Methodology for the Visual Inspection of Selected Engineered Wood Products and Connector Hardware for Prescriptive Non-Compliance at the Pre-Drywall Stage of Residential Construction

John Conrad Bouldin, Jr.

Dissertation submitted to the faculty of Virginia Polytechnic Institute and State University in partial fulfillment of the requirements for the degree of

DOCTOR OF PHILOSOPHY

IN

WOOD SCIENCE AND FOREST PRODUCTS

Joseph R. Loferski, Co-Chair

Daniel P. Hindman, Co-Chair

Franklin E. Woeste

D. Earl Kline

Urs K. Buehlmann

June 29, 2011

Blacksburg, Virginia

Keywords: engineered wood products, inspection, methodology, residential construction

Copyright 2011 John Bouldin. All rights reserved.

Abstract

Methodology for the Visual Inspection of Selected Engineered Wood Products and Connector Hardware for Prescriptive Non-Compliance at the Pre-Drywall Stage of Residential Construction

John Conrad Bouldin, Jr.

The use of engineered wood products (EWP) in residential construction has increased in recent years. Most specifications for the installation of these components are found in proprietary manufacturer literature rather than in the building code. Although some home inspections include EWP prescriptive compliance, very little applied and academic literature addresses this practice. This lack of practical information and the lack of standardized inspection methods can result in undetected non-compliant EWP installations that fail to meet the minimum safety provisions of the building code.

The goal of this project was to develop a visual inspection methodology, associated knowledge base, and software application for the inspection of EWPs and connector hardware (CH) in new residential construction at the pre-drywall stage. The methodology was based upon subject matter expert (SME) inputs and validation was derived from the use of a modified Delphi method that was able to the gather, collate, refine, and validate the research process and outputs based on the expertise of the subject matter experts. The concept of high face validity was used to establish project validity.

Installation problems with EWPs and CH were noted by the SMEs partly because the use and installation instructions for proprietary products are not found in building codes.

Building code officials (BCO) and home inspector (HI) SME responses indicated a need for a methodology and software to aid in the inspection process. Although authoritative reference materials for prescriptive installation are available, the scope of material is not consistent between manufacturers, and is presented in different formats for different brands. The developed software application provides ready access to reference materials needed for EWP and CH installations.

No widely accepted inspection methodology is available, although the HI SMEs used systematic inspection methods. Inspection methods such as the top-down method and sighting along the patterns of repetitious framing elements can improve the detection of non-compliant installations. BCO and HI SMEs identified both component-specific and zone-specific techniques as a part of the systematic inspection methodology. Definable high risk areas for each EWP and CH were identified and the associated inspection methods may help the inspector reduce the incidence of undetected problem areas. Knowledge of the high-risk areas may also enhance the inspection.

The developed software application was found to be a useful inspection tool. BCO and HI SMEs determined that functions of the computer software necessary for use included ease of use, onboard reference materials, specific inspection techniques, prepared comments, and technical illustrations.

Acknowledgements

My love and thanks to my wife Barbie Bouldin, and to our children, John C. Bouldin III, Stephanie Anne Bouldin, Kennon G. Bouldin, and Carolina A. Bouldin for their love, patience, and understanding while I devoted so much attention to my doctoral studies. I give special thanks to my mother, Theresa Bouldin, and my father, John C. Bouldin, Sr. for their constant love and support. I owe my family more than I can say.

I want to express my deepest gratitude to all my advisory committee members, with special thanks to committee co-chairs Dr. Joseph Loferski and Dr. Daniel Hindman. Their professionalism, patience, friendship, and constant encouragement went far beyond what any graduate student had the right to expect. I will always remember and try to emulate the passion they bring to teaching, mentoring, and scholarly research.

To my colleagues and fellow graduate students it has been a pleasure to work with you and I wish you the best in your future pursuits. Thanks to Dr. Frank Woeste and to Dean Paul Winistorfer, Ph.D. who believed in me and encouraged me to enter the Wood Science program. I also thank the Virginia Tech Graduate School and the Department of Wood Science and Forest Products for funding my research and teaching assistantships.

This acknowledgement would not be complete without thanking the special people at the Brooks Forest Products Center at Virginia Tech who make everything possible in our department. To Rick Caudill, the unsung genius and lab specialist whose creativity and patience led to the creation of specialized lab testing and innovative equipment; to Angie Riegel for her happy smile and administrative wizardry; and to David Jones who

was always willing to apply his skill and good humor to help out with any need, with a particular concentration on wood working projects and preparation of specimens for lab testing. It has been a privilege and a pleasure to work with you all.

Finally, I want to thank the members of the subject matter expert panel whose wisdom and willingness to share their knowledge made this project possible.

All photographs were taken by the author.

TABLE OF CONTENTS

Abstract……..……..……ii

Acknowledgements……..…iv

Table of Contents……..…..…vi

Chapters……..……..…..……vi

References……..……..……..……...…..……xii

Appendices……..……..……...….xiii

List of Figures…..……..……..…..……..…..……...xiv

List of Tables……..……..……..……xx

Glossary of Acronyms……..……..……..……xxi

Chapter 1.0 Introduction 1

1.1 The Problem 1

1.2 Goal 4

1.3 Objectives 4

1.4 Scope 5

1.5 Impact 7

1.6 Overview 8

Chapter 2.0 Literature Review 10

2.1 Manufactured Building Components 10
2.1.1 Engineered Wood Products 12
2.1.1.1 I-Joists 13
2.1.1.2 Oriented Strand Board 14
2.1.1.3 Laminated Veneer Lumber 15
2.1.1.4 Parallel Strand Lumber 15
2.1.1.5 Engineered Rim Joists 16
2.1.1.6 Metal Plate Connected Wood Trusses 17
2.1.1.7 Connector Hardware 19

2.2 Need for Construction Standards 20

2.3 Building Codes 21
2.3.1 The *International Residential Code* 22
2.3.2 Engineered Wood Product Specifications in Code Documents 24
2.3.3 The *International Residential Code* Development Process 28
2.3.4 The *International Building Code* 29

2.4 Inspections 30
2.4.1 Inspection Guidelines 32
2.4.2 Inspection Variability 34
2.4.3 Factors Influencing an Inspection 35
2.4.4 Visual Inspections 37
2.4.5 Municipal Code Inspections 37
2.4.6 Home Inspections 41
2.4.7 Non-Destructive Evaluation 45
2.4.8 Performance Condition Assessment Inspections 45

2.5 The Residential Construction Industry 47
2.5.1 Residential Construction Environment 49
2.5.2 Platform Framed Wood Structures 50
2.5.3 Construction Error 52

2.6 Impact of Code Inspection Failure on the Construction Process 55

2.7 Qualitative Research Methods 57

2.7.1 The Delphi Method 58
2.7.1.1 Delphi Procedures 60

2.8 Selection of Experts 62

2.9 Validation Concepts 63
2.9.1 Validation Strategies 66
2.9.2 Paradigms 67
2.9.3 Lenses 68
2.9.4 Member Checking 68
2.9.5 Audit Trail 69
2.9.6 Interview Survey Method 69
2.9.7 Researcher Bias 70

2.10 Summary 70

Chapter 3.0 Methods 71

3.1 Methodology Development 72
3.1.1 Research Procedures 73
3.1.2 Survey Instrument Development 76
3.1.3 Anonymity of Subject Matter Experts 77
3.1.4 Definition and Selection Process for Subject Matter Experts 78
3.1.4.1 Building Code Official Selection 78
3.1.4.2 Home Inspector Selection 79
3.1.4.3 Industry Representative Selection 80
3.1.5 Interviews with Industry Representative Subject Matter Experts 80
3.1.6 First Interviews with BCO and HI Subject Matter Experts 81
3.1.6.1 Spreadsheet Development 83
3.1.7 Second Interviews with BCO and HI Subject Matter Experts 87
3.1.8 Validation 88
3.1.8.1 Member Checking 89
3.1.8.2 Audit Trail 89

3.2 Development of the Inspection Software Application 89
3.2.1 Selection of the Inspection Software Platform 92
3.2.2 Input from Subject Matter Experts 93
3.2.3 Second Expert Interviews 94

3.3 Summary 94

Chapter 4.0 Results and Discussion 96

4.1 Pre-Responders 96

4.2 Methodology Development and Validation 99

4.3 Relevant Component Manufacturers, Risk Areas, and Techniques 101
4.4 The Construction Environment 105

4.4.1 Jobsite Hazards 106
4.4.2 Site Superintendents and Subcontractor Oversight 106
4.4.3 Building Design Concerns 107
4.4.4 Inspector Assumptions 108
4.4.5 Inspector Attitudes 109

4.5 Summary of Expert Contributions 109
4.5.1 Responses to the Survey Questions 110
4.5.2 Expert Comments on General Construction Issues 111

4.6 Inspection Methods 113
4.6.1 Pre-Inspection Planning 115
4.6.2 Delivery of the Report 115
4.6.3 Limitations 116
4.6.4 Look Up 116
4.6.5 Focus Attention 117
4.6.6 Enter Every Accessible Space 117
4.6.7 Use Patterns to Inspect 118
4.6.8 Get as Close to the Inspected Member as Possible 118
4.6.9 Degree of Inspection 118
4.6.10 Locations of Ducting, Piping, and Wiring 119
4.6.11 Mark Observed Conditions 119
4.6.12 Single Components Versus Systems Concerns 119
4.6.13 Zoning Strategy 120
4.6.14 Repairs 120
4.6.15 Cantilevers 120
4.6.16 Shipping, Handling, and Storage 121
4.6.17 Inspection Teams 121
4.6.18 Documentation 122
4.6.19 Tools 123

4.7 Inspection Techniques: Individual Products 124
4.7.1 Component Inspection Process 124
4.7.1.1 Observations 126
4.7.1.2 Document the Problems 126
4.7.2 Metal Plate Connected Wood Trusses 127
4.7.2.1 Bracing 131
4.7.2.2 Bearing 135
4.7.2.3 Repairs 137
4.7.2.4 Leaning and Bowing Trusses 139
4.7.2.5 Base and Cap Trusses 139
4.7.2.6 Multi-Ply Girder Trusses 142
4.7.2.7 Backwards and Upside Down Truss Installations 143
4.7.2.8 Truss Attachments 145
4.7.2.9 Construction Loads 147
4.7.2.10 Handling and Storage 149
4.7.3 I-Joists 151

4.7.3.1 Webs 153
4.7.3.2 Flanges 154
4.7.3.3 Blocking 155
4.7.3.4 Bracing 160
4.7.3.5 Bearing 162
4.7.3.6 Fasteners 164
4.7.3.7 I-Joist Girders 164
4.7.3.8 Sloped End Cuts 166
4.7.3.9 Construction Loads 168
4.7.3.10 Handling and Storage 169
4.7.4 Structural Composite Lumber Beams and Columns 170
4.7.5 Rim Joists 176
4.7.5.1 Bearing 177
4.7.5.2 Improper Rim Joist Materials 180
4.7.5.3 Rim Joist Holes 182
4.7.5.4 Rim Joist Fastener Details 184
4.7.5.5 Handling and Storage 185

4.8 Oriented Strand Board Sheathing 186

4.9 Connector Hardware and EWP Connection Types 188
4.9.1 Face Mount Connectors 188
4.9.2 Top Mount Connectors 190
4.9.3 Connector Pockets 193
4.9.4 Fasteners 195
4.9.4.1 I-Joist Connections to Steel Beams 198

4.10 Inspection Methodology: The Top-Down Method 201
4.10.1 The Attic 206
4.10.1.1 Inspecting Roof Trusses in the Attic 209
4.10.1.2 Inspecting I-Joist Rafters 210
4.10.2 The Upper Level 215
4.10.3 Intermediate and Lower Levels 218
4.10.3.1 Floor Systems 219
4.10.4 Basements and Crawlspaces 219
4.10.5 The Exterior 222

4.11 Computer Software Application 225
4.11.1 Features of the Developed Software Application 227
4.11.2 Use of the Developed Software Application 228

4.12 Summary 234

Chapter 5.0 Summary, Conclusions, and Future Research 235

5.1 Summary 235

5.2 Conclusions 237

5.3 Recommendations for Future Research 239

References **241**

Appendices

Appendix A: Researcher Statement of Potential Bias …… 255

Appendix B: Participant Consent Form …… 263

Appendix C: Survey Questions for Both Interviews …… 271

Appendix D: Original Spreadsheet …… 285

Appendix E: Spreadsheet with Proposed Reorganizations …… 317

Appendix F: Final Reorganized Spreadsheet …… 355

Appendix G: Boise Cascade Details …… 373

Appendix H: Georgia Pacific Details …… 401

Appendix I: iLevel Details …… 422

Appendix J: Jager Details …… 455

Appendix K: Louisiana Pacific Details …… 470

Appendix L: Nordic Details …… 512

List of Figures

Figure 2 - 1: Wood Composite I-Joist 14

Figure 2 - 2: Section of an Oriented Strand Board Structural Panel..... 14

Figure 2 - 3: Laminated Veneer Lumber 15

Figure 2 - 4: Parallel Strand Lumber 16

Figure 2 - 5: Laminated Strand Lumber Rim Joist 17

Figure 2 - 6: Illustration of MPCWT Trusses 18

Figure 2 - 7: Examples of Connector Hardware 19

Figure 2 - 8: The Code Inspection Process 40

Figure 2 - 9: Process After Delivery of the Home Inspection Report 44

Figure 2 - 10: Phase Inspection Process (Sawhney et al., 2005)..... 57

Figure 3 – 1: Methodology Development Process Overview..... 73

Figure 3 – 2: Methodology Development Process Details..... 75

Figure 3 – 3 : Details of the Software Application Development Process.... 91

Figure 4 – 1: Inspection Process for Individual Components 125

Figure 4 – 2: Metal Plate Connected Wood Truss Components 129

Figure 4 – 3: Damaged Web and Gusset Plate in a MPCWT..... 129

Figure 4 – 4: Offset Gusset Plates 130

Figure 4 – 5: Manufacturer Error – Missing Gusset Plate..... 130

Figure 4 – 6: Inspection by Patterns Method – Missing Web 131

Figure 4 – 7: Diagonal Web Bracing 132
Figure 4 – 8: 'T' Web Bracing 133
Figure 4 – 9: Diagonal Gable End Bracing 133
Figure 4 – 10: Missing Lateral Bracing 134
Figure 4 – 11: Example of a Strongback 135
Figure 4 – 12: Split Bottom Chord at Bearing Area 136
Figure 4 – 13: Improper Truss Bearing Support 136
Figure 4 – 14: OSB Gusset Repair 137
Figure 4 – 15: Solid-Sawn Lumber Gusset Repair 138
Figure 4 – 16: Relatively Small Gusset Repairs 138
Figure 4 – 17: Specifications for Truss Leaning and Bowing 139
Figure 4 – 18: Exploded View of Base and Cap Truss Components 140
Figure 4 – 19: Base and Cap Truss Components Assembled 141
Figure 4 – 20: Plan View of Base Truss Top Chord Diagonal Bracing 141
Figure 4 – 21: Racked Base Truss Top Chords 142
Figure 4 – 22: Improper Girder Truss Holes 143
Figure 4 – 23: Floor Trusses Installed Backwards 144
Figure 4 – 24: Floor Truss Installed Upside Down 145
Figure 4 – 25: Detail of an Installation of Tie-Down Hardware 146
Figure 4 – 26: Improper Attachment of Roof Truss Bottom Chord 146
Figure 4 – 27: Concentrated Construction Load on a Floor Truss 148
Figure 4 – 28: Concentrated Construction Load on Two Roof Trusses 148
Figure 4 – 29: Improper Support Beneath Stored Trusses 149

Figure 4 – 30: Improper Floor Truss Handling and Storage 150

Figure 4 – 31: Improper Roof Truss Handling and Storage 151

Figure 4 – 32: Damaged I-Joist Cantilevered Girder 152

Figure 4 – 33: Proper Face Mount Installation 156

Figure 4 – 34: Web Stiffeners Used with Connector Hardware 157

Figure 4 – 35: Squash Blocking Height Detail 157

Figure 4 – 36: Squash Blocking Beneath a Perpendicular Bearing Wall ... 158

Figure 4 – 37: Squash Blocking Height Detail Installed 158

Figure 4 – 38: I-Joist Blocking Beneath a Perpendicular Bearing Wall..... 159

Figure 4 – 39: Panel Blocking Beneath a Perpendicular Bearing Wall 159

Figure 4 – 40: Steel Strap Cross Bracing Incorrectly Installed 161

Figure 4 – 41: Prefabricated Lumber Cross Bracing 161

Figure 4 – 42: Unbalance Bearing Support – I-joist Rests on Wedge 162

Figure 4 – 43: Insufficient Bearing Surface 163

Figure 4 – 44: Squash Blocking Should Divert Load Around I-Joists 163

Figure 4 – 45: Filler Blocking Showing Fasteners 164

Figure 4 – 46: Proper Width of Filler Blocking 165

Figure 4 – 47: Typical Allowable I-joist Sloped End Cut 167

Figure 4 – 48: Allowable I-Joist Rafter Sloped Cuts 167

Figure 4 – 49: Potential Effect of a Concentrated Load on an I-Joist 168

Figure 4 – 50: I-Joists Oriented with the Webs Vertical 169

Figure 4 – 51: Broken I-Joists Due to Improper Handling and Lifting 170

Figure 4 – 52: Cupped and Splayed Beams 171

Figure 4 – 53: Example of a Fastening Pattern for a Multi-Ply Girder 172

Figure 4 – 54: Properly Supported Concentrated Load Under a Beam 172

Figure 4 – 55: Beam Top Strap at Double Top Plate..... 173

Figure 4 – 56: Double Top Plates Must Provide Continuity Over a Beam . 173

Figure 4 – 57: Insufficient Beam Bearing Surface 174

Figure 4 – 58: Missing Column Under Beam..... 174

Figure 4 – 59: Offset Columns – Discontinuous Load Path..... 175

Figure 4 – 60: No Footer Beneath a Bearing Column 175

Figure 4 – 61: Beam Cut Away at Bearing Surface..... 176

Figure 4 – 62: Rim Joist Overhangs the Foundation Wall 178

Figure 4 – 63: Rim Joist Overhangs the Garage Foundation Wall 178

Figure 4 – 64: Typical Detail of I-Joist System with Engineered Rim Joist 179

Figure 4 – 65: Typical Detail of an I-Joist System with Point Load 179

Figure 4 – 66: Wrong Rim Joist Material – Cut too Short 180

Figure 4 – 67: Sawn Lumber Rim Joist Before Wood Shrinkage 181

Figure 4 – 68: I-Joist Floor After Sawn Lumber Rim Joist Shrinkage 181

Figure 4 – 69: Hole Specifications for Rim Joists Over Openings 182

Figure 4 – 70: Fastening Details for Rim Joist Corner..... 183

Figure 4 – 71: APA Allowable Hole Sizes and Locations for Rim Joists.... 183

Figure 4 – 72: Rim Joist Subfloor and Sill Plate Nailing 184

Figure 4 – 73: Rim Joist Toe Nailing Specifications 185

Figure 4 – 74: OSB Subfloor Installation 187

Figure 4 – 75: Typical Short Height Face Mount Hanger Installation 189

Figure 4 – 76: Typical Full Height Face Mount Hanger Installation 189

Figure 4 – 77: Out of Plumb Hanger – Raised I-Joist 190

Figure 4 – 78: Correct Top Mount Hanger Installation..... 191

Figure 4 – 79: Toe Nailing Caused Top Mount Hanger Spread 191

Figure 4 – 80: Toe Nailed Installation Side View 192

Figure 4 – 81: Spread Top Mount Hanger Installation..... 192

Figure 4 – 82: Excessive Gap at Back of Hanger Pocket..... 193

Figure 4 – 83: Wrong Hanger for the Supported Member 194

Figure 4 – 84: Wrong Hanger - too Short and No Web Stiffeners 194

Figure 4 – 85: Hangers with Missing Fasteners 196

Figure 4 – 86: New Holes in Hanger Prohibited 197

Figure 4 – 87: Dimpled Hanger Flanges - Overdriven Nails 197

Figure 4 – 88: Proper I-Joist-to-Steel Beam Hanger Connection 199

Figure 4 – 89: Improper Connection - Nailer Plate is too Narrow 199

Figure 4 – 90: Improper Connection - Nailer Plate is too Thin..... 200

Figure 4 – 91: Improper Connection - Nailer Plate is too Wide 200

Figure 4 – 92: The Top-Down Inspection Process Overview 202

Figure 4 – 93: Detailed Top-Down Inspection Process 203

Figure 4 – 94: Typical Roof Truss View from Attic..... 210

Figure 4 – 95: Bearing Ridge Beam Supporting I-Joist Rafters..... 211

Figure 4 – 96: I-Joist Rafter Connection Rests on Top of Ridge Beam 212

Figure 4 – 97: I-Joist Rafter Connection Attached to Side of Ridge Beam 213

Figure 4 – 98: I-Joist Rafter Connection Types at the Lower Ends 213

Figure 4 – 99: Improper Seat Cuts at Lower Ends of I-joist Rafters 214

Figure 4 – 100: Example of a Proper Cantilever Installation 216

Figure 4 – 101: Improper Cantilever – I-Joist Rests Over Opening..... 221

Figure 4 – 102: Exterior House Wrap Obstructs a Visual Inspection..... 223

Figure 4 – 103: Software Development Overview 226

Figure 4 – 104: Detailed Process for Using Software..... 229

Figure 4 – 105: Overview of How to Use the Software Application 231

Figure 4 – 106: Screenshot of the Application Component Panel 231

Figure 4 – 107: Screenshot of the Problem Area Selection Panel 232

Figure 4 – 108: Panel Showing Comment Selections 232

Figure 4 – 109: Panel Showing One of the Provided Illustrations 233

Figure 4 – 110: Software Application Inspection Techniques Panel..... 233

List of Tables

Table 2 - 1: Inspection Performance Factors 36

Table 2 - 2: Matrix for Choosing Qualitative Validation Procedures 67

Table 3 - 1: SME Responses to Question Five 84

Table 3 - 2: Reasons for Revisions of Responses to Question Five 86

Table 3 - 3: Reorganized Final Responses to Question Five 87

Table 4 - 1: Components and Manufacturers Selected for this Project 102

Table 4 - 2: Component High-Risk Aspects 104

Table 4 - 3: Inspection Techniques Matrix 105

Table 4 - 4: Summary Survey Responses From the SMEs 111

Table 4 - 5: Summary of Construction Issue Responses from the SMEs 112

Glossary of Acronyms

ANSI	American National Standards Institute
APA	APA – The Engineered Wood Association
ASTM	American Society for Testing and Materials
BCO	Building Code Official
BCSI	*Building Component Safety Information*
CH	Connector Hardware
EWP	Engineered Wood Product
HI	Home Inspector
IBC	*International Building Code*
ICC	International Code Council
IR	Industry Representative
IRC	*International Residential Code*
LSL	Laminated Strand Lumber
LVL	Laminated Veneer Lumber
MPCWT	Metal Plate Connected Wood Truss
NAHB	National Association of Home Builders
NDS	*National Design Specification for Wood*
OSB	Oriented Strand Lumber
PSL	Parallel Strand Lumber
SCL	Structural Composite Lumber
SST	Simpson Strong-Tie
SME	Subject Matter Expert
TPI	Truss Plate Institute

USP	United Steel Products
WTCA	Wood Truss Council of America

1.0 Introduction

The use of engineered wood products (EWPs) has found wide acceptance in residential construction, resulting in a 282% increase in the use of EWP between 1995 and 2006 (NAHB, 2008). The manufacture of EWPs randomizes natural characteristics found in solid-sawn lumber (such as knots and sloped grain) so that the resulting product is more homogeneous and may exhibit a higher degree of dimensional stability, strength, and stiffness than similar sawn wood components (Fridley, 2002). Compared with sawn lumber, EWPs require less raw wood fiber resources, can be manufactured from smaller and plantation grown trees, and may incorporate wood fiber from trees that previously had little commercial value (APA, 2010b). Connector hardware (CH) is often necessary to ensure the proper installation of EWPs. Connector hardware are proprietary products requiring manufacturer-specific installation procedures, and are therefore included in the research.

1.1 The Problem

Due to the proprietary nature of many EWPs and CH, there is a lack of uniform standards between different manufacturers for installation and use. Differences in geometry and material properties between sawn lumber and EWPs require that appropriate construction methods be used for each type of component. If installation

methods developed for use with sawn lumber are improperly applied to EWP installations, the improper installation methods could compromise the EWPs" ability to carry designed service loads. Commentary from the 2009 IRC (ICC, 2010a) states, "cutting and notching limitations for sawn lumber do not apply to engineered wood products". Van Note, writing in the 2009 edition of *Significant Changes to the International Residential Code* (Van Note, 2010), states that "Installation of EWPs must conform to the manufacturer"s installation instructions". Many SCL and EWP products require the use of specialized proprietary CH for installation.

Bodig (2005) writes, "…we need to refocus our development effort of engineered wood structures to their installation and maintenance, instead of continuing to develop newer, more exotic products the long-term performances of which are not yet understood". Industry has expressed concern over construction and inspection-related needs. Engineered wood products are typically well designed and professionally manufactured with built-in quality, but installation problems could affect performance.

In support of the need to address EWP installation issues, Atkinson (1998) raises similar concerns and comments that efforts to minimize construction errors tend to focus on technological solutions, when a better line of inquiry would be to concentrate on why known technology (such as EWP) is not being applied properly. EWP installation issues can be further compounded because manufacturer specifications for similar-looking EWPs may vary among brands. Atkinson (1998) notes, "For often repeated actions, there is a tendency for the individual to apply rules that have worked in the past. Errors might occur in such situations as where too much information is being received and a

wrong rule is applied in panic". Atkinson (1998) further comments that poor drawings and specifications are a „communication" type error that may play a role in construction defects - "defects and their mode of correction, together with the basic sciences involved, are repeated continually, and often involve traditional technology as well as newer designs. Such communication error supports the view that errors of application rather than technical factors are to blame for most defects" (Atkinson, 1998). Powell, Tilotta, and Martinson (2008) conducted a survey of industry professionals to assess research and technology transfer needs to improve housing in the United States. Among other priorities, inspection-related topics were identified as important areas for further research as follows:

1) Develop inspection guidelines for each stage of construction illustrating compliant and non-compliant examples.
2) Develop methods to incorporate material installation instructions into the home inspection process

Recognition of the need for an enhanced inspection methodology justifies this project in that construction errors do occur, and the inspection professions would benefit from established inspection guidelines with examples of non-compliance, and to enable professionals such as home inspectors access to material installation requirements.

1.2 Goal

The goal of this research is to develop an expert-validated visual inspection methodology, associated knowledge base, and software application for selected engineered wood products and connector hardware for prescriptive non-compliance at the pre-drywall stage of new residential construction. During the pre-drywall stage of construction, there is no insulation, wallboard, or other finish materials to obstruct the view of the framing

1.3 Objectives

The objectives of this research were:

1) To develop an inspection methodology for engineered wood products and connector hardware and a component-specific knowledge base including:

    a. The most prevalent brands and types of engineered wood products and connector hardware used in residential construction in the specified geographic region

    b. Specific aspects of the components at high risk for prescriptively non-compliant installation

    c. Authoritative reference source documentation required for the selected components

d. Generalized and specific techniques needed for engineered wood products and connector hardware and for physical locations (or zones) in the house

e. Validation of the developed methodology and the computer software.

2) To develop an inspection software application to incorporate the above methodology and knowledge base into a prototype.

1.4 Scope

The scope of the project was defined as follows.

1. Selected manufactured products:
   a. Wood composite I-joists
   b. Laminated veneer lumber (LVL) and parallel strand lumber (PSL) beams and columns
   c. Oriented strand board(OSB) sheathing and subflooring
   d. Metal plate connected wood trusses (MPCWT)
   e. Laminated strand lumber (LSL) and LVL rim joists
   f. Selected connector hardware (CH).
2. Dwelling types:
   a. One-and two-family wood framed dwellings
3. Property, location, and environmental conditions:

a. The structure is site-built using platform framing

b. Located within the Commonwealth of Virginia

c. Wind speed zone of less than or equal to 90 mph[1]

d. Ground snow load of less than or equal to 25 pounds per square foot

e. Seismic design regions identified in the IRC as categories A and B

f. Outside of any designated flood zones

4. Inspection limitations:

   a. Visual inspection using no special tools beyond simple hand tools such as tape measures, flashlights, ladders, etc.

   b. A single site visit

   c. Selected EWP and connector hardware that is installed inside the house (dry use) that are subject to manufacturer prescriptive standards

   d. As-built inspection with no building plans or engineering reports available for review

   e. The pre-drywall stage of construction (the framing is complete, along with all roughed-in utilities –(no insulation, finished flooring or wall covering present)

   f. Inspector performs no structural analysis and provides no repair specifications

5. Determination of non-compliance of EWP installations:

   a. Prescriptive specifications manufacturer recommendations

   b. ANSI/TPI 1 (ANSI/TPI, 2007)

[1] A portion of one of one geographic region falls under a ≤ 100 mph zone.

c. Documentation from other authoritative industry standard-setting organizations.

6. Role of the inspector:
    a. Does not attempt to enforce building codes
    b. Will apply prescriptive specifications to observed EWP and CH conditions.
    c. Does not practice any other licensed professions such as architecture, engineering, or real estate.

This project concentrates on the inspection of EWPs, but EWPs do not exist by themselves in a building. Standard code provisions for the supporting structure of each EWP are as important as the pre-engineered wood component (Morse-Fortier, 2008). The developed inspection methodology will include inspection techniques for supporting structures such as LVL and PSL supporting beams, columns, and blocking.

1.5 Impact

The expert-validated methodology will provide a field-ready software application and aggregation of authoritative reference sources that may be applied during jobsite inspections. This application will improve the inspection process, enhance the likelihood of detecting prescriptively non-compliant EWP installations, and serve as an inspection training resource. Increased detection of EWP installation errors will directly benefit public safety by improving compliance with the minimum safety standards mandated by manufacturers and applicable codes. Intended users include professional residential inspectors, registered design professionals, and builders. Future expansions

of this methodology may be developed to include additional housing systems such as solid-sawn lumber framing, electrical systems, plumbing systems, footers, and foundations.

1.6 Overview

The following chapters detail the development and validation of the inspection methodology.

Chapter 2 contains a discussion of literature related to building codes, manufactured construction products, inspection types, the construction industry and environment, and research concepts.

Chapter 3 describes the research methods chosen and provides a detailed discussion of the methodology development process, the validation process, and the development of the software application.

Chapter 4 presents the research findings, discussion of the results, and the developed software application.

Chapter 5 contains the summary and conclusions of the project, and recommendations for future research.

Chapter 6 provides the references cited in the project.

The Appendices contain support material for the dissertation, including illustrations, tables, spreadsheets, and source documents. All illustrations, flowcharts, and photographs are the original work of the author, except as otherwise noted. The author reserves all rights to the ownership and use of all original works.

2.0 Literature Review

This literature review identifies and describes the selected manufactured components, and summarizes the current information, methods, and tools available for general types and approaches to visual inspection. Specific areas discussed include building codes, the unique nature of engineered wood products and connector hardware, and the roles of code enforcement and home inspections in new residential construction. Other topics include the construction environment, the impact of failed inspections on the construction process, and research methodology concepts and validation procedures.

2.1 Manufactured Building Components

Consumers may perceive installation errors to be problems with wood products in general. This confusion may create a false impression that wood and engineered wood products (EWP) are inferior building materials and are inherently problematic. This misconception could affect the degree of public confidence in EWPs:

> Should a wood construction fail, the general public perception is that this is an expected consequence arising from the use of wood. The blame is placed on the material and not on the designer and/or builder, even if the cause of the problem is inappropriate use, incorrect detailing, or a building mistake (Foliente, Leicester, Wang, Mackenzie, & Cole, 2002).

Prior research has documented the negative impact on building performance arising from undetected construction errors (Lebeda, Gupta, Rosowsky, & Dolan, 2005; Girhammar & Kallsner, 2008). Readling (2008) documents and discusses a variety of non-compliant EWP installations and describes them as “correctable errors made by the builder”. Types of EWP non-compliant installations have been documented from field experiences in code inspecting and in home inspecting of new residential dwellings (Bouldin & Showalter, 2008).

Builder management practices can influence the quality of home construction, as noted by PATH/NAHB (2003): “There is uneven quality of construction. Builders sometimes choose subcontractors based on whether they have insurance or the price of their work, not the quality of their work or the way they run their businesses. Trade contractors use inconsistent construction processes, making quality difficult to achieve for the builder”. Building construction errors can entangle builders in lawsuits. Insurance companies that provide liability coverage to builders have noted an increase in claims against builders based on construction defects (Neumeister, 2006). One expert from the truss manufacturing and EWP product distribution industry stated that EWP installation problems often result in costly callbacks to the fabricator and the distributor.

Due to the proprietary nature of many EWPs and CH, there are no uniform standards between different manufacturers for installation and use. Differences in geometry and material properties between sawn lumber and EWPs require that appropriate construction methods be used for each type of component. If installation methods developed for use with sawn lumber are improperly applied to EWP installations they could compromise the EWPs‟ ability to carry designed service loads.

All manufactured products and installation methods used in residential structures must be approved by the building code official, who often relies on evaluation service reports (ESRs) for assurance that products comply with provisions of the building code (ICC, 2010a). ESRs are prepared by the International Code Council Evaluation Service (ICC-ES) or other third party approval agencies based on testing of the characteristics of each manufacturer‟s products. These reports specify installation parameters, and provide building officials with documentation to aid in the process of determining appropriate product use in their jurisdictions without requiring a specific engineering design. Products and practices that do not have ESRs or significantly deviate from ESR practices may be permitted for use in buildings, but must be sealed by a registered design professional.

2.1.1 Engineered Wood Products.

EWPs include a wide variety of wood products enhanced by man-made processes, many of which are proprietary. In this project, EWPS include I-joists (wood composite structural members that resemble the capital letter „I‟in cross section), oriented strand board (OSB), structural composite lumber (SCL) products, engineered rim joists, and metal plate connected wood trusses (MPCWT). SCL products include laminated veneer lumber (LVL), parallel strand lumber (PSL), and laminated strand lumber (LSL) (Nelson, 1997). SCLs are composite structural units manufactured from optimally oriented wood strands, veneers, lumber, or other wood fiber combined with exterior-grade adhesives hot pressed together (ASTM, 2005). SCL products are formed from small sections of wood fiber to randomize the natural characteristics of sawn lumber such as knots and sloped grain, providing a more homogenous product. This homogeneity of material

produces more predictable performance characteristics, which is important to design professionals, building officials and the end user (APA, 2007). A common characteristic of SCLs is that the majority of wood fibers are oriented along the longitudinal axis of the component (ASTM, 2005). The following sections describe the selected manufactured products addressed in this project.

2.1.1.1 I-Joists.

Wood composite I-joists consist of top and bottom flanges connected by structural panel webs and bonded together by exterior-grade adhesives. I-joists are commonly used as floor joists, blocking, rimjoists, and roof rafters (APA, 2007). I-joists are lightweight, and can be easily handled at the jobsite. The “I” configuration provides high bending strength and stiffness characteristics (APA, 2010a). Solid-sawn lumber or laminated veneer lumber (LVL) materials are used for the flanges. Web materials are plywood or oriented strand board (OSB) (APA, 2010a; ASTM, 2002; ASTM 2005). Figure 2 – 1 depicts a typical I-joist with LVL flanges and OSB web material.

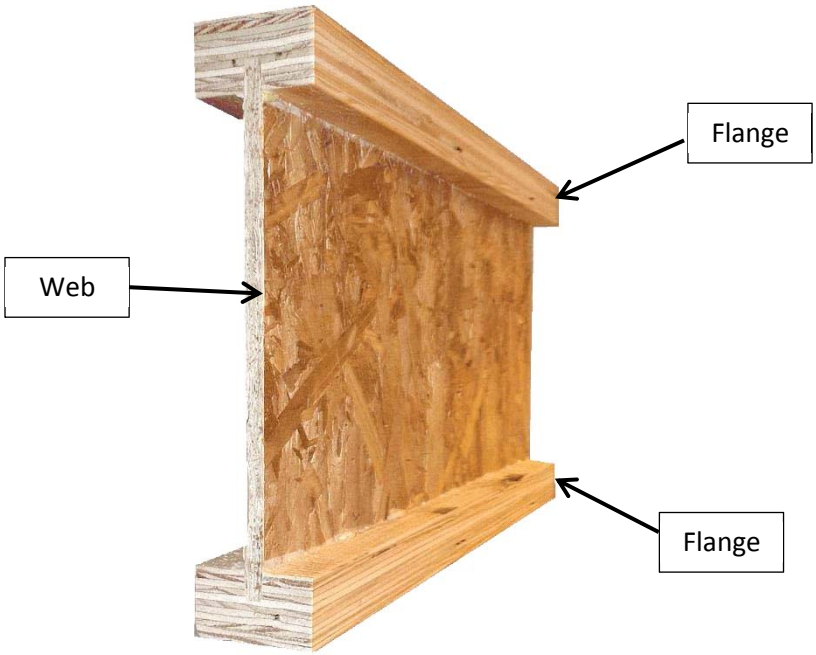

Figure 2 - 1: Wood composite I-joist.

2.1.1.2 Oriented Strand Board.

Oriented strand board (OSB) is a structural panel manufactured from multiple cross-ply layers of wood strands. The manufacture of OSB is similar to plywood in that the layering of each ply (or mat) is perpendicular to the preceding layer (APA, 2010a). Each wood strand OSB is approximately three to four inches long. OSB sheathing is typically used for exterior sheathing, roof sheathing, and subflooring (APA, 2010a). Figure 2 – 2 depicts a close up view of an OSB section.

Figure 2 - 2: Section of an oriented strand board structural panel.

2.1.1.3 Laminated Veneer Lumber.

Laminated veneer lumber (LVL) (Figure 2 – 3) consists of thin wood veneers (veneer thickness shall not exceed ¼ inches) (ASTM, 2005) bonded together into a billet, which is then cut to size. In most cases, the grain of the veneers is parallel to the long direction. LVLs are often used as headers and beams, hip and valley rafters, scaffold planking, and flange material for prefabricated wood I-joists (APA, 2007; APA, 2010a).

Figure 2 - 3: Laminated veneer lumber.

2.1.1.4 Parallel Strand Lumber.

Parallel strand lumber (PSL) (Figure 2 – 4) consists of long parallel veneer strands generally oriented parallel to the length axis, and are bonded together with a durable adhesive. The length-to-thickness ratio of the strands is around 300 (APA, 2007).

PSLs are used for column, beam and header applications where high bending strength is needed (APA, 2010a).

Figure 2 - 4: Parallel strand lumber.

2.1.1.5 Engineered Rim Joists.

Typically made of LSL, engineered rimjoists form a continuous band around the perimeter of a joist floor system. Rimjoists are used to secure the ends of the floor joists (particularly I-joists) to prevent racking, serve as a surface for edge nailing of subfloor and exterior wall sheathing, and to serve as a structural member to resist vertical and lateral loads (APA, 2009). LSL engineered rimjoists are made from flaked wood strands that have a length-to-thickness ratio of approximately 150 (APA, 2007). An LSL rimjoist is shown in Figure 2 - 4.

Figure 2 - 5: Laminated strand lumber rim joist.

2.1.1.6 Metal Plate Connected Wood Trusses.

Metal plate connected wood trusses (MPCWT) are engineered structural units comprised of chords (outside perimeter members), webs (the horizontal, vertical, or diagonal members inside the chords), and gusset plates (usually prefabricated toothed metal plates that join the wooden members together) (EWPA, 2010) (Figure 2 – 5 illustrates a roof truss and a floor truss). MPCWTs are constructed of structural members designed and constructed to carry design loads to reaction bearing points. MPCWTs come in a wide variety of shapes, and are designed for specific applications. The most common roof trusses are triangularly shaped, and floor trusses are flat using parallel top and bottom chords.

Unlike proprietary EWPs, the manufacture of MPCWTs is not proprietary. The standard for production, proper handling, bracing, and installation of MPCWTs is the *American*

National Standards Institute/Truss Plate Institute 1 (ANSI/TPI 1) (ANSI/TPI, 2007) and the *Building Component Safety Information* (BCSI, 2008) (a joint publication of the Wood Truss Council of America and the Truss Plate Institute). In addition, The *Wood Frame Construction Manual for One- and Two-family Dwellings* (ANSI/AF&PA, 2001) is a code-referenced document that provides sample prescriptive span charts for MPCWT floor joists, but cautions that manufacturer specifications should be used instead of generalized prescriptive recommendations.

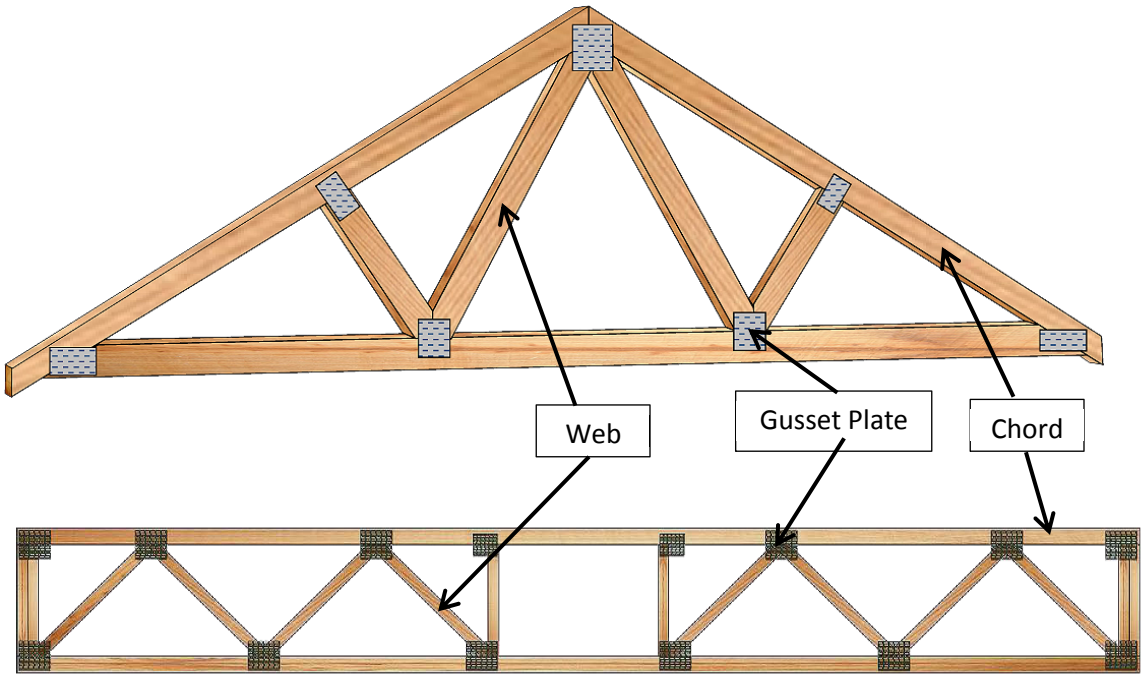

Figure 2 – 6: Illustration of MPCWT trusses. Roof truss (top), and a parallel chord MPCWT floor truss (bottom).

Once the trusses arrive at the job site, the contractor is responsible for the MPCWTs. The contractor must inspect the trusses to ensure that design specifications are met (documentation provided by the truss manufacturer helps in this process), trusses are free from manufacturing defects, and are properly stored and installed onsite (BCSI, 2008).

2.1.1.7 Connector Hardware.

Connector hardware (CH) products are proprietary and their use and installation is governed by manufacturer specifications in the same manner as proprietary EWPs. Some CH manufacturers provide extensive details on use and installation, and some EWP manufacturers specify individual models of CH suitable for use with their products.

Both the EWP manufacturer and the CH manufacturer literature should be consulted for the proper uses of CH. Joist connectors for EWPs are fabricated from steel and are used to support the ends of EWPs. The two basic styles of CH are top mounted and face mounted as shown in Figure 2 – 6.

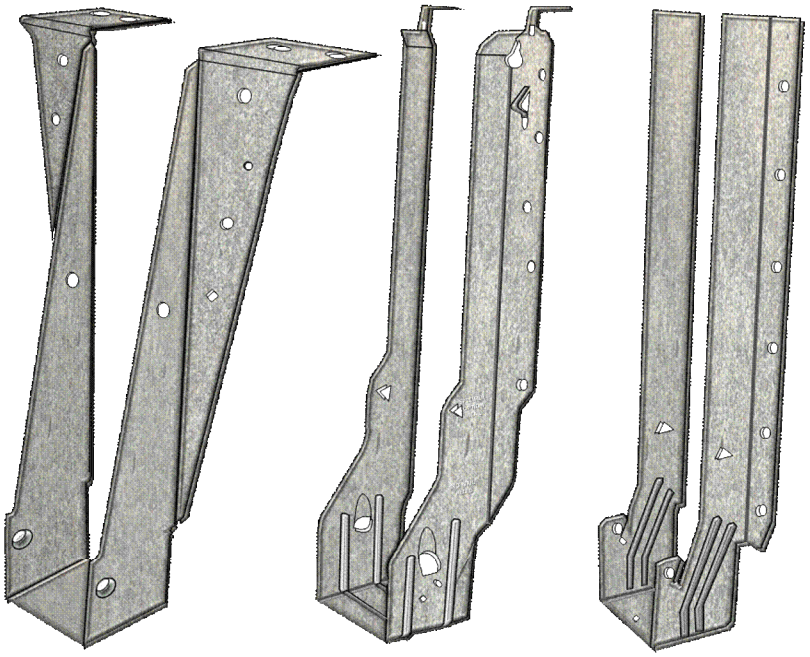

.

Figure 2 - 7: Examples of connector hardware. The illustration on the left depicts a top mounted connector, and the illustrations at the center and the right illustrate two different face mount connector styles.

2.2 Need for Construction Standards

The need to address the safety of building occupants has brought about the development and implementation of building codes. The need for improved building safety has been recognized for centuries, and catastrophic events such as tornadoes and earthquakes are often the impetus for development of building codes for residential housing in the United States. Suaris and Kahn (1995) summarized lessons learned from construction failures that occurred during hurricane Andrew. They concluded that non-compliance with prescriptive building code standards resulted in most failure events in residential structures.

Rosowsky and Ellingwood (2002) suggested that construction design and methods have improved because of forensic analysis of structural failures due to these natural disasters:

> Recent trends in building construction have highlighted the need for improved methodologies for engineering new light-frame structures for housing and techniques for condition assessment of existing structures. The aftermath of natural disasters during the past decade, the rapid evolution of design and construction methods, and heightened expectations on the part of the public and its scrutiny of perceived and actual deficiencies in codes and code enforcement have further underscored these needs (Rosowsky & Ellingwood, 2002).

2.3 Building Codes

Model codes provide a recognized framework for building codes, but are not legally enforceable. Model building codes serve as the basis for state and/or local municipalities to develop legally enforceable building codes (called adopted building codes). These adopted building codes become the legally binding documents within each political entity for accepted building and installation procedures. Applicants for new construction permits must meet the building department requirements for fees, plans, and other document submissions in order to commence the project. Periodic inspections are required to fulfill the terms specified in the building permit approval process. The building code official has authority to delegate duties and responsibilities to other officials to aid in this process. Model building codes are generally updated on an ongoing basis, which should result in increased improvements to newly built housing stock, but may also increase the complexity of code provisions over time. Enforcement of building code requirements is only applicable to new construction, and permitted remodeling projects. There are jurisdictions that have no building codes at all. For example, many counties in Mississippi are not required to adopt building codes for residential properties (BCAP, 2011).

Building codes can be divided into two main categories: prescriptive codes and performance codes. Prescriptive codes provide guidelines for construction based largely on the historical performance of building structures, rather than specific design of individual structures. A performance code defines the minimum performance

specifications that the building and its associated components must meet, and relies on specific architectural or engineering design to accomplish the performance objectives.

Prescriptive building codes offer an advantage because they provide for a streamlined process to design and build homes by enabling individuals who are not licensed registered design professionals (RDPs) to design and build structures. Building permit applicants may design a dwelling using the tables, chart, graphs, and instructions provided in the prescriptive code without the need for an RDP. However, prescriptive codes are not always seen as an advantage in this respect.

Most light-frame wood dwellings are built using prescriptive construction standards, and have not been fully evaluated by an architect or an engineer (Ellingwood, Rosowsky & Pang, 2008; Morse-Fortier, 2008). Some homes contain both prescriptive building methods and materials along with some engineered components. Morse-Fortier (1997) offers an interesting perspective on prescriptive building codes based on a review of structural damage from hurricane Andrew.

A performance building code differs from a prescriptive building code. Performance building codes specify the minimum performance requirements that the building and its associated components must meet, and relies on specific architectural or engineering design to accomplish the performance objectives.

2.3.1 The *International Residential Code.*

The *International Residential Code® for One- and Two-Family Dwellings* (IRC) (ICC, 2010a) is the most widely used model building code in U.S. residential construction.

The 2009 version is cited throughout this project. IRC section R101.3 defines its purpose:

> The purpose of this code is to provide minimum requirements to safeguard the public safety, health, and general welfare through affordability, structural strength, means of egress facilities, stability, sanitation, light and ventilation, energy conservation and safety to life and property from fire and other hazards attributed to the built environment (ICC 2010a).

The IRC is a prescriptive code that provides tables, maps, guidelines, and instructions for the design and construction of a dwelling using materials such as dimension lumber, steel, and concrete. When the prescriptive design and construction parameters are adhered to, there is no need for specific architectural or engineering design of the dwelling to satisfy the building code official. Regardless of the types of building components used, IRC Section R301 provides a definition of the concept of prescriptive standards, and specifies standards that all construction must meet:

> Buildings and structures, and all parts thereof, shall be constructed to safely support all loads, including dead loads, live loads, roof loads, flood loads, snow loads, wind loads and seismic loads as prescribed by this code. The construction of buildings and structures in accordance with the provisions of this code shall result in a system that provides a complete load path that meets all requirements for the transfer of all loads from their point of origin through the load-resisting elements to the foundation. *Buildings and structures constructed*

as prescribed by this code are deemed to comply with the requirements of this section [emphasis added] (ICC, 2010a).

Section R301.1.3 addresses designs that fall outside of the prescriptive parameters of the IRC:

> When a building of otherwise conventional construction contains structural elements exceeding the limits of section R301 or otherwise not conforming to this code, these elements shall be designed in accordance with accepted engineering practice. The extent of such design need only demonstrate compliance of non-conventional elements with other applicable provisions and shall be compatible with the performance of the conventional framed system. Engineered design in accordance with the *International Building Code* (IBC) (ICC, 2010b) is permitted for all buildings and structures, and parts thereof, included in the scope of this code (ICC, 2010a).

Relatively little specific information for installing engineered wood products (EWPs) is found in the IRC, however, there are guiding principles for installation of all structural members. The IRC defers to and incorporates by reference the individual manufacturer recommendations for proprietary EWPs (ICC, 2010a). Therefore, non-compliance with manufacturer prescriptive standards may result in a code inspection rejection.

2.3.2 Engineered Wood Product Specifications in Code Documents

Despite the foregoing discussion, the IRC does contain some useful information for EWPs. Section R104.11 allows the use of “alternative materials, designs, and methods of construction and equipment”. Authority to accept such alternatives is delegated to

the building official (who may require third-party reports such as Evaluation Service Reports (ESRs), or that the performance-based provisions of the *International Building Code* be met. EWPs are listed and labeled as defined in section 202 of the IRC (ICC, 2010a). „Listing" and „labeling" mean that the product is inspected by an approved third-party inspection agency, and meets identified standards or has been tested and found suitable for a specified purpose.

The IRC recognizes certain outside standards as acceptable for use in the code, such as ASTM D 5055 *Standard Specification for Establishing and Monitoring Structural Capacities of Prefabricated Wood I-Joists* (ASTM, 2002). It requires prefabricated I-joists to meet the structural and design provisions in accordance with ASTM D 5055. Paragraph 12 in ASTM D 5055 confirms that manufacturer recommendations are required for proper I-joist installation:

> Proper installation instructions or drawings shall accompany the product to the final jobsite. They shall include any special instructions required for the product, and weather protection and handling requirements. In cases where web reinforcement and attachment requirements, and web hole cutting limits are not covered by adequate general notes, standards sketches and charts shall be included with the installation instructions, or specific job drawings shall properly cover these requirements (ASTM, 2002).

The following sections of the IRC (ICC, 2010a) illustrate the provisions related to the use of EWPs.

1. IRC section 104.11 : Alternative materials, design, and methods of construction and equipment
    a. Code does not prevent installation of alternative materials or prohibit any design or method of construction provided such alternatives have been *approved* (acceptable to the building official).
    b. Alternative methods, etc. shall be approved by code official when it is equivalent to this code.

2. EWPs are *listed and labeled* as defined in IRC section R202.
    a. Labeled includes stamps of third party inspection agencies that test, inspect, or conduct product evaluation of the labeled product. Product meets identified standards or has been tested and found suitable.
    b. Listed means that the product is found in a list maintained by an „organization acceptable to code officials". Listing states that the product meets identified standards or has been tested and found suitable.
    c. Manufacturer's Installation Instructions: Printed instructions included with equipment as part of the conditions of listing and labeling. The definition of equipment does not include materials, products, and services referenced under the definitions of listed and labeled. However, „equipment" is defined as "All piping, ducts, vents, control devices and other components of systems other than appliances that are permanently installed and integrated to provide control of environmental conditions for buildings. This definition shall also include other systems specifically regulated in this code" (ICC, 2010a).

3. IRC sections R502.8.2 and 802.7.2 address floor and roof/ceiling structures and incorporates EWP manufacturer specifications into the building code:

> Cuts, notches, and holes bored in trusses, structural composite lumber (SCL), structural glue-laminated members, or I-joists are prohibited except where permitted by the manufacturer"s recommendations or where the effects of such alterations are specifically considered in the design of the member by a registered design professional (RDP) (ICC, 2010a).

Further, sections R502.7 and R502.7.1 specify that all EWP lateral restraint at supports and bridging is exempted from IRC prescriptive requirements and must be done in accordance with manufacturer recommendations. IRC section R802.7.2 has similar restrictions as R502.8.2 on uses and modifications of EWPs used in roof/ceiling assemblies.

4. IRC Section R502.11.1 (ICC, 2010a) discusses metal plate connected wood trusses (MPCWT) used in flooring applications, and R802.10.4 addresses roof/ceiling trusses. Truss alterations are prohibited unless designed by a registered design professional (RDP). In the absence of any other specifications, R502.11.2 requires that bracing meet the *Building Component Safety Information Guide* (BCSI, 2008) requirements. Further guidance is provided for MPCWTs. The IRC addresses MPCWTs in sections R502.11.3 and R 802.10.4. The language found in these two sections is very similar, but not identical. R 502.11.3 states: "Truss members and components shall not be cut, notched, spliced, or otherwise altered in any way without the approval of a registered

design professional". Section R 802.10.4 reads: "Truss members shall not be cut, notched, drilled, spliced, or otherwise altered in any way without the approval of a registered design professional". It is interesting to note that the roof-ceiling section (R 802.10.4) differs from the floor section (R502.11.3) in that it deletes reference to truss „components", and adds a restriction against „drilling" truss members.

The *National Design Specification for Wood Construction* (NDS) (AF&PA, 2005) is another reference source recognized by the IRC, and the NDS refers the reader to manufacturer literature for information on I-joist bearing, notching, web holes, load application, deflection values, and other properties for EWPs.

These IRC specifications demonstrate that prescriptive building codes cannot directly address every proprietary product used in residential construction. However, EWPs must meet the minimum code standards for any building material, and the IRC provides the means to incorporate brand-specific third-party literature.

2.3.3 *The International Residential Code* Development Process.

The IRC is revised through a consensus process that follows a defined procedure based on *ANSI Essential Requirements: Due Process Requirements for American National Standards* (ANSI, 2010) and internally developed processes (ICC, 2005a; ICC, 2005b). The ANSI definition of consensus "means substantial agreement has been reached by directly and materially affected interests categories [*sic*]. This signifies the concurrence of more than a simple majority, but not necessarily unanimity. Consensus

requires that all views and objections be considered and that an effort be made toward their resolution" (ANSI, 2009). The IRC is updated regularly, with new editions published every three years. General principles guiding the ICC code development process include:

1. Openness; anyone can participate in the code development process, without cost.
2. Transparency; every committee vote is documented and final decisions are made in open hearings.
3. Balance of Interest; Committee members are composed of representatives of the code community and special interest groups, and members cannot vote when there is a conflict of interest. ICC membership is not required of committee members.
4. Due Process; any attendee at a hearing may testify, and proponents of code changes may rebut opponents and vice versa. Committees must consider all code change proposals.
5. An Appeals Process; Actions of the code committee can be appealed by anyone.
6. Consensus; Code Committees vote to approve, modify, or defeat code change proposals, and change actions require a ⅔ majority vote. The ICC assembly can challenge committee actions.

2.3.4 *The International Building Code*.

The International Building Code (IBC) (ICC, 2010b) is a performance-based model building code. The scope of the IBC is broader than that of the IRC. IBC section 101.2

contains an exception for the design of housing: “Detached one- and two-family dwellings and single-family dwellings (townhouses) not more than three stories above grade plane in height with a separate means of egress and their accessory structures shall comply with the *International Residential Code*” (ICC, 2010b).

2.4 Inspections

Inspections are recognized as a means of quality control in many fields such as software code (Dunsmore, Roper, & Wood, 2003), highway bridges (Graybeal, Phares, Rolander, Moore & Washer, 2002), ship construction (SSC, 1990; ASTM, 2004), aircraft safety (Bobo, 1995), construction safety (OSHA, 2009), wood deck construction (Anderson, Woeste & Loferski, 2003), and existing commercial real estate inspections (ASTM, 2001). Inspections are also recognized as a means of quality control in residential construction (Abdul-Rahman, 1993; Atkinson, 1998; Kuprenas, 2008). Hansen (1988) writes, “The objective of a routine inspection is the early identification of problem areas”. Regarding residential inspections, Georgiou, Love, and Smith (1999) make an interesting point that in spite of the role of the inspection as a quality control method, “one cannot inspect quality into a product”. Construction errors - if any - are already built into the dwelling before the inspection is performed. However, the implicit assumption of code inspections is that inspections can in fact „inspect quality“ into the house by finding construction issues at an early stage so that corrections can be made. Further, inspections can improve quality if the penalties (cost and time delays, the inability to sell or occupy the house) for non-compliance are high enough. In that sense inspections may help deter non-compliance (Canty, Rothenstein & Avenhaus,

2001). Research conducted using historic data of building construction in California found that inspections positively improve project quality. "…Elements included in the total project cost (design, management, inspection, testing) have a positive impact on construction quality" (Kuprenas, 2008).

Inspection literature primarily focuses on existing structures and the in-service condition of wooden components to determine the existence and extent of wood deterioration (Clausen, Haughton & Murphy, 2003, Al-Chaar, Issa & Hayes, 2002; Falk & Moody, 1989; NAVFAC, 1985; Falk & Ross, 1990; Hansen, 1988; Ross, Brashaw & Wang, 2006; Freas, 1982). One inspection issue that has received relatively little research attention involves detecting prescriptively non-compliant installations of EWP in new construction. Inspection of new construction differs from that of existing structures in that new framing materials are not concealed by finish materials and have not yet been exposed to in-service conditions.

There are two main types of residential pre-drywall inspections:

1) Municipal code inspections (required by jurisdictions that have adopted building codes).

2) Third-party inspections (such as home inspections) commissioned at the discretion and expense of the purchaser.

Each of these inspections can play an important role in the detection of EWP non-compliant installations.

2.4.1 Inspection Guidelines.

ASTM E-2018 *Standard Guide for Property Condition Assessments: Baseline Property Condition Assessment Process* (ASTM, 2001) provides guidelines for a performance condition assessment (PCA) inspection for existing commercial real estate. However, the logic and approach to inspecting provides a workable basis for use in pre-drywall residential inspections. This standard addresses the limited nature of the inspection, defines the scope and activities of the inspection process, and defines the inspector as a „consultant" or „field observer", the inspection as a PCA, and the inspection report as a „property condition report" (PCR). It also refers to the person who commissions the inspection as the „user" and the inspection as a „survey". The term „survey" is not generally applied to residential inspections because it is already the accepted term for the process of determining and marking property boundaries on a plat. It is stated in ASTM E-2018 (2001) that "The quality of a PCR is highly dependent on the qualifications of the field observer and PCR reviewer. These qualifications include such factors as experience, education, training, certifications, and professional registration/licensure in architecture or engineering."

The process and limitations of the include identification, causes, and cures of the observed conditions are not a part of the inspection process (ASTM, 2001). These differences create a clear distinction between the functions of an inspector and engineering and architecture professionals.

ASTM F-1754 *Standard Guide for Marine Vessel Structural Inspection Considerations* (ASTM, 2004) and SSC-332 *Guide for Ship Structural Inspection* (SSC, 1990) prescribe the process for inspecting the structure of marine vessels. Although specific inspection

details differ between ships and housing, elements of the underlying inspection processes can be adapted to residential EWP inspection. These standards recognize that installation violations can be detected early in the construction process and minimize the need for more expensive repairs later. ASTM F-1754 (ASTM, 2004) and SSC-332 (SSC, 1990) emphasize the importance of creating an inspection plan based on agreed-upon standards and note that owners may feel the need for inspections beyond the required minimum required inspections. There is a trade-off in conducting these added inspections. Inspections add cost and possibly add delays to the construction process, but may discover structural deficiencies that might otherwise go undetected (Sawhney, Bashford, Palaniappan, Walsh & Thompson, 2005).

A part of the inspection plan for ASTM F 1754 (ASTM, 2004) is the „degree" of inspection, which specifies parameters regarding specific details to be observed. The inspection degree includes that the ship structure be in direct line-of-sight, close enough to visually identify cracks of two inches or more (five feet is the suggested inspection distance), use a continuous process to minimize time required, and be divided into discrete inspection zones. The plan should identify particular areas of the structural components requiring special attention during the inspection, and where specific inspection methods may be required. Construction materials should be inspected upon delivery for compliance with specified dimensions, type, and grade of material, and are free from visible defects. Observations should be made on the general workmanship of the structure, with emphasis on installation violations that might give rise to defects such as cracking of members.

2.4.2 Inspection Variability.

As with any inspection type, the visual inspection method was found to be subject to variations in reliability. Graybeal et al. (2002) conducted research to determine the reliability of the visual inspection method in the context of highway bridge inspections. There was a wide range of „thoroughness" of inspectors, as measured by the number of connections evaluated. Outside specialists watching the inspectors at work made this thoroughness evaluation. Two types of inspections were evaluated; the first type was for routine inspections, the second for in-depth inspections. Factors that influenced the results of the routine inspection included inspector fear of traffic, eyesight, and quality of color vision, formal training in bridge inspections, and perceived level of knowledge of structure maintenance and complexity. The inspector could improve his/her training in bridge inspections and knowledge of structure maintenance and complexity, but may have little control over eyesight and fear. The following are general conclusions based on the in-depth inspection results by Graybeal, et al. (2002):

1. The more time spent on the inspection, the more defects were found.
2. The best inspectors were more likely to use a flashlight during their inspections.
3. Inspectors who found more defects moved in closer to the items being inspected.
4. Better inspectors had better mental focus.
5. Better inspectors had less fear of heights (bridge inspections often involve using scaffolds and/or cranes to reach the bridge structures).
6. Better inspectors used multiple viewing angles to inspect components.

7. While most inspectors could identify generalized problems, better inspectors were more likely to identify localized problems.
8. Better inspectors expected to find problems.
9. A notable number of inspectors were not searching for the types of defects for which the inspection was performed.

Thus, regardless of how thorough and complete an inspection methodology may be, many variables such as environmental and human factors may influence the effectiveness of the inspection.

. 2.4.3 Factors Influencing an Inspection.

To illustrate the interaction of factors and provide an estimate to the complexity of inspections, the author developed a model to estimate values of human, technological, and environmental factors. This model is based on Washer, Moore, and Walther (1999) and presents the factors influencing the outcome of visual inspections. The model is shown in Table 2 – 1. While the model is necessarily subjective, actual situations could be presented by adding or subtracting factors as appropriate for a given set of circumstances. Assignment of „importance" and „percent of perfect" weightings will vary according to who is making the assessment, and will likely vary from inspector-to-inspector, from day-to-day, and from job-to-job. This framework provides a rough assessment of the effects of the various factors that influence the final quality of the inspection. Using the assumed values shown in the matrix below, this tool suggests that even under excellent environmental conditions and inspector readiness, attainment of a "perfect" inspection is unlikely to be achieved.

Table 2 - 1: Inspection performance factors.

Inspection Factors				
Human Factors	**Importance**	**Percent of Perfect**	**Totals**	**Perfect Score**
Vision	0.10	0.95	0.10	0.10
Motivation	0.25	0.95	0.24	0.25
Skill Level	0.45	0.95	0.43	0.45
Reward	0.20	1.00	0.20	0.20
Other	0.00	0.00	0.00	0.00
Total	**1.00**		**0.96**	1.0
Inspector Percent Perfect			**96**	100
Technology Factors	**Importance**	**Percent of Perfect**	**Totals**	**Perfect Score**
Equipment	0.50	0.97	0.49	0.50
Software/ References	0.45	0.99	0.45	0.45
Power Availability	0.05	1.00	0.05	0.05
Total			**0.98**	1.00
Technology Percent Perfect			**98**	100
Environment	**Importance**	**Percent of Perfect**	**Totals**	**Perfect Score**
Daylight	0.25	0.95	0.24	0.25
Visual Obstructions	0.07	1.00	0.07	0.07
Temperature and Humidity	0.20	0.90	0.18	0.20
Rain	0.20	1.00	0.20	0.20
Wind	0.05	1.00	0.05	0.05
Time Limitation	0.13	1.00	0.13	0.13
House Design Complexity	0.10	0.90	0.09	0.10
Other	0.00	0.00	0.00	0.00
Total	**1.00**		**0.96**	1.00
Environment Percent Perfect			**96**	100
Inspection Percent Perfect			**90.13**	100

Final result (90% in this case) is obtained by multiplying the subtotal category percentages.
Values for 'Importance' and 'Percent of Perfect' will vary. This example uses assumed values.
Method adapted from Washer, et al. (1999)

2.4.4 Visual Inspections.

Moore, Phares, Graybeal, Rolander, and Washer (2000) define visual inspection as "all unaided inspection/evaluation techniques that use the five senses with only very basic tools (for example, flashlights, sounding hammers, tape measures, plumb bobs, etc.)". A visual inspection can include other sensory inputs such as a sense of balance to help detect issues such as out-of-level floors and stairs. Ross et al. (2006) note that visual inspection is the simplest method and though some technology may be used in visual inspection, the only technology requirement is the need for strong light. Demaus (1995) comments that use of the human senses "remain the most valuable and widely used tools in the investigation of buildings…". Falk and Moody (1989) and Falk and Ross (1990) report on the inspection and engineering assessment of existing wood frame structures in North America, and confirm that the visual assessment method is essential.

2.4.5 Municipal Code Inspections.

Permits are needed for new construction, as well as when an existing structure is enlarged, modified, repaired, moved, demolished, and when a change in occupancy involved (ICC, 2010a). Permit applicants must submit forms, diagrams, plats, etc., as required. Once the proper documentation has been submitted, the BCO adheres to a processing protocol to approve or reject the application. The construction permit holder – usually the general contractor (GC) or the property owner - is responsible for code compliance rather than the building code officials (BCOs) (ICC, 2010a).

Inspections are conducted under the directions of the authority having jurisdiction (AHJ). The AHJ is the appropriate governmental agency through which codes are

developed and adopted. The AHJ is a legally empowered entity, whose title and composition may differ among various jurisdictions. In municipalities with legally adopted building codes, the chief building code official (BCO) is appointed through the appropriate governmental authority such as the Mayor, Town Council, or other administrative authority. The chief BCO may appoint deputies. Section R 104.1 of the IRC specifies the powers and authority of the BCO. The BCO is "Authorized and directed to enforce the provisions of this code. The building official shall have the authority to render interpretations of this code and to adopt policies and procedures in order to clarify the application of its provisions" (ICC, 2010a). Deputy employees such as inspectors and plan examiners (these professionals are included under the rubric of BCOs in this text) shall have powers as delegated by the chief BCO.

Section R104.10 of the IRC makes provision for the BCO"s judgment in determining the compliance of any modifications to code provisions that may have been made. On an individual case basis, the BCO may determine whether the modification is "in compliance with the intent and purpose of this code and that such modification does not lessen health, life and fire safety requirements or structural" [*sic*] (ICC, 2010a). Approvals by the BCO for such special case modifications of code provisions must be kept on file in the department of building safety (ICC, 2010a; Chesterfield County Department of Building Inspection, 2009). Code inspection results are reported directly to the builder so that corrections can be made.

The permit is not to be construed as an approval of any code violation not written up and reported by the BCO (ICC, 2010a). BCOs can require that code violations be brought into compliance even when such violations are discovered after construction is

completed and final permits have been issued. In the event that mistakes are made during code inspections, municipal inspectors are protected from personal liability (ICC, 2010a). A flowchart of the code inspection process as approved by the SMEs is shown in Figure 2 - 7. Once a request for code approval is made, an inspection is performed. If no violations are reported, approvals are issued. If violations are reported, the builder is notified of the deficiencies for correction. Another inspection is required after the deficiencies have been corrected.

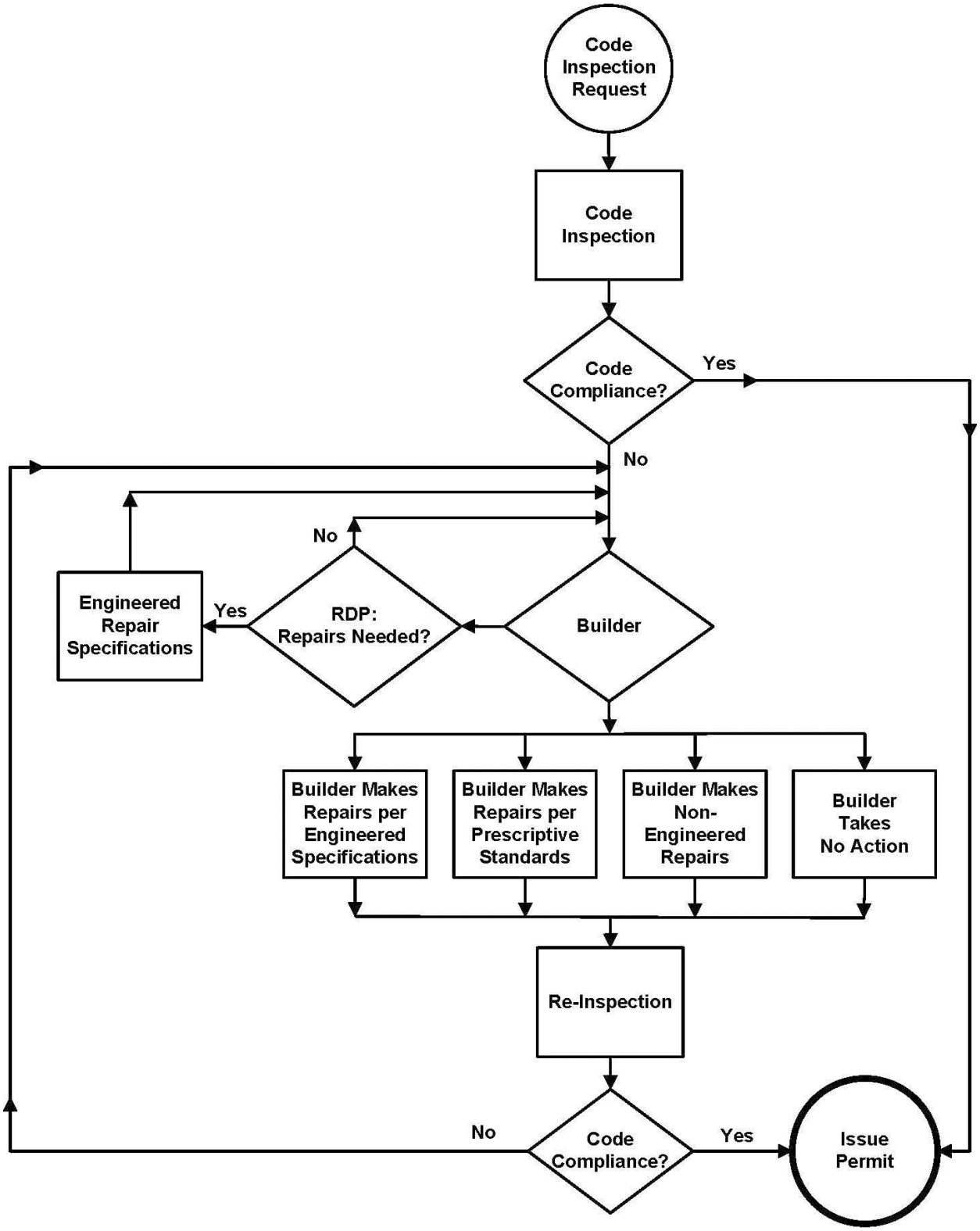

Figure 2 – 8: The code inspection process.

2.4.6 Home Inspections.

Fee-paid private inspections are not required by building codes and are conducted at the discretion of property purchasers as a part of their due-diligence regimen to aid in detecting issues of particular importance, and to help detect non-compliance issues not previously undetected. Some lenders and housing assistance programs may require home inspections as an eligibility requirement for borrowers. Private inspectors who are members of the American Society of Home Inspectors (ASHI) owe the client a duty of confidentiality, which limits the inspector from sharing the inspection findings with parties other than the client, unless specifically authorized to do so (ASHI, 2006). No public records are kept of these inspections, so the impact of private inspections on detection of non-compliant installations is unknown.

Home inspections are conducted in a similar fashion as code inspections. The home inspector works directly for, and reports to the client, who is typically the purchaser of the new property. Home inspectors negotiate a written contract with each client that outlines the scope and limitations of the inspection, inspector liability, fees, and payment terms. Home inspections are normally conducted according to a set of professional standards of practice (SOP) and code of ethics (COE) such as those established by the American Society of Home Inspectors (ASHI, 2006). The SOPs specify items to be inspected, but do not specify inspection methods (except in a few cases). They provide a minimum standard for items that ASHI members agree to inspect, and the SOPs serve as a means of managing client expectations. SOPs also serve as the basis by which disputes arising from an inspection may be settled.

Home inspector credential requirements vary by jurisdiction. Many states have no regulatory requirements for home inspectors at all, but a growing number of states require licensure or certification. Many home inspectors choose to earn additional professional designations offered by trade associations such as the American Society of Home Inspectors (ASHI), which offers the ASHI certified inspector (ACI) designation. Many writers have commented on the inspection of existing homes (Cauldwell, 2001; Becker, 2002; Spada, 2008; Carson Dunlop & Associates, 2008), but little on the information is available related to pre-drywall inspections of newly constructed homes. Home inspection reference materials tend to focus on checklists for inspecting, rather than on methods used to conduct the inspection.

Non-compliant issues discovered during home inspections but not previously identified add variability to the builder"s cost and time schedule, and represent additional problems for the builder. Third party inspectors have no authority to determine code compliance or to compel builders to make repairs. A representation of the potential areas of additional time and expense that may be incurred by the builder is shown in Figure 2 – 8. The process depicted in Figure 2 – 8 was proposed by the researcher, and approved by the SMEs. The flowchart focuses on the purchaser of the new home as the primary beneficiary of the report findings, and on the builder who must respond to the inspection findings.

The inspection report containing and observed deficiencies is delivered to the client who may choose to accept the property as is, in which case the process terminates at that point. However, many purchasers want identified problem areas to be repaired. In these cases, the purchaser delivers a list of deficiencies to the builder, who can respond

in different ways. For problems that involve EWPs, an RDP must be consulted, and repairs must be made according to the RDPs designed specifications. If the code inspection has already been conducted and the house approved, it may be necessary for a follow up code inspection to approve the corrected defects. If the buyer and the builder fail to come to terms on the proper disposition of the identified defects, legal counsel may become involved. This complicated process contrasts with the relatively easier process of the code inspection where the purchaser is not involved.

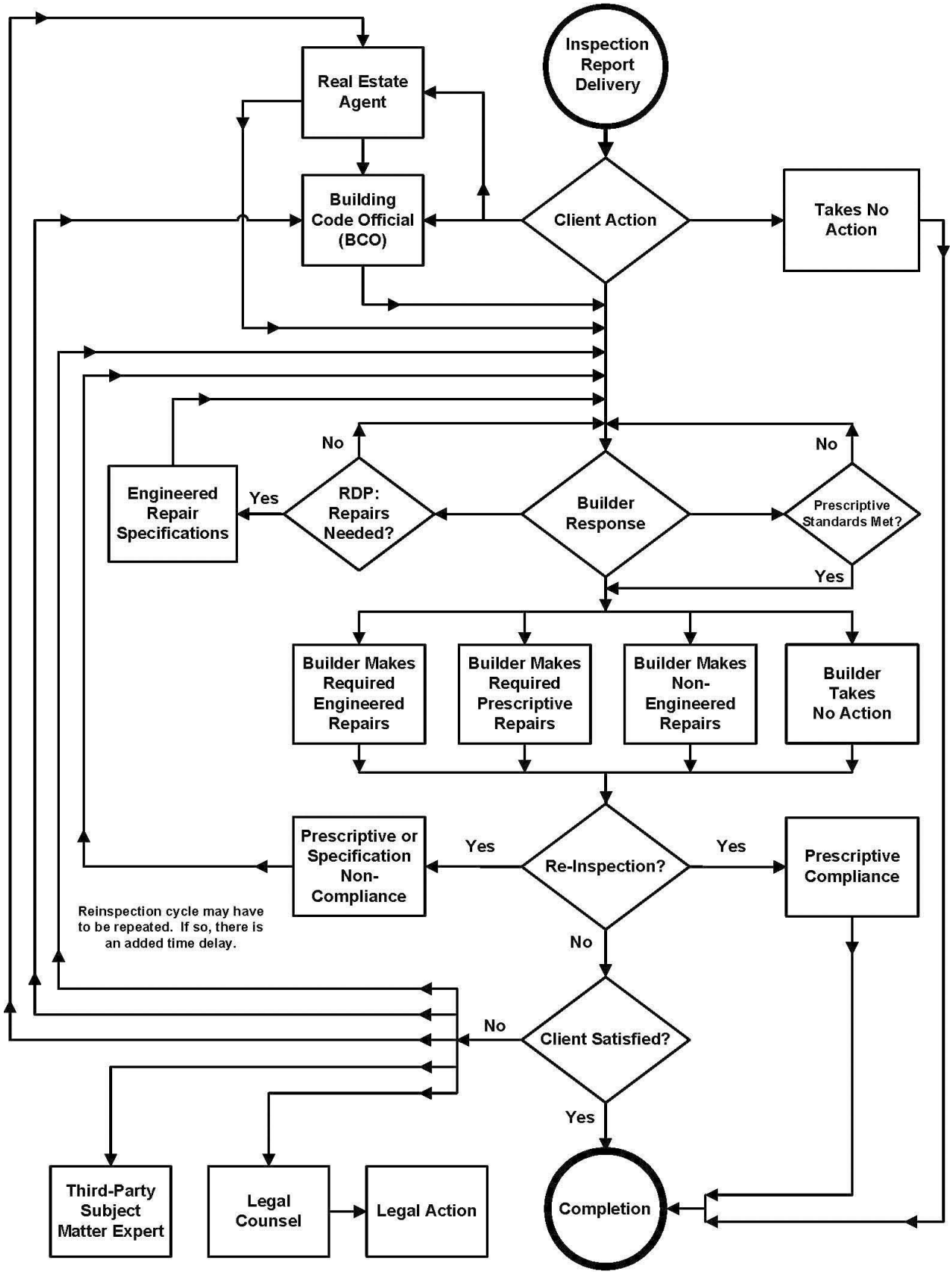

Figure 2 – 9: Process after delivery of the home inspection report.

2.4.7 Non-Destructive Evaluation.

A large body of research has been conducted on non-destructive evaluation (NDE) methods (Ross et al., 2006; Horvat & Fazio, 2003; Demaus, 1995). Although many of these techniques depend on remote sensing equipment that can determine the presence of latent defects by technologies such as ultrasonic and X-ray testing - („technological NDEs"), the primary NDE method is the visual inspection. Technological NDEs do not appear to be specifically designed or deployed to detect installation errors in new construction.

2.4.8 Performance Condition Assessment Inspections.

Performance Condition Assessment (PCA) inspections usually involve non-destructive technological methods in addition to visual methods for determining the extent of wood decay or damage that may exist in wooden members in service, and may be accompanied by an assessment of residual material structural capacities. Assessment of the performance or the remaining structural characteristic of the structure and its components is what sets PCAs apart from home inspections and code inspections. In this context, Ross, Brashaw, Wang, White, and Pellerin (2004) write that while visual inspection is a part of a condition assessment for wood deterioration in existing structures, it should never be used alone; the reason being that visual methods may not be able to detect wood deterioration in early stages. This limitation does not affect the pre-drywall inspection of new construction (the framed house with all roughed-in utilities, but before the installation of insulation, floor, and wall coverings), because the wood components are new and have not yet been exposed to in-service conditions.

The wood components in new construction are less likely to contain deterioration from fungi and insects than wood from in-service structures.

Ross, Brashaw, and Wang (2006) cite the procedures for a PCA and the reasons for performing this assessment. A PCA consists of the following:

1) Systematic collection and analysis of data pertaining to the physical and mechanical properties of materials in use,

2) Evaluation of the data collected,

3) Providing recommendations based on evaluation of the collected data, regarding portions of an existing structure that affect its current or proposed use.

Freas (1982) lists situations where PCAs are needed:

a) Partial or complete collapse of the structure
b) Development of a state of unserviceability of the structure due to excessive deflection, vibration, and cracking
c) Changes in the use of the structure
d) Changes in the applicable building code, particularly with respect to prescribed loads
e) Fire damage
f) Reduction in the strength of wood structural members due to damage, modifications, partial failure, deformation, decay, insect attack or settlement of the structure

PCA methods involve quantitative analysis in determining load and resistance, and assign qualitative evaluations that attempt to determine a „degree of goodness"

classification for wood components affected by reduction in strength from the above mentioned causes. Horvat and Fazio (2003) note that PCA inspections may involve the use of prescriptive solutions where there are no other means of verifying performance compliance.

2.5 The Residential Construction Industry

The U.S. Bureau of Labor *Statistics Career Guide to Industries, 2010-11 Edition* (BLS, 2010) describes the nature of the construction industry:

> Construction usually is done or coordinated by general contractors, who specialize in one type of construction such as residential or commercial building. They take full responsibility for the complete job, except for specified portions of the work that may be omitted from the general contract. Although general contractors may do a portion of the work with their own crews, they often subcontract most of the work to heavy construction or specialty trade contractors.
>
> Specialty trade contractors usually do the work of only one trade, such as painting, carpentry, or electrical work, or of two or more closely related trades, such as plumbing and heating. Beyond fitting their work to that of the other trades, specialty trade contractors have no responsibility for the structure as a whole. They obtain orders for their work from general contractors, architects, or property owners.

Subcontracted work comprises much of the work examined by residential inspectors. In production homebuilding, it is estimated that between 90 to 100 activities are performed by 30 to 40 trade contractors in virtually all new residential construction (Sawhney, et al., 2005). This results in a large number of transitions („hand-overs") between separate contractors and each transition presents opportunities for error to occur. Sawhney, Walsh, Bashford, and Palaniappan (2009) describe the transitions as opportunities for construction errors to occur:

> The high number of control transfers in production home building can be attributed to two factors: 1) home builders allocate more resources toward sales and development activities and fewer to managing the activities of trade contractors; and 2) trade contractors focus on one activity, build expertise in that activity through specialized tools and techniques, and become efficient in completing that activity (sometimes paying limited attention to the downstream control transfer).

Subcontractors tend to work on multiple jobs at the same time and allocate their resources according to the separate job sites with the best construction process stability. This can result in fewer workers being on site at any given construction project if violations occur, thus increasing the time delay in effecting repairs (Sawhney et al., 2005). Sacks and Harel (2006) found that there is an "adversarial nature of the …General Contractor (GC) to subcontractor… relationship…showing that lack of faith between project managers and subcontractors is an expected result of the conditions created by traditional unit price or lump sum contractual agreements…". Kim and Paulson (2003) and Sacks and Harel (2006) reported that in projects under tight control

by the GC, the primary goal is to complete projects on time. General contractors control the construction schedule by pushing subcontractors "to perform even when conditions do not allow the work to be done efficiently or at the required level of quality" (Kim & Paulson, 2003; Sacks & Harel, 2006). This can result in cost overruns for the subcontractors.

A construction superintendent or a project manager often represents the GC on the jobsite. Haynes and Love (2003) conducted research into the work-related stresses on construction project managers and conclude, "Construction project managers work under conditions of uncertainty and high risk, and this can contribute to an excessive level of work-related stress being experienced." If not properly addressed, this stress can lead to cost and time overruns.

Sawhney et al. (2009) reported that construction processes are subject to different methods of conceptualization, which affect the analysis methods applied to these processes: "Project planning" views the construction process as a series of activities that can be individually improved, and "production planning" considers the separate work processes and the connections (buffers) between them. The latter method sets the framework for development of lean construction, which encourages low variability in labor and process flows. The buffering paradigm nicely incorporates the code inspection process in residential construction.

2.5.1 Residential Construction Environment.

New construction is a complex process involving many professions, requirements, and variables. Wood frame buildings are usually built over an extended period in exposed

weather conditions by multiple subcontractors whose involvement is limited to individual trades (plumbing, electrical, framing, etc.) (BLS, 2010; Thomas, Riley, & Sanvido, 1999; Sawhney et al., 2005; Hancher & Abd-Elkhalek, 1998). There are occasions when the work of one trade affects the work of another, such as when plumbing pipes are installed through structural framing components.

Homes at the pre-drywall stage of construction have completed framing, exterior sheathing, roof cover, and roughed-in utilities. Insulation and wallboard are not present, and windows, doors, and exterior siding may or may not be installed at this time. There is generally no functioning plumbing, electricity, or heating and air conditioning available at this stage, and sanitary plumbing facilities for workers are often rudimentary. Conditions of darkness, extreme heat or cold, high winds, precipitation, and high humidity can have an effect on workers in a broad range of construction activities (Thomas et al., 1999; Hancher & Abd-Elkhalek, 1998). Thomas, Riley, and Sanvido (1999) found a relationship between worker productivity and two particular environmental conditions - cold and snow. Cold and snow conditions accounted for a decline in labor productivity by 32% and 41%, respectively.

2.5.2 Platform Framed Wood Structures.

Framed homes are built in accordance with the appropriate building codes and the approved building plans. The construction process is often a straightforward process where the footers are poured, the foundation is laid, the sill plates are anchored to the foundation and, in the case of a raised foundation, the first platform (or deck) is built and secured to the anchored sill plate. Wood platforms are composed of uniformly spaced

joists attached to a ledger or rim joist. The framed walls consisting of uniformly spaced studs are raised, leveled, plumbed, and secured to the intersecting wall panels to create an interlocking exterior perimeter. Interior bearing beams, walls, and partition walls are constructed and installed at this time. For multi-story houses, the same procedure for floor systems and wall structure is repeated. The roof structure is then installed.

Openings for doorways and windows in bearing walls have headers above them to support and divert the load from higher levels or the roof structure. Bearing walls with studs located at prescribed intervals are considered to have a uniformly load distribution on them. By diverting the otherwise uniform vertical load around the openings, headers carry the load to supporting columns or jack studs. The diverted load creates point loads beneath each supporting jackstud or column, which requires a continuous load path through the framed structure to the foundation. Many times, the vertical load paths are directly aligned with each other creating a continuous load path. In other cases, the load path may have to travel through an unintended path to the foundation. Similarly, loads are diverted through floor systems at openings such as those required for stairways, and must travel through a designed load path to the foundation. Inspectors can often observe discontinuities in these load paths, but may not know if one was designed for a given situation.

Installers must pay special attention to the transfer of concentrated loads directly to the foundation or to other beam, column, or bearing structures (ICC, 2010a). Blocking is a typical method to accomplish this, and refers to several different types of support members that provide continuity of load paths through interstitial spaces in the case of load paths, and provide support for connector hardware and I-joists in certain

circumstances. Common blocking problems include blocking installed in incorrect locations or not installed at all. The lack of proper load paths can result in performance problems such as sagging floors, inability to properly transmit vertical and lateral loads, or significant compromise of the entire structure.

2.5.3 Construction Error.

Construction „defects" is a broad category that includes structural components and workmanship (Henderson, 2006). Construction errors are not unique to the United States or to residential construction. According to Abdul-Rahman (1993), costs due to quality failures are defined as "all costs incurred by the business because the project was not designed, produced, or serviced in a perfect manner during the initial cycle", and quality is defined as "conformance to requirements". Abdul-Rahman (1993) cites research into construction errors involving civil engineering projects in the U.K. and found that 50% originated from poor design and 40% from poor construction. Atkinson (1998) observed, "Defects and their mode of correction, together with the basic sciences involved, are repeated continually and often involve traditional technology as well as newer designs. This supports the view that errors of application rather than technical factors are to blame for most defects". Atkinson (1998) commented that efforts to minimize errors tend to concentrate on technological solutions, where a better line of inquiry would be to concentrate on why known technology (such as EWPs) is not being applied properly.

Prior research has documented the negative impact on building performance arising from undetected construction errors (Lebeda, Gupta, Rosowsky & Dolan, 2005; Girhammar & Kallsner, 2008). These studies concentrate on the effects of installation

errors, rather than on preventive detection. Schierle (1996) demonstrated the use of visual inspections for detecting specific seismic and high-wind framing construction errors in pre-drywall inspections of wooden buildings. Student research assistants conducted inspections of actual construction sites, and input of architects and engineers was obtained from a mail survey. The results indicated that depending on the type of dwelling units inspected, between 4% and 58% had missing or flawed seismic and high wind structural errors.

An extensive analysis of housing insurance claims for residential construction defects in Australia found that the cost to rectify these errors was 4% of the construction contract value (Mills, Love, & Williams, 2009). Evaluation of causes of defects in Australian residential construction show that house framing is one of the key systems that makes economic sense to concentrate preventive efforts on during the initial construction stage (Ilozor, Okoroh, Egbu, & Archicentre, 2003).

„Rework" is the term applied to activities necessary to bring work into compliance, which is usually done because of inspection failures. Love (2002) posits that rework costs tend to be consistent across types of construction projects. Although Love"s research was conducted in Australia, Love states that the results should be applicable in other geographic areas as well. Direct financial costs of rework may not only include the cost of the rework activities themselves, but also the costs of delaying completion of the project. Bashford, Sawhney, Walsh, and Thompson (2005) analyzed municipal inspection records from Chandler, AZ to determine how much time is lost due to rework as a result of inspection failures in residential projects. Bashford, et al. (2005) found

that “on average, 12 days are required to pass these critical path inspections, thus adding eight days to the construction cycle time”.

Atkinson (1998) noted the importance of applying updated rules on similar tasks that have worked before: “For often repeated actions, there is a tendency for the individual to apply rules that have worked in the past. Errors might occur in such situations as where too much information is being received and a wrong rule is applied in panic” (Atkinson, 1998). Reason (1990) recognizes that “Errors are the inevitable and usually acceptable price human beings have to pay for their remarkable ability to cope with very difficult informational tasks quickly and…effectively”. Atkinson‟s error hierarchy model recognizes that errors in construction may result from the individual, from managerial ineptitude, and from broader factors such as economic, environmental, and time pressure. Chadwick (1986) states that “Concurrent design and construction frequently cause expensive and embarrassing rework with adverse impact on quality, particularly if these two functions are being carried out by separate organizations”. Atkinson (1998) notes that poor drawings and specifications as a „communication‟ type error that may play a role in construction defects.

Building construction errors can entangle builders in lawsuits. Insurance companies that provide liability coverage to builders have noted an increase in insurance premiums and claims against builders due to construction defects (Neumeister, 2006). Smith (2007) cites a trend in construction litigation where individual construction defect allegations are elevated to class action lawsuits, potentially increasing the costs to builders and insurers associated with settlement of the claims. In summary,

construction errors can be costly to repair, however, these costs may be reduced through proper inspection regimens.

2.6 Impact of Code Inspection Failure on the Construction Process

After the pre-drywall framing and utility rough-in inspections, a code inspection is required before the following stages of construction can proceed. Inspection rejections introduce a potentially large variability in the continuity and predictability of the overall construction process. When work performed fails to pass inspections, workflow variability, costs, and unexpected time delays increase. However, conducting quality control inspections at pre-determined stages in construction reduces cost for error correction than if the mistakes are discovered after succeeding construction stages are completed.

Sawhney et al. (2005) analyzed residential permit inspection data for two jurisdictions in Arizona to determine time delays in construction projects related to code inspection failures. Data on rough frame inspections performed on 1,574 new homes disclosed that the probability of passing the first code inspection was 16%; the probability of passing the second inspection was 44%. Based on the remaining 1,322 homes, the probability of passing the third inspection was 55%, and the probability of passing the fourth or subsequent inspections was 61%. Many homes required more than four inspections before they passed. There were concomitant time delays in project completion based on the number of code inspection failures. The costs to the builder were caused by the additional time to complete a home for delivery. These delays can

have financial implications for the builder based on the unique circumstances of each situation.

Sawhney et al. (2005) presents a flowchart of the rough framing inspection process (Figure 2 - 9), which concentrates on construction delays resulting from failure of rough framing code inspections. The rough framing inspection begins after the pre-slab/interior bearing inspection. The builder must arrange for trade contractors to complete the framing, and the time involved depends on the contractors‟ availability. The contractors then build the framing. The builder then obtains building permits from the municipal building office, introducing another potential time delay in getting the code inspector to perform the framing inspection. The code inspector will either approve the framing, or not approve it. If the framing does not meet the inspector‟s approval, the builder goes through the same process of locating the subcontractors, arranging for the repair work to be done, and scheduling another inspection with the municipal building department.

Sawhney, et al. (2005) found that the pass rate for construction inspections (along with resource availability) is influenced by management practices, which in turn affect the variability of workflow. Development of structured processes to maximize the inspection pass rate can enhance the quality of output.

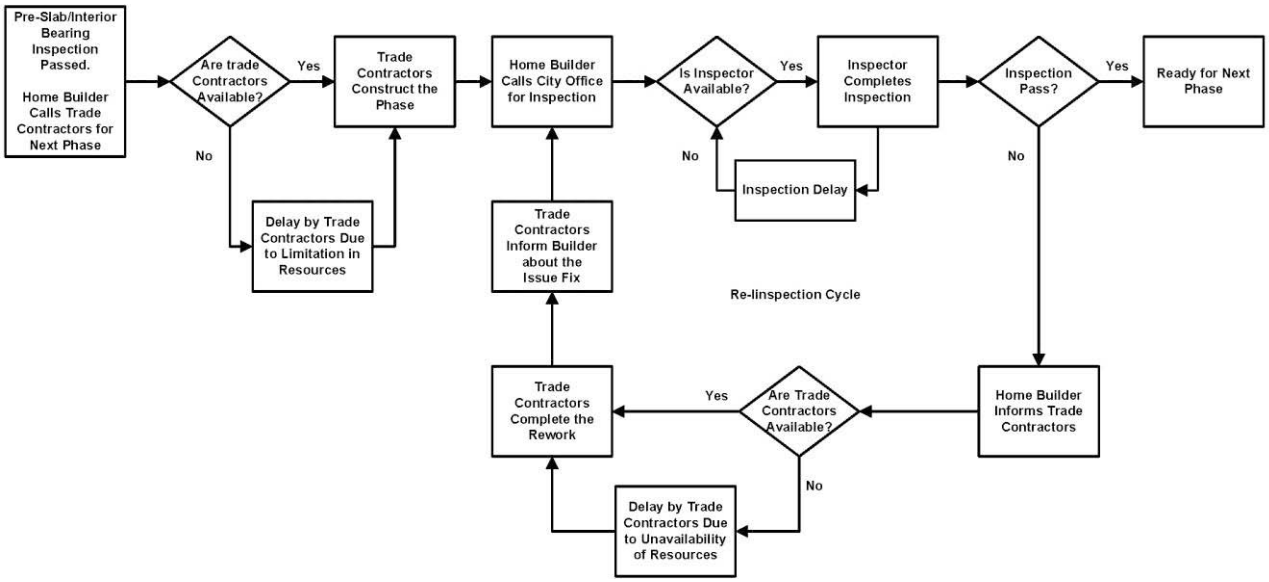

Figure 2 – 10: Phase inspection process (Sawhney et al., 2005). Used under fair use guidelines, 2011.

2.7 Qualitative Research Methods

Due to the subjective nature of the opinions and methods used by subject matter experts (SMEs), a certain amount of subjectivity is inevitable in gathering and organizing data relevant to housing inspections. This type of information is qualitative, and there are no universally accepted methods and techniques for qualitative analysis (Kent, 2001). Qualitative research requires selecting appropriate methods and an appropriate validation strategy. Kent (2001) notes that qualitative data can be “a source of well-founded, rich descriptions and explanations of processes in identifiable local contexts” and “may result in unanticipated findings and may help researchers go beyond their initial ideas and to generate or revise conceptual frameworks”. Open-ended comments can be used to review, summarize, and elaborate on the range of

viewpoints. These comments may be paraphrased and placed in general categories (Kent, 2001).

2.7.1 The Delphi Method.

The Delphi method is a qualitative research technique developed by Norman Dalkey of the RAND Corporation to help US military defense strategies during the Cold War (Skulmoski, Hartman, & Krahn, 2007). Skulmoski et al. (2007) described the use of the Delphi method as a useful research tool, and defined the Delphi method as:

> …an iterative process used to collect and distill the judgments of experts using a series of questionnaires interspersed with feedback. The questionnaires are designed to focus on problems, opportunities, solutions, or forecasts. Each subsequent questionnaire is developed based on the results of the previous questionnaire. The process stops when the research question is answered: for example, when consensus is reached, theoretical saturation is achieved, or when sufficient information has been exchanged.

As originally developed, the Delphi method consisted of four elements, which Skulmoski et al. (2007) referred to as the classical Delphi method. The classic Delphi elements include:

1. Anonymity of the participants

   Anonymity allows participants to feel free to offer opinions without social pressure influencing them. The responses can be evaluated on merit alone.

2. Iterative process

   The process of developing and refining responses includes multiple rounds of questioning, and allows the experts to refine their thinking.

3. Controlled feedback

   The iterative process allows each expert to see all responses from the expert panel, and to offer suggestions based on the group"s efforts. This feedback encourages refinement of the responses between rounds.

4. Statistical aggregation of group response.

   Various methods exist for quantifying results of qualitative research. Numerical summaries may then be developed.

One advantage of the Delphi method is adaptability. There is no standardized Delphi technique. The Delphi elements have been modified in different research projects to suit the needs of the project. Modifications may include the number of expert consultation rounds, the use of qualitative or quantitative analysis methods, and the number of subject matter experts (Skulmoski, et al., 2007).

Success in using the Delphi method depends on many variables, including the nature of the data needed (qualitative or quantitative), relevant groups from which the experts are to be drawn, composition of the panel of experts (heterogeneous or homogenous), selection of the number of expert panel members, the number of rounds, the modes of interaction, and the criteria for consensus or validation (Skulmoski, 2007).

The Delphi method has been widely applied in the healthcare field (Broder, 2008; Skulmoski, et al., 2007), and found acceptance in other fields such as information science, and business management (Skulmoski, et al., 2007), and investigating traits of successful software developers (Wynekoop & Walz, 2000). Rajendran and Gambatese, (2009) and Yeung, Chan, and Chan (2009) have applied modified versions of the Delphi method to problems in the construction industry. The Delphi method provides not only an accepted method for gathering and refining knowledge, but serves as a validation process as well.

2.7.1.1 Delphi Procedures.

Skulmoski, et al. (2007) described the Delphi process as the following series of steps.

1. Develop the research question. What is the nature of the information sought? The Delphi method is very good for obtaining knowledge and opinions from defined experts.

2. Design the research. How will the Delphi method be used for the project – the classic approach, or a modified approach?

3. Research sample. The researcher must determine whom the experts are, on what basis they are selected, and how many are needed for the project. Note that the use of the word „sample" does not necessarily imply a statistical or randomized sample. Samples of convenience or for a special purpose are often involved.

4. Develop the round one questionnaire. Survey questions must derive from the research question and contribute to the solution. The researcher must determine

the type of questions to be included and the use of open-ended, or more structured questions.

5. Pilot study. The researcher may determine that preliminary studies are necessary to adjust the scope of the research and to gauge the time for the respondents to complete the surveys. This step is optional.

6. Distribute round one questionnaire.

7. Analyze results from round one. The information from round one is organized and serves as the basis for development of the round two questionnaire.

8. Develop round two questionnaires.

9. Distribute round two questionnaires.

10. Analyze results from round two.

11. Repeat steps 8, 9, and 10 if needed for additional rounds.

12. Document, verify, and to the degree possible, generalize research results. The results must be preserved in a suitable format, and verification generally occurs through the iterative process of expert feedback. The researcher must be careful in determining the generalizability of the results, taking onto account the limitations of the study.

2.8 Selection of Experts

Selection of subject matter experts is based on the purposive sample technique, where participants are chosen with a specific purpose in mind. (Trochim, 2006). Patton (2002) also embraces the concept of „purposeful sampling" as a design strategy in qualitative research. Patton states:

> Cases for study (e.g., people, organizations, communities, cultures, events, critical incidences) are selected because they are „information rich" and illuminative, that is, they offer useful manifestations of the phenomena of interest; sampling, then, is aimed at insight about the phenomenon, not empirical generalization from a sample to a population.

Skulmoski, et al. (2007) suggested four requirements for an individual to be defined as an expert:

1. Knowledge and experience with the subject matter
2. Ability and willingness to participate
3. Ability to devote sufficient time to the process
4. Possess effective communication skills

The process of selecting a „correct" number of subject matter experts (SMEs) for qualitative research is subjective, with relatively little guidance in the literature. Consider the number of experts selected for studies from the following research fields: veterinary medicine - 33 experts (USDA APHIS, 2009), assessing student writing - one expert (Cho, Schunn, & Charney, 2006), validating a scale for eating disorders - five

experts (Sepulveda, Kyriacou, & Treasure, 2009), content validity of an integrative medicine attitude questionnaire - eight experts (Chung, Wong, & Griffiths, 2007), and development of a cancer patient questionnaire - 11 experts (Baró, Carulla, Cassinello, Colomer, Mata, Gascón, Gasquet, Herdman, Rodríguez, Sánchez, & Valentín, 2008). Skulmoski, et al. (2007) found that the number of expert participants in different Delphi studies ranged from four to 171. Each of the above studies incorporated SME inputs as a part of the validation process. Individual experts were chosen by categories of experience and qualification in the field, but no criteria was specified as to how many experts were chosen. To some extent, the number of experts will depend on how many are available, willing, and able to participate.

2.9 Validation Concepts

Patton (2002) states that qualitative research may be problematic for doctoral committees:

> Design flexibility stems from the open-ended nature of naturalistic inquiry as well as pragmatic considerations. Being open and pragmatic requires a high tolerance for ambiguity and uncertainty as well as trust in the ultimate value of what inductive analysis will yield. Such tolerance, openness, and trust create special problems for dissertation committees and funders of evaluation or research. How will they know what will result from the inquiry if the design is only partially specified? The answer is: they will not know with any certainty. All they

can do is look at the results of similar qualitative inquiries, inspect the reasonableness of the overall strategies in the proposed design, and consider the capacity of the researcher to fruitfully undertake the proposed study.

„Validation" is a term that is difficult to articulate as a single concept. Validation can best be described as an adopted set of rules that purport to „guarantee" a plausibly accurate representation of physical or sociological phenomena under study. When these rules are followed, using the assumptions of each type of methodology, the inquiry is said to be valid (Ratcliffe, 1983). To some degree, validation is based on who is making the judgment of validity, and upon the worldview (paradigm) of the researcher (Creswell & Miller, 2000). Research methods are always subject to „threats" to their validity. Threats are ways in which the researcher can be wrong, or that alternative hypotheses might better explain the phenomena (Maxwell, 2005). Anticipating threats and incorporating controls in the research design to minimize the risk of threats to the validity of the outcome is an inherent aspect of quantitative research.

Qualitative research differs in that establishing controls for all anticipated variables involved is not feasible. The concept of validation of qualitative research ranges from the „trustworthiness" of the researcher, to a detailed record of how the research was conducted, to the strict adherence to rules – or methods – that other parties believe to be true. In the end, the selection of all research methods is a philosophical decision.

An accepted method for qualitative research is to obtain validation systematically by soliciting feedback from respondents as the research progresses. This uses the respondents as the persons evaluating the research, which is important to this project,

because the respondents are the experts and the arbiters of validity. The researcher develops and conducts the research based on his/her broad assumptions and beliefs about science, research, the world, and the subject matter of the research, among other aspects of life. This may be thought of as researcher bias, and is generally countered by the researcher providing a statement of his opinions and possible biases and how they might affect research procedures and outcomes (Maxwell, 2005). Maxwell notes:

> Qualitative research is not primarily concerned with eliminating *variance* between researchers in the values and expectations they bring to the study, but with understanding how a particular researcher's values and expectations influence the conduct and conclusions of the study (which may be either positive or negative) and avoiding the negative consequences.

Maxwell (2005) cautions that "validity of your results is not guaranteed by following some prescribed procedure". Validation is intimately entwined with the perceived character and integrity of the researcher.

Similarly, Patton (2002) describes qualitative research „credibility" as possessing three „inquiry elements":

1) Use of rigorous methods (such as the interview method)

2) Credibility of the researcher ("dependent on training, experience, track record, and presentation of self")

3) The researcher's "philosophical belief in the value of qualitative inquiry"

Schwandt (1997) defines validity as “how accurately the account represents participants‟ realities of the social phenomena and is credible to them”. Carson (1989) and Law and Kelton (1982) take a similar view in that validity is based on the perception of subject matter experts as having „high face validity‟.

2.9.1 Validation Strategies.

Validity, in the context of qualitative data, should be considered indicative rather than absolute. Subject matter experts are selected based on their unique mastery of the type of information being gathered and evaluated. SMEs provide not only the information for development of the inspection methodology, but approval of how the data are processed. At each step in the process, the SMEs are asked to check information for accuracy, and approve how the data has been collected and organized to ensure that the methodology and development process accomplish the project goals. This is referred to as having „high face validity‟. High face validity derives from the opinions of subject matter experts (SME) who are not experts in testing methodologies, but can give an expert opinion that the construct, data, and conclusions look like they accomplish what they were designed to do (Maxwell, 2005).

Maxwell (2005) and Creswell and Miller (2000) refer to the researcher‟s paradigm as a relevant determinant of the choice of research methods, and propose a method-choosing decision matrix that accounts for differences in paradigm, and incorporates the concept of the „lens‟- or researcher‟s validation scheme (Table 2 – 2).

Table 2 - 2: Matrix for choosing qualitative validation procedures. (Creswell & Miller, 2000). Used under fair use guidelines, 2011.

Paradigm Assumptions / Lens	Postpositivist or Systematic Paradigm	Constructivist Paradigm	Critical Paradigm
Lens of the Researcher	Triangulation	Disconfirming Evidence	Researcher Reflexivity
Lens of the Study Participants	Member Checking	Prolonged Engagement in the Field	Collaboration
Lens of People External to the Study (Reviewers, Readers)	The Audit Trail	Thick, Rich Description	Peer Debriefing

2.9.2 Paradigms.

A paradigm is a philosophical or theoretical framework (Merriam Webster"s Online Dictionary, 2011). Patton (2002) asserted the postpositivist approach recognizes that judgment is inevitable in science, and that knowledge is "relative rather than absolute". Lincoln and Guba (1985) described the postpositivist paradigm as being characterized by the following elements:

1) Facts must be reconstructed through interpretation

2) Theories are the way facts are seen
3) Law-like internal relationships

Creswell and Miller (2000) noted that the constructivist paradigm accepts interpretive and open-ended perspectives on reality, and that validity is based on concepts such as dependability, trustworthiness, and authenticity. Further, Creswell and Miller (2000) describe the critical paradigm as one that is essentially confrontational. The critical paradigm challenges the assumptions of narrative reports, and requires that a researcher disclose his perspectives and potential biases as to how they may affect the research. A brief discussion of terms used in the selected validation procedures from the Creswell and Miller (2000) matrix follow.

2.9.3 Lenses.

The „lens" represents "the viewpoint for establishing validity", which means the person or group whose evaluation is critical to the acceptance of the research. Viewpoints include that of the researcher, the participants, and of people not involved in the study. It should be noted that in using qualitative research, the methods are not always linear, and may be subject to change as the project develops (Maxwell, 2005).

2.9.4 Member Checking.

Member checking consists of systematically presenting the data and conclusions and soliciting feedback from the expert participants to determine the credibility of the information. Thus, the validity procedure is based on participant opinion, rather than on an outside party. Lincoln and Guba (1985) have described this procedure as "the most

crucial technique for establishing credibility" in a study. Participant feedback (and the interview responses themselves) should be considered evidence regarding validity, rather than some absolute measure (Maxwell, 2005).

2.9.5 Audit Trail.

An audit trail allows people not involved in obtaining or processing the information for the project to form opinions of the credibility of the research by providing them with detailed information about the research process. Reviewers can examine the records, procedures, and decisions that went into the methodology development process and outputs. Therefore, details of the research activities and data handling were recorded as they actually occurred.

2.9.6 Interview Survey Method.

The interview survey method consists of personal interviews based on a series of pre-determined open-ended questions. Additional telephone and email interviews are a part of the ongoing feedback requirement. Patton (1980) describes this approach as the standardized interview method. Patton (1980) states that "by controlling and standardizing the open-ended interview the evaluator obtains data that are systematic and thorough for each respondent but that reduce flexibility and spontaneity". Among the advantages to this method is the fact that the exact survey instrument is available for inspection by users of the research, and the interview is focused so that time spent on the interview may be more effectively controlled (Patton, 1980).

2.9.7 Researcher Bias.

To the degree that people are involved in a research project, there is the possibility for researcher bias that may affect the conduct and outcomes of the research. Maxwell (2005) noted that what a researcher brings to the project may be considered bias, and most research designs try to separate this influence from the project. However, researcher experience can be a valuable component. Maxwell continued: "Qualitative researchers have long recognized that in this field, the researcher is the instrument of the research". The researcher's prior experience in the field of study can serve as an important backdrop to the development and conduct of the research. However, it is important for the researcher to be forthright in disclosing his/her "biases" that may apply to the project (Appendix A).

2.10 Summary

This chapter presented relevant prior literature that formed the foundation for the methods used in meeting the goal and objectives of this research project. Material covered included identification and properties of engineered wood products and connector hardware, construction standards and codes, inspection types and approaches, the construction industry, research philosophy and methods, and validation concepts.

3.0 Methods

This chapter provides a discussion of the methods used to achieve the goal and objectives of this project. Topics include:

1. Basis for research methods
2. Preparation of a proposed methodology and software application
3. Construction of an information gathering survey instrument
4. Selection of subject matter experts (SME)
5. First round of expert interviews
6. Development of a spreadsheet presentation of the interview results
7. Creation of a custom software application embodiment of the developed methodology
8. Second round of expert interviews
9. Project validation
10. Author statement of bias

This project was undertaken to develop a process to address the need for enhanced residential inspection tools related to engineered wood products (EWPs). The basis for accomplishing this goal is the pooled experience and knowledge of expert inspection professionals and product manufacturers and distributors. By deriving and applying information and commentary provided by these experts a visual inspection methodology, associated knowledge base, and software application for the inspection of EWPs and connector hardware (CH) for prescriptive non-compliance were developed.

3.1 Methodology Development

This section describes the processes used to develop and refine the inspection methodology. The Delphi method is an iterative process to obtain, refine, and validate qualitative information. This information is obtained from subject matter experts, who also edit the gathered information and reach consensus on the final revisions of the information. At each step the information is collected and revised, and then presented to the SMEs for further revisions, or approval. Together these processes are referred to as a round. The collectively approved results are then suitable for use in the project final outputs. The development process used in this research utilizes a modification of the classical Delphi method that is described in section 2.8.1. The modifications are listed below:

1. Personal interviews are used as the primary information gathering technique instead of mail or email surveys.

2. All experts have strengths and insights to contribute and all expert opinions are considered equally valid. Therefore, the extent of agreement between SMEs for acceptance of the responses was deemed irrelevant.

3. Peer nomination of experts.

4. Processing and validation of the use of the data included in the SME approval process.

5. No attempt was made to incorporate quantitative analysis techniques for the qualitative information. The researcher chose not to attempt to impose

quantitative methods on the research because of the subjective nature of assigning numerical values to non-numeric data. This may lead readers to interpret the results as definitive, rather than indicative.

3.1.1 Research Procedures.

An overview of the iterative methodology development process is illustrated in Figure 3 – 1. The in-person interview method for the inspector experts has been chosen due to the likelihood of a higher response rate, the relatively small number of SMEs, a lower risk of nonresponse, the detailed nature of the information to be gathered, and the availability of the interviewer to provide immediate clarification to the respondents

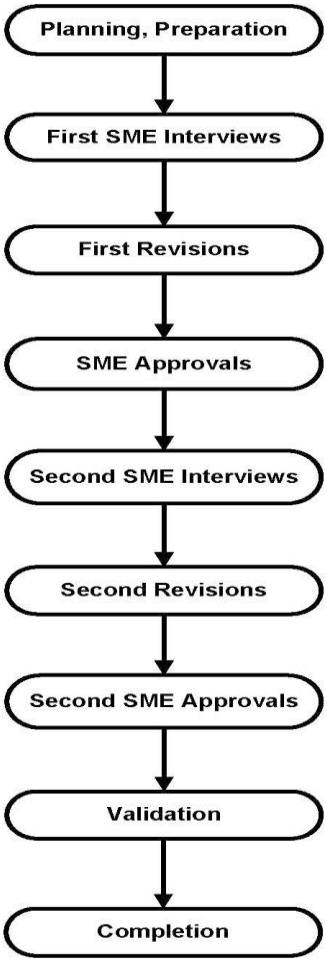

Figure 3 – 1: Methodology development process overview.

(Scheuren, 2004). The personal interview method also allows for a longer period in which to collect the data than other survey methods such as telephone and mail interviews (Dillman, 1978). A telephone interview with email follow-up was conducted for the industry representatives as described in section 3.1.5.

Ford and Sterman (1997) report that use of multiple sensory modalities can enhance the quality of knowledge elicited from SMEs. Therefore, two sensory modalities – visual (written and software) and auditory (interview) – were used to elicit inspector expert inputs. All participants were contacted to explain the objectives of the project and to verify their willingness and availability to participate in the process, including the two face-to-face interviews.

The initially proposed inspection methodology developed in this project builds on the inspection methods discussed in Chapter 2 and the researcher"s experience. The developed inspection methodology is comprised of a global approach to inspecting and individual inspection techniques for each EWP and connector. At each round of development, the resulting expert information provided new insights, and prompted revisions to the methodology and the software. Figure 3 – 2 shows a more detailed version of the methodology process. The three groups of SMEs (building code officials (BCOs), home inspectors (HIs), and industry representatives (IRs)) were selected and the roles were defined for each group. Together, BCOs and HIs are referred to as „inspection SMEs".

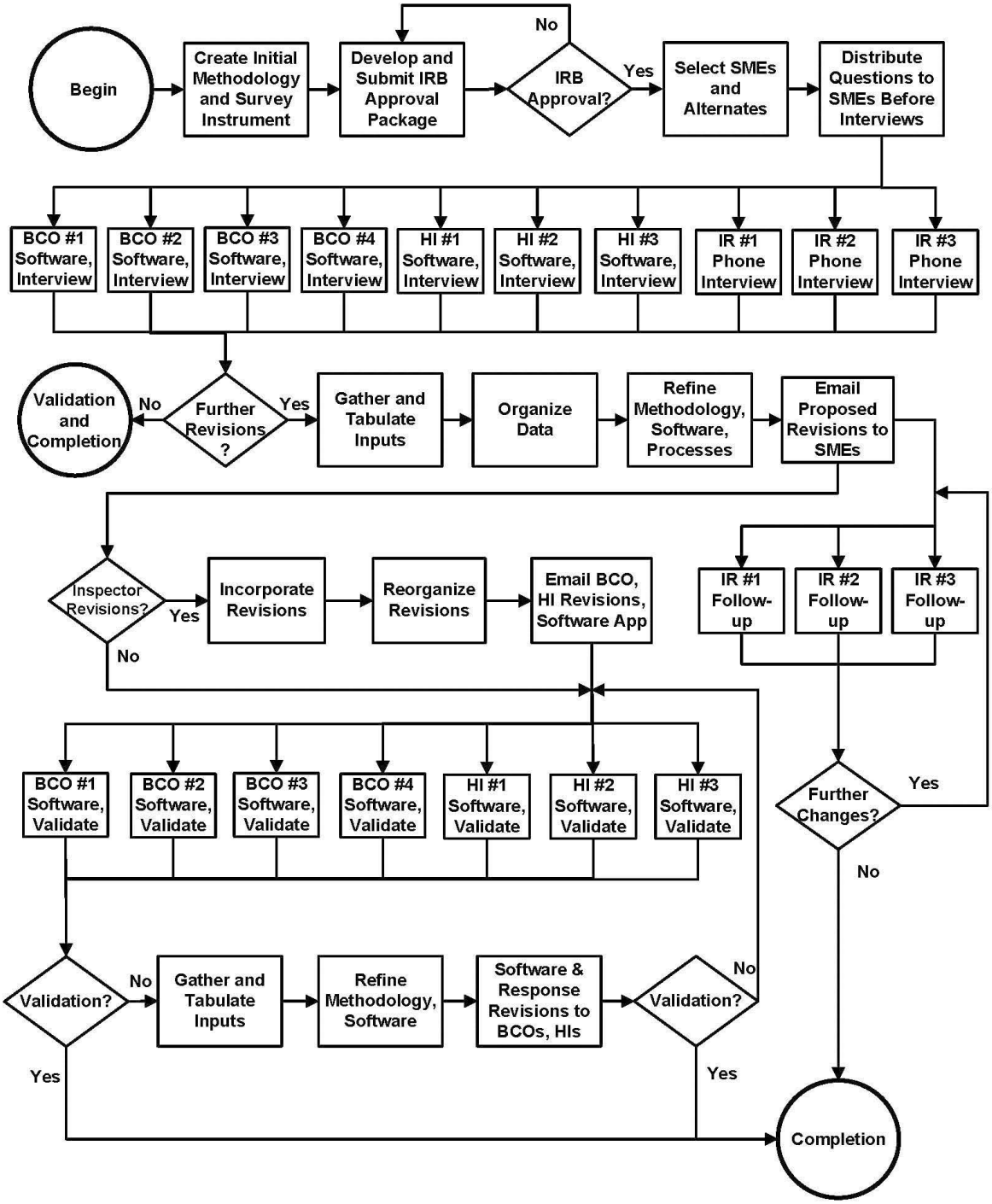

Figure 3 – 2: Methodology development process details.

After approval of the survey instruments by the Virginia Tech Institutional Review Board (IRB) and development of the proposed methodology and software application, the first

round of interviews took place. Personal interviews were conducted with each inspection subject matter expert, and the survey questions were administered to the BCO and HI SMEs. SME responses were recorded and organized.

Revisions of the inspection methodology were sent to the SMEs for approval or further revision. Some experts responded with suggested revisions, which were made. The researcher then scheduled the second round of expert interviews. During these interviews, the software application was demonstrated, and the second set of survey questions was administered. Second interview questions were designed to obtain information on project validation, and solicited any further revisions the inspection SMEs thought necessary. None of the SMEs suggested further changes, and all validated the project. From the last box in row three of the figure 3 – 2 (the diamond shaped „validation" box), the researcher followed up with the industry representatives (IRs) to ensure their satisfaction with the proposed changes. Some IRs wanted further changes, which were made. Final project validation used BCO and HI input. The IR SMEs were not consulted.

3.1.2 Survey Instrument Development.

The survey instrument questions were developed based on methods of the American Statistical Association (Scheuren, 2004). Questions were designed to ensure that the survey collected the correct data needed for the project, that the survey was not too long, and that the questions were internally consistent. The Virginia Tech Institutional Review Board (IRB) approved the survey instruments and methods employed prior to conducting any field interviews. The IRB-approved disclosure form is shown in

Appendix B, and the interview survey instruments for both the first and second rounds of interviews are found in Appendix C.

The survey instrument concentrated on five elements:

1. Determining which brands of the selected EWPs and connector hardware are most prevalent in the Commonwealth of Virginia
2. Determining the aspects of each selected component that are subject to the highest risk of prescriptively non-compliant installation
3. Determining what source documentation is required for EWP/CH inspections
4. Determining the methods used by experts to inspect EWP/CH components
5. Validation of the process and outputs

3.1.3 Anonymity of Subject Matter Experts.

Assuring and maintaining the anonymity of each participant is an important requirement of the research protocols involving human subjects at Virginia Tech. This anonymity helped insure the reliability of the developed information by shielding the respondents from employers who might take offense at certain responses, and perhaps of equal importance, protected the respondents from possible pressure or ridicule from the other experts. Discussions and conclusions drawn from the results of this research necessarily include remarks that cannot be publically attributed to any given expert. Therefore, some observations cannot be explicitly referenced without compromising the anonymity of the respondents.

3.1.4 Definition and Selection Process for Subject Matter Experts.

SMEs were drawn from three groups of professionals who possess relevant skills and knowledge. The chosen professions were building code officials (BCOs), home inspectors (HIs), and representatives of the EWP and CH manufacturing industries (IRs). SMEs were defined by the researcher for each profession, and given to peers within each profession nominate candidates considered best qualified. Peer nomination for participation for the HIs required expertise in new residential framing inspections (including EWP and CH installation issues), and the development and deployment of successful inspection techniques in the field. Nominated HIs were contacted and asked to participate. The nominees were asked to select alternate experts in the event they could not complete the project. All initial nominees agreed to participate.

Each SME response was considered relevant by virtue of the individual SME"s selection as an expert. Therefore, all SME inputs were equally valid. The degree to which the experts mentioned a given method is therefore a point of interest rather than a criterion for validity.

3.1.4.1 Building Code Official Selection.

Criteria for expert selection of building code officials (BCO) included:

1. Personal inspection experience
2. Hold the Virginia certification of Residential Building Inspector
3. Employment as a building official with authority over a staff of inspectors

Because of these qualifications, The BCOs possess knowledge not only from their field experience, but also from the combined experience of their subordinate inspectors. The BCO experts were selected from geographic regions of the Commonwealth of Virginia that met the pre-determined parameters for wind speed (90 mph) and seismic category (categories A and B).

There were four BCO experts selected. The first BCO selected was recommended by members of the author"s doctoral advisory committee. This BCO subsequently nominated other BCO experts. This is sometimes referred to as the „snowball" sampling method. All of the nominated BCOs agreed to participate in the project. In addition, the nominees were asked to select alternate experts in the event they could not complete the project. None of the alternates was needed.

3.1.4.2 Home Inspector Selection.

Local chapters of the American Society of Home Inspectors (ASHI) serving the three largest population centers that met the pre-determined parameters for wind speed (90 mph) and seismic category categories A and B) in Virginia were contacted and asked to nominate three members from their local chapter specializing in new home inspections. Interestingly, the chapters from two of the regions had no members they thought met the requirements for this project, so all HI experts came from a single region. The pre-determined requirements for expert status were:

1. Expertise in pre-drywall residential construction
2. Certification as a home inspector in Virginia
3. Earned the ACI designation (ASHI Certified Inspector)

Each nominee was contacted and agreed to participate in the project. This process ensured that the selected experts represented the best qualified HIs according the opinions of other professional inspectors.

3.1.4.3 Industry Representative Selection.

IRs were selected based on referrals from academic and industry professionals solicited by the researcher. Each IR was chosen based on extensive knowledge of the industry, product categories, and product installation problems. IR SMEs represented open web truss manufacture, EWP manufacture, and connector hardware manufacture. IR experts were included in the project to provide in-depth knowledge of the manufactured products within their industries, rather than on field inspection experience. IRs who investigate problems on jobsites did so at the request of others who actually discovered the problems.

3.1.5 Interviews with Industry Representative Subject Matter Experts.

The IR SMEs expected contribution was knowledge of product specifications and the ability to identify high-risk areas. The interview survey instrument developed for the BCOs and HI experts was not administered to the IR experts. An email describing the project and the desired information was sent to each IR prior to the interview. IR SMEs were interviewed using both telephone and face-to-face interviews. The resulting conversations were recorded in writing, and the responses entered into a spreadsheet along with other SME responses.

The IR SMEs were consulted for their expertise in product specifications and use restrictions and were not intended to participate in the validation process. Feedback

was provided to the individual SMEs regarding the disposition of each recommendation to ensure that the responses and suggested corrections were properly incorporated into the methodology. This step is `important because it allowed the SMEs to validate the assumptions, inspection approach, and research approach that form the basis for the methodology validation. All SMEs validated the accuracy of their responses as recorded by the researcher.

One of the three IRs was a team representing a cross section of the firm"s operations, including truss fabrication and serving as a distributor for other EWP manufacturers" products. Manufacturers of relevant products employed the other two IRs.

3.1.6 First Interviews with BCO and HI Subject Matter Experts.

Once the BCO and HI SME nominees were selected, a copy of the project consent form (Appendix B), an abstract of the project, and a copy of the survey questions (Appendix C) were provided by email to each expert. The interviewer then scheduled an appointment with each inspection professional to conduct the personal interview.

Specific topics covered in the survey included:

1. The code inspection process
2. SME perspectives on the inspection process
3. The implications to the builder that may result from completion of a home inspection
4. Relevant EWP types and manufacturers

5. High-risk areas for prescriptive non-compliance of the selected EWPs and CH
6. Inspection methods for each type of EWP and CH
7. Acceptable documentation for determining prescriptive non-compliance of EWPs and CH
8. Methodology development process assumptions and process validity
9. Validity of the approach to the computer software application
10. SME opinions on EWP installation versus dimension lumber installation

During the first interview with the BCO and HI SMEs, survey questions and the software application were presented to each expert. Each interview lasted approximately two hours. Responses were manually recorded on the survey forms and audio recordings were made on a laptop computer using the built-in recording software. During the first interview, the SMEs were asked to evaluate the utility of the proposed methodology construct, to identify high-risk non-compliant problems involving EWPs, to evaluate the overall inspection process, to identify successful inspection techniques, and to validate the proposed methodology and software application framework.

Prior to the personal interview and after receiving the interview survey questions, one BCO had circulated the survey questionnaire to other experts within his department asking for their inputs. He then presented the aggregated responses from all his subordinate experts in addition to his own. These responses are considered equally valid because the designated SME approved all the responses. Therefore, all responses were attributable to this BCO SME. Another BCO included the participation of four other professionals selected by the BCO SME during the actual personal

interview. Again, responses of the group were attributed to the BCO. All of the HI experts participated as individuals without consulting others.

3.1.6.1 Spreadsheet Development.

After the first set of BCO, HI, and IR interviews were completed, a summary spreadsheet was developed to present all SME raw responses to each survey question and documented which expert made each response. All SMEs were identified by their category (BCO, HI, and IR) combined with a number. Responses and summary comments used these identifiers. This spreadsheet showed all answers given by all BCO and HI experts, and each expert was given the code that enabled each expert to identify only their own responses. To preserve anonymity, no respondent was given the code to identify the other experts, so the other responses were anonymous and could be evaluated on merit alone. The confidentiality of each expert‟s identity was thereby maintained. All BCOs and HIs responded to this email and some asked that changes be made to their own responses. The BCO and HI experts verified by email that their own responses were properly recorded, and none challenged the legitimacy of the other inspection experts‟ responses. The IR experts were contacted by email with a listing of their original comments and asked to make any needed changes. This feedback was the first step in the ongoing validation process.

As an example, Table 3 -1 shows the responses given for question five, which is “What are the most common areas of prescriptive non-compliance with LVLs and PSLs?” and identifies which comments each expert made.

Table 3 – 1: SME responses to question 5. "What are the most common areas of prescriptive non-compliance with LVLs and PSLs?" (from the first interview).

		Responses	HI-1	HI-2	HI-3	BC-10	BC-11	BC-12	BC-13	IR-1	IR-2	IR-3
	a	Cupped beams	1									
	b	Splayed at fasteners	1									
	c	Poor support	1									
	d	Cuts and holes	1	1	1					1		
	e	No plans and don't want them	1									
	f	If review plans, sets up an unrealistic expectation for entire house	1									
	g	Modifications	1	1	1							
	h	Notches	1	1	1		1	1		1		
	i	Bearing		1	1	1	1	1	1			
	j	Fasteners	1	1	1		1					
	k	Drilling or cutting		1	1		1	1	1			
	l	Hangers	1		1							
	m	Concentrated loads			1							
	n	Attachments	1		1	1						
	o	Size of point load blocking (same footprint as columns)					1					
	p	Support, size and number of jack studs					1	1	1			
	q	Fastening patterns for multi-ply members			1	1		1				
	r	Correct component for the application?	1				1					
	s	Side load applications - (higher risk than top load applications)				1						
5	t	Appearance of structural problems				1						
	u	Beams out of plumb		1								
	v	Multiple member fastening	1	1	1	1	1	1	1			
	w	Uplift protection					1					
	x	Hanger hardware probs: wrong size & type, mix up w/face &top		1	1		1	1				
	y	Angle cuts						1				
	z	Improper repairs	1		1			1				
	aa	Undersized						1				
	bb	Sill plate compression							1			
	cc	Prefer columns be run through subfloor and ceiling/floor cavity							1			
	dd	Dropped headers							1			
	ee	Blocking							1			
	ff	Holes through beams and columns							1			
	gg	Excessive floor deflection	1									
	hh	Concentrate on individual components	1									
	ii	Follow load paths	1									
	jj	If something is not there, can't tell that it is missing	1							1		
	kk	Support	1	1	1							
	ll	Stacked columns only toe-nailed										1
	mm	Wood columns embedded in concrete										1
	nn	Poor column-to-beam connection such as bent nails only										1

All original responses in are shown in Appendix D. Due to the variety of responses and differences in the exact wording, a method for reorganizing and aggregating the raw responses from the first interview was developed. In some cases, the responses were reorganized based on the researcher's judgment (Figure 3 – 2). There were six reasons for reorganization:

1) The answer to a particular question was more appropriate as a response to another question in the survey. In these cases, the answers were relocated within the spreadsheet to the appropriate question.

2) The response addressed issues not within the scope of this research. These responses were deleted.
3) The answer was a duplicate of another response. Duplicate answers were consolidated.

4) The responses restated the defined parameters of the project. These responses were deleted.

5) General conversation regarding the construction environment and causal factors leading to installation problems took place during the interviews. This information was combined with the responses in question 22a ("Do you use or recommend a specific inspection plan? If so, what inspection plan strategy do you recommend?".)

6) Many of the inspection techniques provided for the individual components were repeated, suggesting they were a part of a larger inspection methodology. These responses were aggregated.

Once the reorganized data was compiled, justifications for the suggested changes were inserted next to each comment for which a revision was proposed for tracking purposes. The reorganized data resulted in a second spreadsheet, which is found in Appendix E. The IR revisions were included next to individual responses in the justification spreadsheet. Table 3 – 2 shows the reorganization of responses to question five as an example.

Table 3 – 2: Reasons for revisions of responses to question five. (What are the most common areas of prescriptive non-compliance with LVLs and PSLs?)

5	a	Cupped beams	
	b	Beam splayed at fasteners - doesn't make full contact	
	c	Poor support	Deleted. Duplicate of 5kk.
	d	Cuts and holes	Deleted. Duplicate of 5k.
	e	No plans and don't want them	Relocated to question 6. Not a risk area.
	f	If review plans, sets up an unrealistic expectation for entire house	Relocated to question 6. Not a risk area.
	g	Modifications	Added. Moved from 6.
	h	Notches	
	i	Bearing	
	j	Fasteners	
	k	Drilling or cutting	
	l	Hangers	Deleted. Duplicate of 5x.
	m	Concentrated loads	
	n	Attachments	
	o	Size of point load blocking (same footprint as columns)	
	p	Support, size and number of jack studs	
	q	Fastening patterns for multi-ply members	
	r	Correct component for the application?	Deleted. This is a design/engineering decision, not prescriptive.
	s	Side load applications - (higher risk than top load applications)	
	t	Appearance of structural problems	
	u	Beams out of plumb	
	v	Multiple member fastening	
	w	Uplift protection	
	x	Hanger hardware probs: wrong size, wrong type, mix up w/face &top	
	y	Angle cuts	
	z	Improper repairs (BCO12 repaired as if dimension lumber)	
	aa	Undersized	Deleted. This is an engineering decision, not prescriptive.
	bb	Sill plate compression	
	cc	Prefer columns be run through subfloor and ceiling/floor cavity	
	dd	Dropped headers	
	ee	Blocking	
	ff	Holes through beams and columns	
	gg	Excessive floor deflection	
	hh	Concentrate on individual components	Deleted here. General method. Included in question 22a.
	ii	Follow load paths	Deleted here. General method. Included in question 22a.
	jj	If something is not there, can't tell that it is missing	
	kk	Support	Added. Moved from question 6.
	ll	Stacked columns only toe-nailed	
	mm	Wood columns embedded in concrete	
	nn	Poor column-to-beam connection such as bent nails only	

A third spreadsheet (Appendix F) was distilled from the justification spreadsheet showing the final reorganized responses. This spreadsheet was provided to the inspection SMEs, who approved the reorganization. Table 3 - 3 shows the reorganized responses for Question 5. The final spreadsheet provided the basis for the results, discussion, and conclusions presented in Chapters 4 and 5.

Table 3 – 3: Reorganized final responses for question five. (What are the most common areas of prescriptive non-compliance with LVLs and PSLs?)

5		What are the common problems with LVLs and PSLs?
	a	Cupped beams
	b	Beam splayed at fasteners - doesn't make full contact
	g	Modifications
	h	Notches
	i	Bearing
	j	Fasteners
	k	Drilling or cutting
	m	Concentrated loads
	n	Attachments
	o	Size of point load blocking (same footprint as columns)
	p	Support, size and number of jack studs
	q	Fastening patterns for multi-ply members
	s	Side load applications - (higher risk than top load applications)
	t	Appearance of structural problems
	u	Beams out of plumb
5	v	Multiple member fastening
	w	Uplift protection
	x	Hanger hardware problems: wrong size, wrong type, mix up w/face &top
	y	Angle cuts
	z	Improper repairs (BCO12 repaired as if dimension lumber)
	bb	Sill plate compression
	cc	Prefer columns be run through subfloor and ceiling/floor cavity
	dd	Dropped headers
	ee	Blocking
	ff	Holes through beams and columns
	gg	Excessive floor deflection
	jj	If something is not there, can't tell that it is missing
	kk	Support
	ll	Stacked columns only toe-nailed
	mm	Wood columns embedded in concrete
	nn	Poor column-to-beam connection such as bent nails only

3.1.7 Second Interviews with BCO and HI Subject Matter Experts.

The second interview had three main purposes: to present the revised information and software application to the inspection SMEs, to ascertain whether further revisions were needed, and if not, to seek validation. Prior to the second interview, the researcher provided the inspection SMEs with information on how to obtain a trial copy of the software platform, and a summary of the results from the first interview. The researcher

also provided the companion stand-alone file of EWP and CH specific reference information developed from this project. Each interview lasted approximately two hours.

The majority of time was spent demonstrating the software features and capabilities and soliciting suggestions for revisions. None of the experts suggested further revisions. The second survey instrument consisted of questions that sought of obtain suggestions for revisions and for validation of the project. The survey was administered to the BCO and HI SMEs, and the responses were manually recorded on the survey forms. Appendix C shows the survey forms.

3.1.8 Validation.

The project validation procedures were derived from the iterative Delphi method, as well as Creswell and Miller (2000) (Table 2 - 2), who recommend the use of multiple procedures when feasible. The present research uses two of the procedures from Creswell and Miller (2000) for research validation - member checking and the audit trail.

Member checking uses the study participant lens, because the participants developed, refined, and validated the process and outputs. This approach contributes directly to the high „face validity" validation method (Carson, 1989; Law & Kelton, 1982). The audit trail documented procedures to enable evaluation by persons external to the research. Validation is an integral part of the development process rather than a separate step at the end of the project.

3.1.8.1 Member Checking.

The first validation technique was the member checking process described in Chapter 2, which required ongoing dialog with the experts during and between the personal interviews to validate or refine the methodology, data handling, and the development process (Carson, 1989). Member checking required obtaining SME inputs and revisions to develop the methodology and software.

3.1.8.2 Audit Trail

The researcher maintained all records relating to the research process to enable interested parties to reconstruct the entire process so far as possible. According to IRB procedures, all information pertaining to the personal identities of the SMEs must be stored separately from project data and may not be revealed in the project. However, the anonymous SME responses and comments in the spreadsheets as well as the subsequent justified and final spreadsheets are presented in the Appendix section.

3.2 Development of the Inspection Software Application

Sources: Manufacturers literature and survey questions 1 – 25, 41, and 43.

This section presents the methods used to develop the software application. The software developed during this research project is referred to as an application rather than a program, because the researcher did not develop the underlying software program. The original contribution consists of the specific inspection application

developed for use within the base software program. Topics covered in this section include the application development process, selection of the software, and functions of the program and application.

An initial software concept was developed by the researcher based on inspection literature, inspection experience of the researcher, and an extensive search of reference documentation. Reference material was obtained from the IRC, manufacturer literature, and standards published by authoritative organizations such as the Truss Plate Institute and APA – The Engineered Wood Association.

Figure 3 – 3 illustrates details of the software development and validation process based on BCO and HI SME information. The process is a modification of the Delphi method, and is very similar to that described for the methodology development, except that there are no IRs involved.

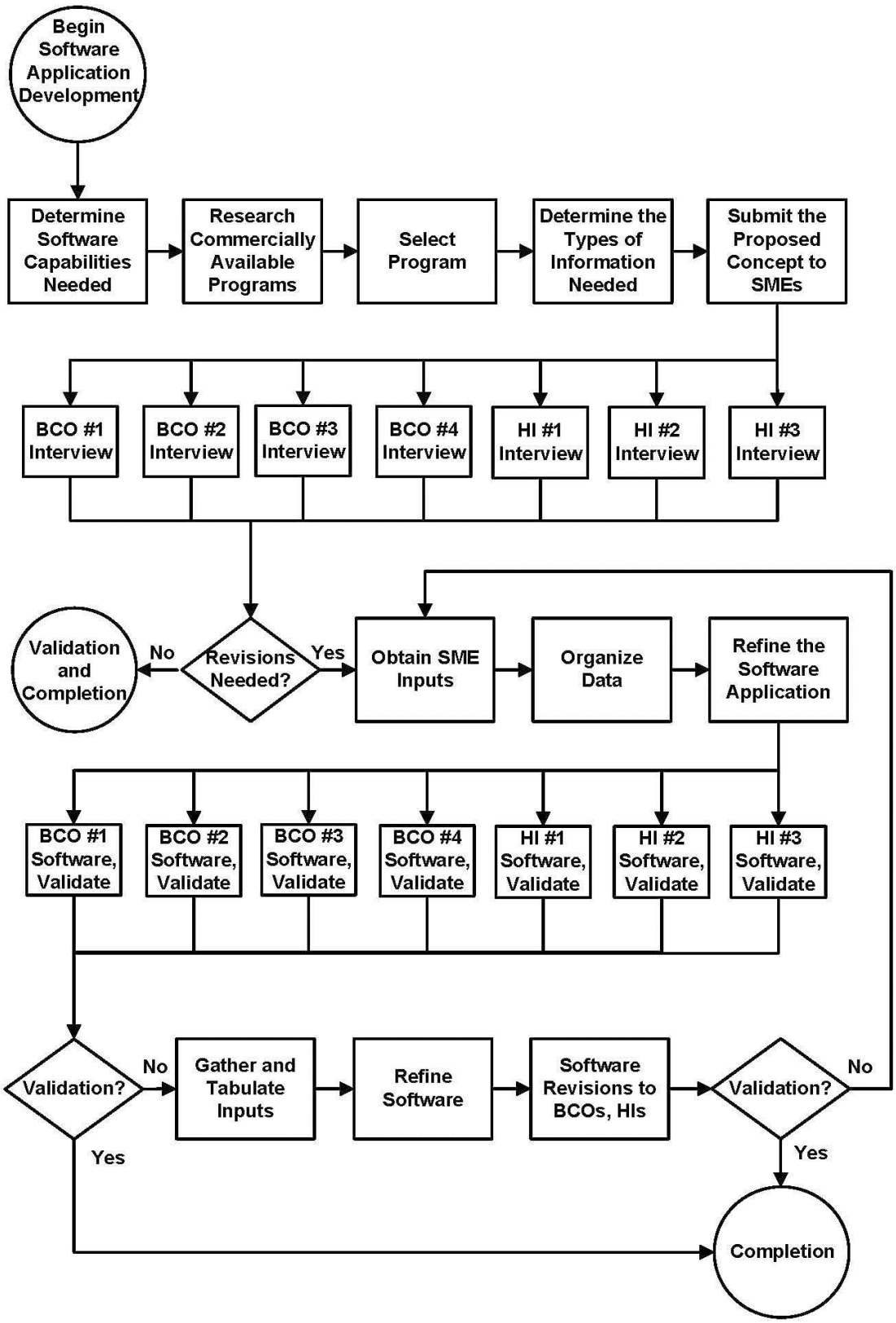

Figure 3 – 3: Details of the software application development process.

3.2.1 Selection of the Inspection Software Platform.

The selected software program was required to have the following features to facilitate development of the custom application. Besides being readily available, affordable, and flexible, the following features were required:

1. Create an application without extensive writing of computer code
2. Include prepared wording and custom illustrations
3. Incorporate and annotate digital photographs
4. Include reference documentation
5. Insert active hyperlinks
6. Provide easy access to information and the recommended inspection techniques
7. Convert the report into the portable document format (PDF)
8. Upload the report to the internet for delivery to the client

Several inspection reporting software programs are available on the market that could meet the above requirements to varying degrees. After conducting preliminary research into these programs, one was purchased, and an initial application was creating within that program"s framework. The selected software application was the HomeGauge home inspection software program (HomeGauge, 2010). A fully functional trial version of the HomeGauge software may be downloaded from www.homegauge.com.

HomeGauge allows the inspector to have complete control over the final inspection report. The inspector determines whether to include or exclude the prepared wording, source documentation, and illustrations, and the freedom to add his/her own comments

and photographs focused on observations the inspector made at the inspected property. Additional forms such as an inspector contract, a copy of industry standards of practice, standard disclaimers may be uploaded into the software for inclusion in the report as desired. HomeGauge also offers a web-based report storage delivery system whereby the report is uploaded to a server and a password is sent to the client, who then has the option to forward the report to parties of the client‟s choosing.

3.2.2 Input from Subject Matter Experts.

The initial software application concept was presented to the SMEs during the first interviews, and each was asked to provide information on the following topics:

1. Relevant types of EWPs and CH
2. Commonly used brands
3. Aspects of high risk for each component
4. Inspection techniques
5. Reference materials
6. Technical illustrations

The proposed application concept was presented to the BCO and HI SMEs in the form of screenshots and verbal discussion. The researcher gathered and organized SME responses from the first interview and incorporated them into the software application. The SME responses indicated a need for inclusion of two more manufacturers for engineered wood products, the need to simplify the use of the software, and suggestions for additional reference material. Updating the application required further research to locate and incorporate the required information.

3.2.3 Second Expert Interviews

During the second interviews, each expert received a copy of the developed computer application, which could be loaded into the HomeGauge software. Although not a stated objective of this project, each BCO and HI expert was given a separate file containing the reference material found in the software application to allow the inspector to access the reference material included in the software application. This file made it easier for the experts to find information without having to create a report.

The application was demonstrated to the BCO and HI SMEs during the second interviews. After reviewing the application, the experts were asked to contribute improvements needed for the program. None of the experts had further suggestions, and each validated the application. Had further revisions been needed, another round of information collecting, application revision, and expert evaluation would have taken place.

3.3 Summary

Chapter 3 began with a discussion of the goal and objectives and continued with the methods used to attain the goal and objectives of this project. Topics discussed included:

1. Preparation of a proposed methodology and software application
2. Construction of an information gathering survey instrument

3. Selection of subject matter experts (SME)

4. First personal interview with each SME

5. Development of a spreadsheet presentation of the interview results

6. Creation of a custom software application embodiment of the developed methodology

7. Second round of expert interviews

8. Project validation

Chapter 4 presents and discusses the research results.

4.0 Results and Discussion

This chapter presents the results of the research project, and addresses methodology development; contributions of individual experts; the selected components, brands, and risk areas; selection of subject matter experts; spreadsheet development; software development; and project validation.

4.1 Pre-Responders

Society has long recognized the value provided by first responders to disasters. Fire fighters, Police officers, and emergency medical technicians (EMT) are among the professionals recognized in this context. However, these professionals can only respond after the disaster occurs.

Other types of professionals render less visible services that seek to prevent disasters, and were referred to as „pre-responders" by one of the BCO experts surveyed . Building designers and practitioners of the construction inspection professions are among such persons. Construction of a well-designed building depends on the knowledge and expertise of the contractors to properly implement the designed plans. It is at this stage that deviations from building codes and design specifications can occur. When inspections are properly conducted, disasters are less likely to occur. This pre-response can help minimize damage to property and injuries to occupants.

The subject matter experts included in this study come from different fields with different approaches to building safety. The IRs provided common concerns that manufacturers of EWPs and connector hardware encounter. These manufacturers publish detailed recommendations as to the uses and installation of their proprietary products in order to decrease the risk of improper installations. In the absence of specifically designed plans for a given component or building, the manufacturer specifications provide the prescriptive methods and details of installation. The manufacturer‟s recommendations are incorporated by reference into model building codes. In effect, this body of product information transforms building codes from a single document into a large and potentially unmanageable set of standards.

Building code officials are legally empowered by the authority having jurisdiction (AHJ - the legally constituted governmental and administrative jurisdictional entity) to evaluate submitted building plans, to approve or modify them, and to enforce compliance with the approved plans. Due to the prevalence of alternative building products such as EWP‟s, the building official may require documentary evidence that these products meet the minimum code requirements, and are therefore deemed to comply with provisions of the code. One BCO estimated that 90% of all homes cannot be properly inspected using the building code document alone.

Independent third party fee-paid home inspectors are typically employed by purchasers of property at their own expense. The purchaser is not normally included in the code inspection process, and may feel the need for another set of eyes to look at the property and provide educational information about the construction process. HIs do not have

access to design documents or approved building plans, and therefore rely on generally accepted construction practices when evaluating wooden structures.

Manufacturers and timber engineers develop new and better EWPs to reduce cost and material use while improving performance. It is, therefore, a plausible proposition that proprietary information will continue to be added to the knowledge base of building codes, increasing the difficulty in wielding code knowledge during construction activities and field inspections.

The type of inspection developed in this project is not necessarily a code inspection or a home inspection. Some basic assumptions are:

1. There is no time limitation for the inspection
2. The purchaser of the real property is the client
3. No destructive testing will be conducted
4. The inspector will not provide engineering analysis of problems.

The inspector"s job is to identify potential problems based on prescriptive specifications so that the client can obtain proper evaluation and repair specifications from a registered design professional (RDP). In some cases, the inspector may note installations that appear to violate prescriptive requirements, but which may later turn out to have been professionally designed and/or approved by building plan reviewers. In defense of this approach, one industry expert recommends that inspectors "Always assume that all non-compliant issues are important, regardless of where they fall in the hierarchy, or whether some special engineering design could be involved. Inspectors probably will not know if deviations are approved, so report them all."

Some non-compliant issues are of greater concern than others are. The SMEs referred to this as the hierarchy of significance of construction issues. Issues involving the risk of structural failure and human injury are much more important than cosmetic or low-level performance issues such as squeaky floors. However, even lower priority problems may result in callbacks to builders, which are costly and may involve invasive damage to finished surfaces in order to effect the repairs.

All of the experts interviewed consider EWP prescriptive non-compliance to be a common phenomenon. This finding validates the basic premise of the project, establishing this line of inquiry as being worthy of consideration in the inspection of residential housing.

4.2 Methodology Development and Validation

The lack of a prescriptive inspection method standard is of particular interest because other less accomplished inspectors are less likely to have developed well-defined procedures. The modified Delphi process described in Chapter 2 was used in this project to gather and organize the information, present it to the experts for confirmation of correctness, revising it, and validating it based on the concept of high face validity appears to have caused the experts to re-evaluate their own responses, assumptions, and techniques. The experts‟ responses to the evolving methodology development appear to have affected their approach to the inspection process. Some experts commented that they changed their way of thinking about inspecting and were

incorporating this new awareness into their practice. Some indicated that they learned new ideas from the anonymous responses of other experts, and that they became more sensitive to the importance of maintaining correct and up-to-date reference documentation.

All of the respondents used specific examples of inspection scenarios encountered to illustrate risk areas and inspection methods. These examples provided useful insights into the inspection problems and the thought processes used by the experts to reach a solution. The researcher was able to extract techniques from these experiences that added detail to the formal responses to the survey questions.

Using methods from the literature review in Chapter 2 for other inspection-related fields and by obtaining the input of subject matter experts, this project incorporated the most current and reliable information available. The following discussion presents the results from the development process.

At the conclusion of the final interview, each BCO and HI SME was given the opportunity to validate or dispute whether the project met his or her requirements for validation based on its „high face validity". The BCO and HI SMEs unanimously validated the project through the second interview survey questions by approving the following:

1. The revised methodology includes all the important elements of an EWP pre-drywall inspection.
2. The revised methodology is based on valid assumptions.

3. The reference materials included with the inspection software are sufficient, and no additional source documentation was needed.
4. There was no need for improvements to the revised methodology.
5. There were no improvements needed for the software application.
6. The revised methodology, assumptions, knowledge base, and software application met the requirements for high face validity.

At the conclusion of the second interview, each BCO and HI SME signed a statement that reads:

Dissertation Inspection Project Validation Statement

Methodology for the Visual Inspection of Selected Engineered Wood Components and Connector Hardware for Prescriptive Non-Compliance at the Pre-Drywall Stage of Residential Construction

In my professional opinion, the above-referenced project meets the criteria for „high face validity", and is validated.

4.3 Relevant Component Manufacturers, Risk Areas, and Inspection Techniques

The expert survey results include three matrices that define the scope of the project. Table 4 – 1 shows the manufacturers identified by the BCO and HI SMEs whose products are most commonly used in the geographic region covered by this project. The initial version of Table 4 – 1 was presented to the BCO and HI SMEs in the first interview survey, and each was asked to indicate which combinations of manufacturers and products were most prevalent in the geographic regions in which each SME

worked. The SME responses determined a need to expand the range of manufacturers from those originally proposed, and the revised matrix is shown in Figure 4 – 1. Based on the SME survey responses, the checked boxes for each manufacturer and EWP and CH combination indicate the authoritative reference documentation needed to conduct a pre-drywall EWP inspection. For example, BCOs and HIs determined that documentation for prescriptive compliance for Louisiana Pacific I-joists, beams and columns, rimjoists, OSB sheathing and OSB subfloor was needed. Blank areas in Table 4 – 1 indicate areas where no combinations of manufacturer exist, or were not deemed necessary by the BCO and HI SMEs. For some combinations of manufacturers and components, no information was available. To the extent that this information was available, this reference material was collected and incorporated into the software application so that inspectors could access it directly while performing inspections.

Table 4 – 1: Components and manufacturers selected for this project.

Manufacturers →	**i-Level**	**GP**	**LP**	**Huber**	**Nordic**	**Boise**	**Jager**	**SST**	**USP**
Components ↓	**Authoritative Documentation Needed for Each Checked Item**								
I-Joists	√	√	√		√	√	√		
Beams	√	√	√		√	√	√		
Columns	√	√	√		√	√	√		
Rimjoists	√	√	√		√	√	√		
OSB Sheathing	√	√	√			√			
OSB Subflooring	√	√	√	√					
Connector Hardware								√	√
MPCWT	**No manufacturer-specific requirements for MPCWT (ANSI/TPI, 2007).**								

Abbreviations used in Tables 4 – 1, 4 – 2, and 4 – 3 are defined below:

1. i-Level refers to i-Level by Weyerhaeuser
2. GP refers to Georgia Pacific
3. LP refers to Louisiana Pacific Building Products
4. Huber refers to Huber Engineered Woods
5. Nordic refers to Nordic Engineered Wood
6. Boise refers to Boise Cascade, L.L.C.
7. Jager refers to Jager Engineered Wood Products
8. SST refers to Simpson Strong-Tie Company, Inc.
9. USP refers to United Steel Products Structural Connectors, a Mitek Company
10. MPCWT refers to metal plate connected wood trusses
11. CH refers to connector hardware
12. EXT refers to exterior

Prior literature suggests the need for identifying not only the components subject to the inspection, but the individual aspects of the components that present the highest risk for non-compliant installation (ASTM, 2001). The SMEs identified these areas as shown in Table 4 – 2. A proposed version of Table 4 - 2 was presented to the BCO and HI SMEs in the first interview survey, and each SME was asked to revise the suggested list of high-risk areas for each type of manufactured component. The checked boxes show the combinations of risk areas and EWPs and CHs that the SMEs believe warrant special attention during the inspection process. Blank areas within Table 4 – 2 are problem areas that do not exist, or were deemed by the BCO and HI SMEs to be

unnecessary. These risk areas were incorporated into the software application, and the researcher developed prepared comments and illustrations to help identify and explain these problem areas. SME responses to this matrix established that EWP and CH prescriptively non-compliant installations are a problem, and that the high-risk areas for each component are identifiable.

Table 4 - 2: Component high-risk aspects.

Components →	I-Joists	Beams	Columns	Rimjoist	OSB Sheathing			MPCWT	CH
High Risk Aspects ↓					Floor	Roof	EXT		
Bearing	√	√	√	√	√	√	√	√	√
Holes	√	√	√	√	√	√	√	√	√
Notches	√	√	√	√				√	
Fasteners	√	√	√	√	√	√	√	√	√
Blocking	√	√	√		√	√	√		√
Permanent Bracing	√		√					√	
Shipping, Handling	√	√	√	√	√	√	√	√	
Installation	√	√	√	√	√	√	√	√	√
Overhanging Sill Plates				√					

BCO and HI SMEs determined that there is a need for individual component inspection techniques, and that some inspection techniques may vary depending on where the structural component is located in the house. The initial version of table 4 – 3 was presented to the BCO and HI SMEs in the first interview survey, and each was asked to evaluate the need for specific inspection methods. Table 4 - 3 shows the important types of inspection techniques identified by the SMEs for the inspection of the EWPs and CHs. Some component inspection techniques were determined to be the same regardless of location within the house, while others may vary from one zone to another.

For example, the inspection of roof I-joists from inside of the attic may vary from techniques used when inspecting roof I-joists from the upper level, whereas CH inspection techniques were the same regardless of location within the structure. Blank areas in the matrix indicate combinations of components and zones where no inspection techniques were deemed necessary. Each technique is detailed in the following sections.

Table 4 - 3: Inspection techniques matrix.

<table>
<tr><th colspan="13">Checked Boxes Indicate the Need for a Specific Inspection Method</th></tr>
<tr><th>Components →</th><th colspan="2">I-Joists</th><th>Beam</th><th>Cols</th><th>Rims</th><th colspan="3">OSB Sheathing</th><th colspan="2">MPCWT</th><th colspan="2">Connectors</th></tr>
<tr><th>Uses →</th><th>Roof</th><th>Floor</th><th colspan="3"></th><th>Wall</th><th>Roof</th><th>Floor</th><th>Roof</th><th>Floor</th><th>Top</th><th>Face</th></tr>
<tr><th>Zones ↓</th><th colspan="12">Inspection Methods ↓</th></tr>
<tr><td>Attic</td><td>√</td><td rowspan="3"></td><td rowspan="4">√</td><td rowspan="4">√</td><td rowspan="4">√</td><td rowspan="4">√</td><td>√</td><td rowspan="2"></td><td>√</td><td rowspan="3"></td><td colspan="2" rowspan="4">√</td></tr>
<tr><td>Top Level</td><td>√</td><td>√</td><td rowspan="3">√</td><td>√</td></tr>
<tr><td>Other Levels</td><td rowspan="3"></td><td rowspan="2">√</td><td rowspan="2"></td><td rowspan="2">√</td></tr>
<tr><td>Basement/Crawl</td></tr>
<tr><td>Exterior</td><td colspan="3"></td><td>√</td><td>√</td><td colspan="4"></td></tr>
</table>

4.4 The Construction Environment

According to the SMEs, several jobsite construction factors can affect the conduct of the inspection. The following comments provide insight into the impact of these factors on the inspection techniques developed in this project, and are provided as a background discussion of the inspection process.

4.4. 1 Jobsite Hazards.

Conditions on the jobsite may involve the risk of personal injury and the inconveniences of having no running water, no electricity, and having only rudimentary sanitary facilities. Potentially hazardous equipment is often used including cranes, lifts, generators, welding equipment, and temporary heaters. There tend to be few jobsite safety requirements, which may suggest to some workers and inspectors that safety is not much of a problem. The risk of falling is great (OSHA, 1998) even when not working in the attic or on a roof. Rough framing may present unprotected falling edges, open stairwell holes, sloped surfaces, and poorly stacked construction materials in the walking areas. Falling debris is a constant risk, as are bent nails, both of which can result in serious injuries. The surveyed inspectors recommended carrying a cellphone, wearing gloves, safety shoes, kneepads, hard hats, and overalls as part of the personal protection gear for the inspector. In cases where the builder requires special safety equipment, the inspector must comply with those requirements.

4.4.2 Site Superintendents and Subcontractor Oversight.

The BCO respondents commented on the role of the site superintendent in the context of EWP installation mistakes. According to these experts, many superintendents are primarily project managers whose primary job is to coordinate the flow of labor and materials to meet the planned project schedule, but have little understanding of the trades they supervise. Further, some superintendents are in charge of multiple jobsites, decreasing the amount of time they can spend on each project. Many superintendents are not well trained in performing quality inspections on the work done by

subcontractors, largely relegating this function to BCOs. While BCOs are tasked with the responsibility of determining code compliance, they are not ultimately responsible for code compliance. The holder of the inspection permit is usually the general contractor (GC) or the subcontractor, and the permit holder bears this responsibility. Assuming the builder provides no formal quality control inspections, and aside from the code inspection, the subcontractors who perform the actual work must enforce code compliance and quality construction practices on themselves.

Many GCs select subcontractors based on their availability and price rather than on the quality of their work (PATH, 2003). The BCO experts commented that carpenters are among the least trained and potentially the least qualified professionals on the jobsite, and are responsible for most construction errors associated with EWPs. However, the BCOs also observed that other trades are responsible for damage to EWPs even when properly installed.

4.4.3 Building Design Concerns.

The BCO and IR SMEs report that many homes have no single designer of record, and that 95% of „designers" are actually material suppliers. It is common for the engineered floor systems to be designed by one distributor, and the engineered roof system designed by another. Neither supplier knows what the other has designed, which can result in mis-matched load paths and other potential structural problems. Further, the lack of a holistic design can result in plumbers, electricians, and HVAC mechanics having to improvise the installation of mechanicals through the framing structure, often

resulting in damage and compromise to engineered wood products that have been otherwise properly installed.

The supplier/designer should specify the proper connector hardware (including brands and model numbers) needed for the job, specify the correct engineered rimjoists to match the I-joist floor systems, and specify the exact dimensions of fasteners required for connections. Distributors generally design the systems supplied with manufacturer software without visiting the jobsite. Supplier designers specifically disclaim responsibility for other aspects of the building that might affect the installation and performance of the systems provided by the suppliers.

4.4.4 Inspector Assumptions.

Each SME has certain assumptions about an inspection before it is conducted. Three of the seven BCO and HI SMEs indicated that they assume that problems exist before arriving at the house. Other experts indicated that they consider the experience of the jobsite superintendents, and how knowledgeable the builder is in making assumptions about inspections. These experts‟ inspection expectations are influenced by knowing ahead of time which builders have adequate knowledge of the proper installation of EWPs. Production builders were mentioned as having inconsistent quality, and inspections on such properties are expected to take longer than for other builders. One BCO mentioned that some framing contractors „never get it‟ when it comes to EWP installations.

Other SME opinions of the reasons for poor construction quality include allegations that installers do not review the approved plans or have the most current plans containing

the plan reviewers‟ notes. Further, BCOs believe that neither builders, carpenters, nor other trades understand EWPs and load paths, and that there is a lack of coordination between trades. Some BCOs also mentioned the existence of a language barrier on the jobsite that can impair effective communication.

4.4.5 Inspector Attitudes.

BCOs believe that more experienced inspectors will find more problems, and that this experience factor is more important than the productivity of the inspector (meaning how quickly the inspection is completed and how many inspections are completed per day). However, the BCO experts noted that the length of time one has served as an inspector does not necessarily correlate with how well the inspector performs.

Every respondent indicated that a positive inspector attitude is an important part of the inspection process. Specifically, a high level of inspector enthusiasm is important. BCO SME responses commented inspector characteristics such as „engagement‟, interest in doing a good job, and recognizing the difference between faultfinding and educating.

4.5 Summary of Expert Contributions

A summary of the degree of contribution from each expert and from each category of expert is shown in Tables 4 – 4 and 4 – 5. Since each SME response was considered relevant by virtue of the individual SME‟s selection as an expert, the number of times the experts mentioned a given comment is a point of interest rather than a criterion for

validity. It can be seen that no individual expert dominated the comments, which suggests that the responses came from a relatively balanced cross-section of the subject matter experts.

4.5.1 Responses to the Survey Questions.

Table 4 – 4 summarizes the number of comments made in response to the survey questions by each SME and each SME category, showing the percentage of the number of contributions made by each individual as a part of the SME category, and the percentage of individual contributions as a part of the total number of comments made. The home inspectors and building code officials contributed the bulk of these comments.

Table 4 – 4 shows that the three home inspector experts produced 448 comments, for an average of 149 comments per HI; the four building code officials produced 500 comments, for an average of 125 comments for each BCO; and the three industry representatives provided 50 comments, for an average of 17 comments each for a total of 998. The two groups of inspectors dominated the responses. The fact that most comments were made by inspection professionals is not unexpected because inspectors go into the field to search for problems using specific inspection techniques, while the IR experts mostly respond to issues that were discovered by others. Home inspectors provided 45.1% of the total comments, BCOs provided 49.8%, and the remaining 5.1% of comments came from IRs. These percentages indicate that no single inspection expert or category of inspection experts dominated the comments used to construct the methodology.

Table 4 – 4: Summary survey responses from the SMEs.

SME Category Groups	HI Comments			BCO Comments				IR Comments		
	H - 1	H - 2	H - 3	B - 10	B - 11	B - 12	B - 13	IR - 1	IR - 2	IR - 3
Total SME Comments	160	124	164	96	133	140	131	10	10	30

Category Comments	448			500				50		
Individual % of Category	35.7	27.7	36.6	19.2	26.6	28.0	26.2	20	20	60
Individual % of Total	16.0	12.4	16.4	9.6	13.3	14.0	13.1	1.0	1.0	3.0

Average # per Category	149	125	17

% of Category per Total	45.1	49.8	5.1

4.5.2 Expert Comments on General Construction Issues.

Many experts discussed general construction issues that affect EWP non-compliant installations and influence field inspections. Many trades are at work on a typical jobsite, each working more or less independently of the others, and focused only on accomplishing their assigned objectives. The interface between multiple trades can create areas of uncertainty where the final responsibility for a given task is unclear. Jobsite communication presents another challenge to integrating the construction process. There is often a lack of communication between subcontractors for some workers, English is not their primary language.

Table 4 – 5 summarizes the number of comments regarding general construction issues made by each SME and each SME category, showing the percentage of contributions made by each individual as a part of the SME category, and for the total number of comments made. The BCOs and IRs contributed the bulk of these comments.

Table 4 – 5 shows that the three HI experts produced one comment. This may be because HIs work for clients, and have less direct contact with builders than the BCO and IR experts do. The four BCOs produced 51 comments, for an average of 13 comments for each BCO; and the three IRs provided 36 comments, for an average of 12 comments each. Home inspectors provided 1.1% of the general construction issue comments, building code officials provided 58%, and the remaining 40.9% of comments came from industry representatives.

Table 4 – 5: Summary of construction issue responses from the SMEs.

SME Category Groups	HI Comments			BCO Comments				Industry Reps		
	H - 1	H - 2	H - 3	B - 10	B - 11	B - 12	B - 13	IR - 1	IR - 2	IR - 3
Total SME Comments	1	0	0	9	15	17	10	11	11	14
Category Comments	1			51				36		
Individual % of Category	100	0	0	17.6	29.4	33.3	19.6	31	31	39
Individual % of Total	1.1	0.0	0.0	10.2	17.0	19.3	11.4	12.5	12.5	15.9
Average # per Category	0			13				12		
% of Category per Total	1.1			58.0				40.9		

4.6 Inspection Methods

The goal of this project is to develop an inspection methodology for EWPs. This section addresses the generalized approach to inspection, and specific individual techniques derived from this research. Specific topics include pre-planning of the inspection, inspection techniques suitable for the entire structure, tools needed, inspection techniques for individual levels or zones of the house, and inspection techniques for the selected engineered wood products and connector hardware.

The inspector should develop an overall inspection method in order to establish a systematic way to examine the house and its subsystems. A standardized inspection approach minimizes the risk of overlooking components and zones that should be inspected, and overlooking non-compliant installation problems. The experts indicated that the availability of good illustrations and photographs of problem areas facilitate better inspecting. Many inspectors consider different parts of the house to be separate zones in order to systematize the inspection process, and apply specific inspection techniques to each zone. The surveyed inspectors listed several inspection zone areas including attics, individual floor levels, individual rooms, basements, crawlspaces, the exterior, and load paths. The SMEs surveyed recommend using a systematic pattern to inspect the components, such as circling the outside perimeter of each zone and walking back through the middle of the zone if the zone is very wide. The inspector must plan the inspection route with care, anticipating the tools needed, and trying to minimize climbing over obstacles and performing other risky behaviors.

The experts recommend that the inspector be familiar with the manufacturer literature for the particular products in a given structure. In cases where this literature is not available, a phone number or email address can sometimes be located on a given component, and the inspector can contact the manufacturer for details. The inspection report should always recommend to the client that EWP modifications or damage be evaluated by an RDP, and that recommended repairs be carried out properly by qualified contractors.

Ultimately, the individual inspector is responsible for the findings of the inspection and for the methods used. The use of a policies and procedures manual can help ensure uniformity of inspections between different inspectors. In addition to the standards of practice, policies and procedures can be presented as limitations to the inspection in the inspection contract signed by the client prior to the inspection. The contract may serve as the basis upon which resolution of any future complaints may be settled.

Many experts recommend beginning the inspection with an overall impression of the property from the curbside before entering the structure. They suggest viewing the flat planes of the walls and roof sheathing for signs of buckling or poor attachment. If house wrap is present, it should be properly secured and have appropriate flashing details around doors and windows. The inspector should note the current and recent weather conditions, and the use of photographs can help document the weather conditions at the time of the inspection. In some cases, adverse weather such as snow cover and heavy rain may limit the inspector"s ability to visually assess the property. One further practical inspection limitation is the degree of dirt and debris within the structure. These

limitations should be noted in the report. The following are useful techniques (as defined by the SMEs) to employ during the routine inspection process.

4.6.1 Pre-Inspection Planning.

During private home inspections, the client is encouraged to attend and participate in the inspection. This participation allows the client to ask questions about potential problems areas while they are exposed. The inspector can also provide a running narrative of the inspection, explaining the function of structural members and systems. However, the inspector must establish clear limitations on the extent of client participation. Clients should be discouraged from walking on roofs, entering crawlspaces and attics, or placing themselves at any risk from any other source of physical danger.

4.6.2 Delivery of the Report.

It is a matter of personal preference whether the inspector completes the written report during the inspection for delivery to the client immediately upon conclusion of the inspection, or whether the report will be completed later. Some SMEs process the report writing in one immediately onsite, while others complete the report later. There are times, however, when a client may need the inspection results immediately because of an impending contract contingency deadline. Missing this deadline could result in the client losing the protection of the contingency. In these cases, the inspector must be prepared to work within the client"s schedule demands.

4.6.3 Limitations.

A private inspector must be prepared to answer questions related to the inspection. Most home inspectors require the client‟s signature on a limitation of liability contract defining the scope of the inspection, and the limitations that apply. This step is not necessary during code inspections, as the purchaser is normally not present. The inspector must know and disclose personal limitations, and those of the inspection to the client. The inspector should have no financial interest in the outcome of the transactions, and should not use the inspection as a vehicle to obtain repair work. Using the inspection to obtain other employment is considered unethical under many association and state licensing requirements. Normal administrative procedures in producing the report include checking the weather, filling out forms, document limitations, note the presence or absence of the client, and make payment arrangements (ASHI, 2006).

4.6.4 Look Up.

A part of the inspection routine is developing the habit of looking up. Many problem areas are not within the normal scope of vision, and additional effort is something required to search areas above one‟s head. Attention should be focused on each inspected component and each high-risk area of each component, especially those not in direct line of sight.

4.6.5 Focus Attention.

Subject matter experts recommend inspecting every component separately by focusing attention using a flashlight, even when the illumination is not needed. The SMEs also recommend

1) Shining the light on each side of every inspected component and at each connection, with special concentration on the joints and connector hardware
2) Use of different viewing angles when possible. Sometimes a defect will be visible from one angle and not another. Observe high-risk areas from at least two viewpoints if possible.
3) Changing the angle of view by observing the issue from different sides, including vertical elevation. This may require climbing on the framing or on ladders where possible.
4) Use different angles of light orientation. Shining the flashlight at a shallow angle parallel to the surface of an inspected member often highlights defects that would not be visible when viewed face-on.

4.6.6 Enter Every Accessible Space.

Within the policies of the employer, it is important to inspect all spaces within the structure. Difficult to access spaces are often hard to construct, and may harbor hidden defects. The worker may realize that there is a low probability of someone finding problems in these areas, and put less effort into the details. Because of the possibility of construction errors in tight spaces, the inspector should make every effort to enter and inspect difficult-to-access spaces.

4.6.7 Use Patterns to Inspect.

Many EWPs are installed as a part of a repetitious pattern, which can serve as a point of reference for detecting abnormal installations. Experts suggest sighting down each roof, floor, and wall system looking for problems such as bowing or deflection, members out of plumb or level, components that are installed backwards or upside down, and missing or damaged components.

4.6.8 Get as Close to the Inspected Member as Possible.

Prior literature (ASTM, 2004; SSC, 1990) discusses the „degree" of inspection, which is defined in part by the size of defect discernible on the inspected member. For EWPs, the size of a defect may be very small (such as a loose gusset plate on a truss). Therefore, the general principle is to get as close to each member as possible, paying particular attention to high-risk areas and areas that look suspicious. Depending on the policies of the inspector"s employer, climbing and the use of a ladder or binoculars can help in this regard.

4.6.9 Degree of Inspection.

The degree of inspection as defined in ASTM F-1754 (2004) as the size of defect that can be differentiated by an inspector. This is difficult to quantify in the case of a pre-drywall EWP inspection, because some important defects are very small, and may be located in hard to reach areas. According to the experts, inspectors should be able to detect cracks, splits, holes, and fastener size and spacing for each component. In practice, this will vary according to conditions. The inspector should be prepared to justify the degree of inspection achieved if necessary.

4.6.10 Locations of Ducting, Piping, and Wiring.

The BCO and HI SMEs recommend following the pathways taken by ducts, wires, and pipes through the structure. When these mechanicals are installed, it may require cutting or drilling holes in places inappropriate for EWPs. By visually tracing these paths through the structure, one can focus closely on mechanicals that often result in non-compliant installations of EWPs.

4.6.11 Mark Observed Conditions.

Some experts suggest marking observed areas of non-compliance with a highly visible marker, lumber crayon, or ribbon to enable follow-up inspectors to locate the problems. It helps to number each occurrence on the affected member and in the inspection report so the damaged component can be accurately located by RDPs, follow-up inspectors, and repair personnel. Experts recommend documenting each marked observation photographically.

4.6.12 Single Components Versus System Concerns.

Whenever an installation error is discovered in a single component, the inspector should inspect the neighboring components as well. Errors involving multiple components are referred to as system-wide errors, and are generally of much greater concern than errors involving single components. Problems of this nature are high on the hierarchy of significance, as they may involve serious structural deficiencies. System-wide defects need immediate RDP evaluation and professional repair.

4.6.13 Zoning Strategy.

During a pre-drywall inspection, an inspector can be diverted from an orderly inspection to pursue a concern that draws attention away from the original line of inspection. This can result in missed components and areas within the house. Some inspectors find it helpful to develop a method of compartmentalizing the inspection to cover every aspect of the house, and to implement specific techniques appropriate for each zone.

4.6.14 Repairs.

Repaired areas are of particular concern, as they are a sure sign of a defect. Most field repairs for EWPs are made in a hurried manner in order to complete the structure on time, with the intention of going back to effect an engineered repair later. In some cases, appropriate repairs are not made. Common signs of improper repairs include undersized repair plates, missing or improper fasteners and fastening patterns, and sloppy carpentry.

4.6.15 Cantilevers.

Cantilevers come in two basic types. A bearing cantilever extends between five inches and 24 inches beyond the outside face of the foundation wall, and often provides structural support for floor and roof loads above it. Brick ledge cantilevers are relatively short projections that extend no more than five inches beyond the outside face of the foundation wall to allow a brick veneer to be installed beneath them. This gives the house the appearance of a flat face using both brick and siding. Cantilevers carry structural load depending on the particular application. Each cantilever has particular installation and blocking details as prescribed by the manufacturer of the I-joist floor

system. The inspector must develop a system to inspect each aspect of the cantilever, including bearing members, blocking panels, ventilation holes, and outer band closure.

4.6.16 Shipping, Handling, and Storage.

By the time the pre-drywall inspection takes place, most of the EWP structural members will already have been installed. However, it may be instructive to examine other houses being built by the same builder at the same time to observe handling and storage conditions if available. EWPs must be stored on a level, flat surface above the ground and kept in banded bundles until used, and should be wrapped to avoid exposure to moisture. I-joists may only be lifted with the webs in the vertical position, and should be nesting and preferably banded together. Inspect for signs of bowing and laterally stressed trusses (with loose or re-nailed gusset plates), beams, rim joists, sheathing, and I-joists, and inspect for signs of mud on EWP members. Mud on the structural member indicates that the component may not have been properly stored on the jobsite.

4.6.17 Inspection Teams.

For large and/or complex structures, multiple inspectors may be deployed to complete the inspection within a given timeframe. In this scenario, there is usually one lead inspector, who assigns each inspector based on inspection strengths to cover one or more specific systems (such as the framing), or one or more zones. At the end of the inspection, the lead inspector must aggregate and collate the information into a single coherent report.

4.6.18 Documentation.

Experts recommend the use photography during the inspection. Different types of photography used include digital still shots, videos, and infrared photography to record the condition of the house and any observed problem areas for inclusion in the report. This documentation helps the client understand the problems, and can remind the inspector of the house and its conditions if questions about the inspection are raised later on. Photographs can provide an excellent means of conveying important information to the client, especially for those who cannot attend the inspection. Some experts recommend using photographic images of suspected non-compliant issues to facilitate transfer of the inspection report information to others. Providing these photographs to the client in a digital format rather than in a printed format preserves the integrity of the images if reproduced, and facilitates easier distribution using electronic mail.

Some experts recommend using digital voice recorders to quickly capture information developed during the inspection. These recordings can help the inspector complete the report, and may be archived for future reference.

The final written inspection report will serve as the final authority on what was done, and on what was found. Include relevant digital images in the report to document the observations and conclusions. The client should always be advised to ask for and retain a copy of the RDP specifications for the repair of each affected EWP and CH.

4.6.19 Tools.

As a part of the overall inspection plan, the inspector should determine which tools to carry, and which ones will be needed for particular aspects of the inspection. Some tools may involve the use of two hands, requiring extra care during their use. The inspector should consider the use of a specialized tool belt for the particular tools needed for certain inspection areas such as attics and crawlspaces to safely store and access them. Different experts choose different tools in different cases, so the number of times a tool was suggested by the experts does not necessarily prove its importance. The tools recommended by the BCO and HI SMEs follow:

1) Flashlight
2) Tape Measure
3) Level
4) Camera(s)
5) Markers or lumber crayons
6) Clipboard & Checklist
7) Ladder
8) Scratch awl, Probe, Screwdriver
9) Gloves
10) Knee Pads
11) Hard Hat
12) Digital Voice Recorder
13) Folding Wooden Ruler
14) Feeler Gauge
15) Binoculars
16) Magnifying Glass
17) Laptop Computer with Internet Card
18) Overalls
19) Safety Shoes
20) Cell Phone

Based on personal experience, the researcher also suggests carrying one or more tool belts (each for specific zones of the inspection), water, toilet paper, alcohol-based hand wash, granola bars, mud boots, an extra flashlight, a nail gauge, and a moisture meter.

4.7 Inspection Techniques: Individual Products

Techniques used for the selected EWPs assume the use of a generalized inspection method developed from the SME opinions. In addition, each EWP may have manufacturer-recommended inspection techniques. Engineered wood product areas at high risk for prescriptive non-compliance were identified in Table 4 – 2, and the types of specific inspection techniques were outlined in Table 4 – 4. This section will address EWP inspection techniques. These techniques derive from the collected observations of the SMEs and the researcher"s experience as an HI. The researcher created all illustrations except a may be otherwise noted, and all the photographs were taken by the researcher. Appendix G through Appendix L provides specific EWP and CH details by manufacturer.

4.7.1 Component Inspection Process.

Figure 4 - 1 illustrates the process for inspecting individual manufactured components based on the recommendations of the surveyed BCO and HI SMEs. The center vertical path illustrates the main processes of the inspection, and the surrounding bubbles depict the factors that influence each step. The key components found in the center vertical path are:

1) Determine which component is involved for each observation

2) Make observations about potential problems

3) Document the reasoning that supports the observations

4) Generate the written report

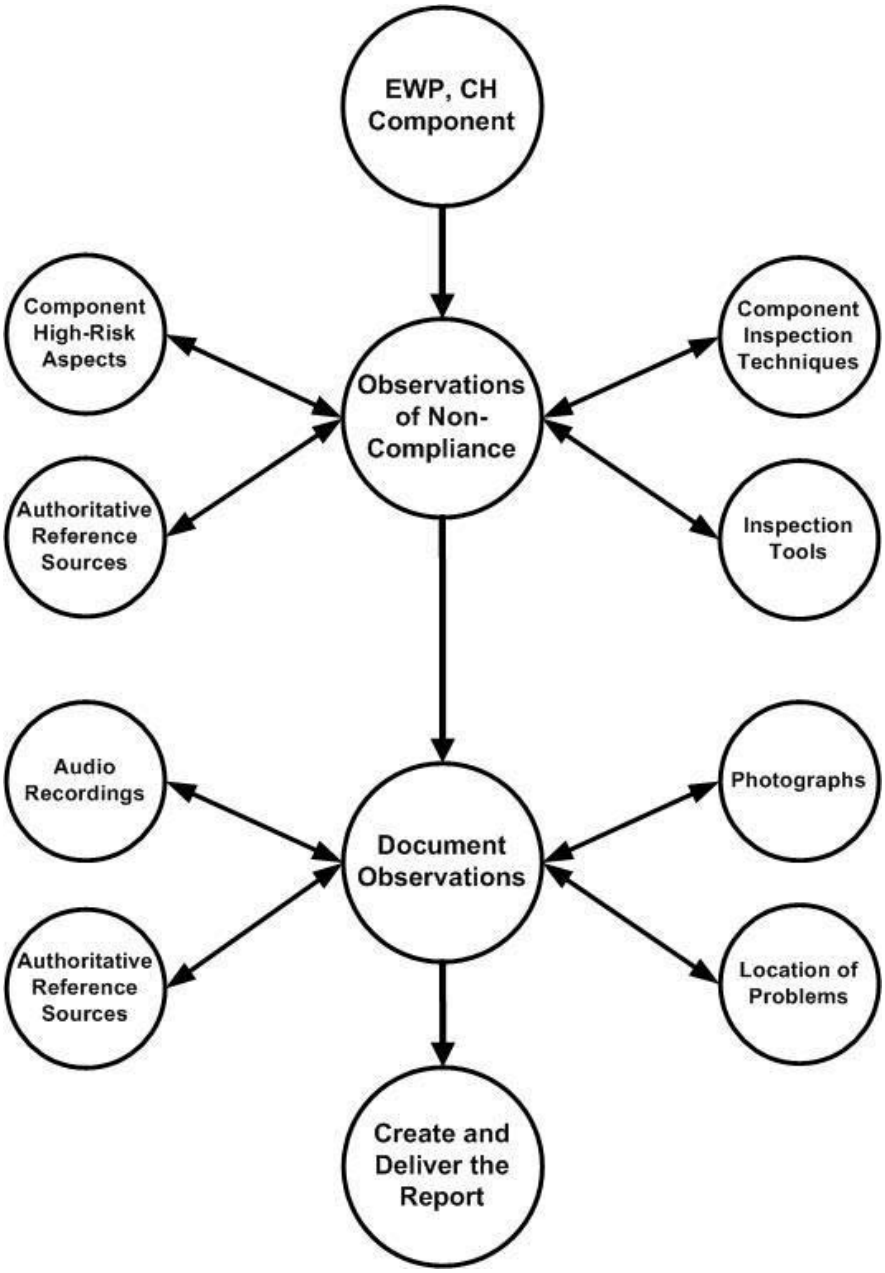

Figure 4 - 1: Inspection process for individual components.

4.7.1.1 Observations.

The SME survey results shown in Figure 4 – 1 indicate four elements the inspector must be able to use in conducting the inspection:

1. The inspector needs specific knowledge of the high-risk areas of each component. This knowledge makes it possible for the inspector to understand what potential problems to look for.

2. The inspector must develop and use an inspection methodology to conduct a systematic inspection. Systematizing the process helps the inspector to be sure s/he has covered all the elements of the structure.

3. Knowledge of specific inspection techniques enables the inspector to work within the inspection method to inspect by the component and by the locations within the house.

4. Selection of appropriate tools can enable the inspector to improve the chances of detecting problem areas. Among other benefits, the use of proper tools can help the inspector reach components of interest, illuminate them, measure them, and protect the inspector from safety hazards.

1.7.1.2 Document the Problems.

The factors that enable the inspector to provide documentation of observed problems are fourfold:

1. Some experts recommend the use of audio recording devices to collect data while conducting the inspection. These recordings can help the inspector complete the inspection report, and serve as documentation of what transpired during the inspection for future reference.
2. Authoritative reference source materials should be available to document the reasoning behind the problem observations. This informs the inspection client and any other party the client may share the report with of the validity of the inspector"s observations.
3. The inspector is advised to take photographs of each observed problem to further support the validity of the findings, and to provide a graphic record of the inspection for future reference.
4. By documenting the location of the observed problems, the inspector makes it easier for builders and design experts to find them so that appropriate actions may be taken.

4.7.2 Metal Plate Connected Wood Trusses.

Sources: ANSI/TPI (ANSI/TPI, 2007) and survey questions 20 and 21.

All MPCWTs are comprised of three major components: chords, webs, and gusset plates. The truss depends on each of these components being manufactured, handled, and installed exactly as designed. The primary prescriptive rule for inspectors to follow is that truss members shall not be cut, notched, drilled, spliced, or otherwise altered in any way. MPCWTs are more prone to manufacturing errors than other EWPs, perhaps due to the manual assembly process used by many truss manufacturers. Common

manufacturing mistakes include misplaced or missing gusset plates, knots, and sloped grain, but trusses are also susceptible to installation errors including cuts, notches, modified members, and lack of proper bracing.

Roof trusses are usually triangular, but there are many variations in shapes of roof trusses. Specialized truss designs may incorporate raised or vaulted ceilings, intermediate bearing support areas, and cantilevered overhangs. Floor trusses have parallel chords, which form the flat surfaces for the floor above and the ceiling below. Many trusses in an engineered roof or floor system are identical in shape, and often arranged in a repeating pattern. This gives the inspector the opportunity to sight down the rows of trusses looking for trusses that have repairs, are out of alignment, installed backwards, have missing members, missing bracing, or missing, re-nailed, and misaligned gusset plates.

Open web trusses allow the passage of ducting, pipes, and wiring through the members with less likelihood of damage to the structural members than I-joists. However, such damage does occur. SMEs recommend inspecting each truss for oversized ducts, loose or missing gusset plates, and cut members that violate prescriptive requirements. Further, the experts suggest inspecting each member for proper bearing, excessive deflection, damaged areas, protection against uplift, replacement of trusses with sawn lumber components, and connector hardware connections. Figures 4 – 2 through 4 – 5 illustrates the component parts of a MPCWT and common installation errors. Figure 4 – 6 illustrates the useful method of inspecting by truss patterns.

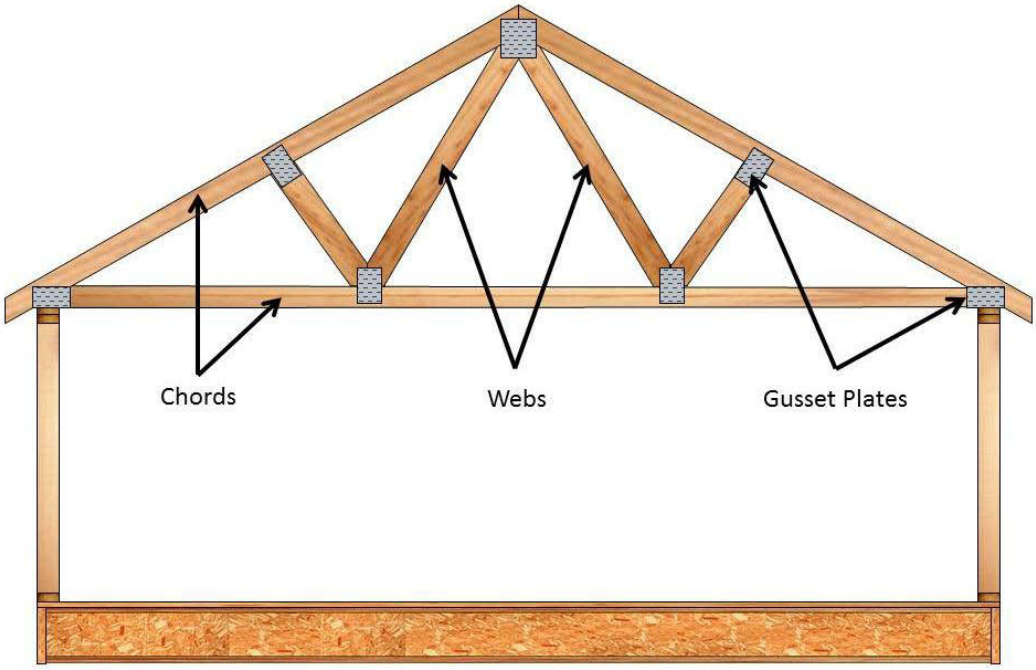

Figure 4 – 2: Metal plate connected wood truss components.

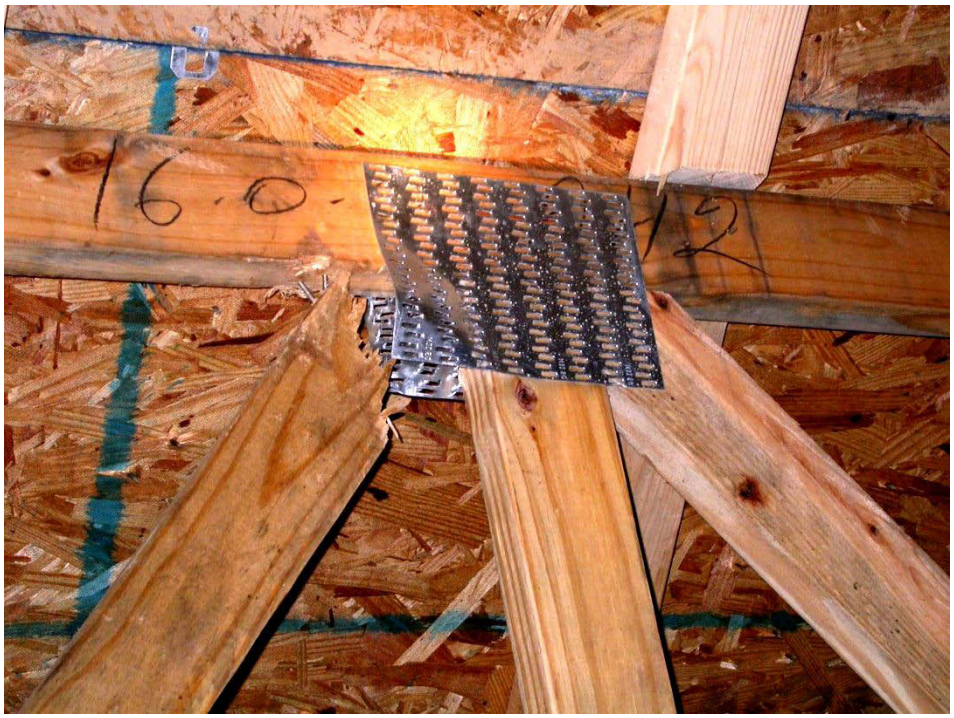

Figure 4 – 3: Damaged web and gusset plate in a MPCWT.

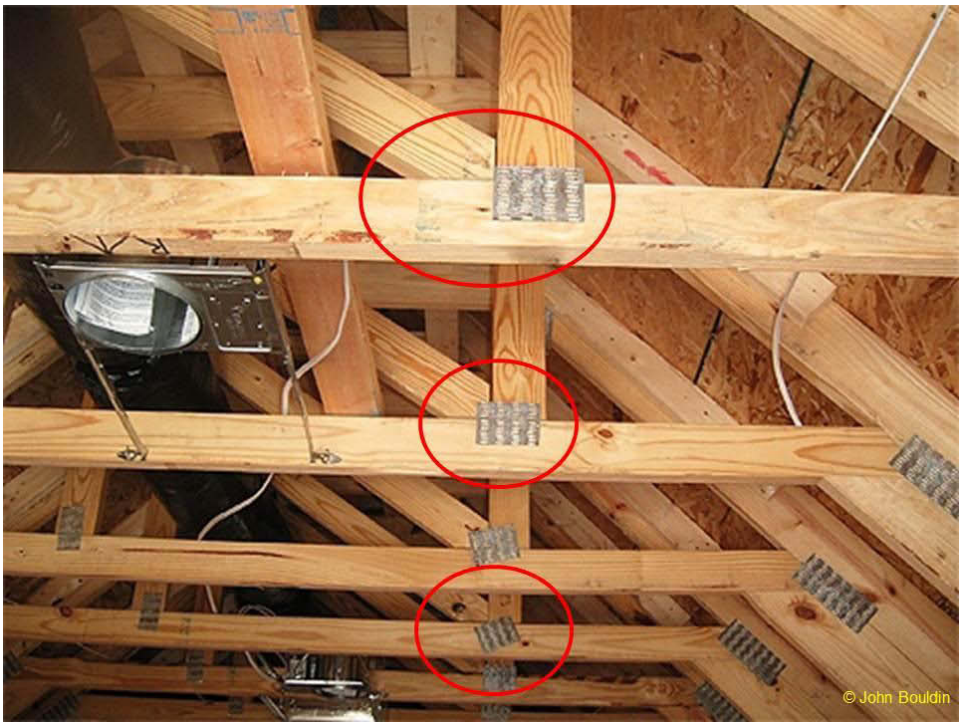

Figure 4 – 4: Offset gusset plates. These were discovered by comparison with other MPCWTs.

Figure 4 – 5: Manufacturer error - missing gusset plate.

.

Figure 4 – 6: Inspection by patterns method - missing web. The area circled in red shows a missing web discovered by inspecting the pattern of the adjoining MPCWTs.

4.7.2.1 Bracing.

Permanent lateral bracing is required on „long" compression chords and webs, and on some end frames per the designer"s specifications. Prescriptively, the inspector cannot know which members require bracing, or exactly where the bracing should be placed on the affected member unless the structural member is marked to indicate where the bracing must go. However, when lateral bracing is present, the inspector can inspect for several possible defects. The first is that continuous lateral bracing members must overlap each other by at least two trusses. The second is that diagonal bracing (illustrated in Figure 4 – 7) is required to stabilize the lateral braces against a translation of all the webs in unison (ANSI/TPI, 2007). In cases where the shapes of adjacent trusses change, straight-line bracing may not be able to attach to the specified webs

due to misalignment. In these cases, „T" bracing may be used (Figure 4 – 8). Roof gable end frames usually require additional bracing to transfer lateral loads from the gable end to the roof diaphragm structure (Figure 4 – 9).

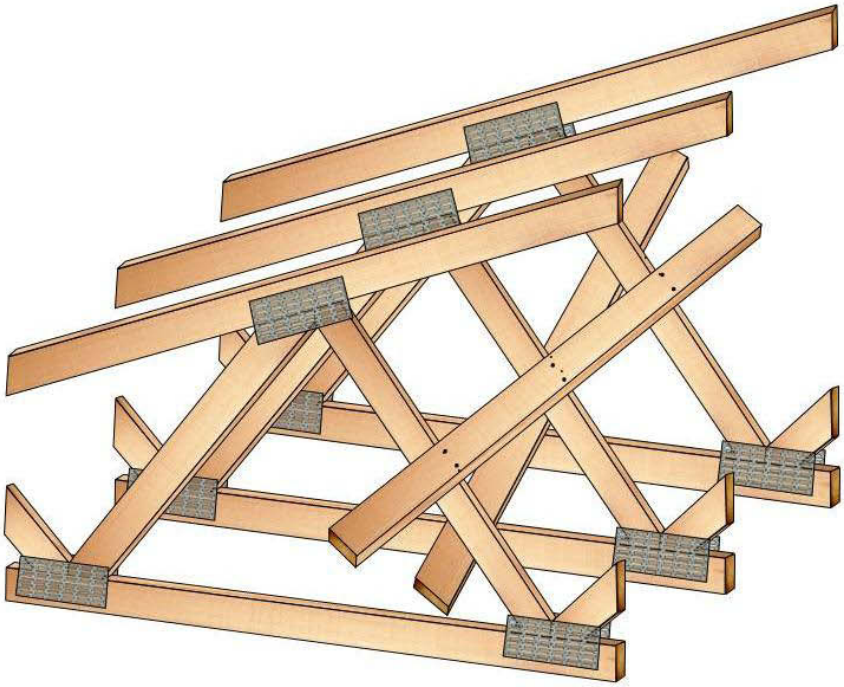

Figure 4 – 7: Diagonal web bracing.

The designer determines the location of permanent lateral bracing, and the inspector will probably not know where the bracing should be. However, some manufacturers attach a label to the members that require bracing, allowing detection of missing bracing (Figure 4 – 10).

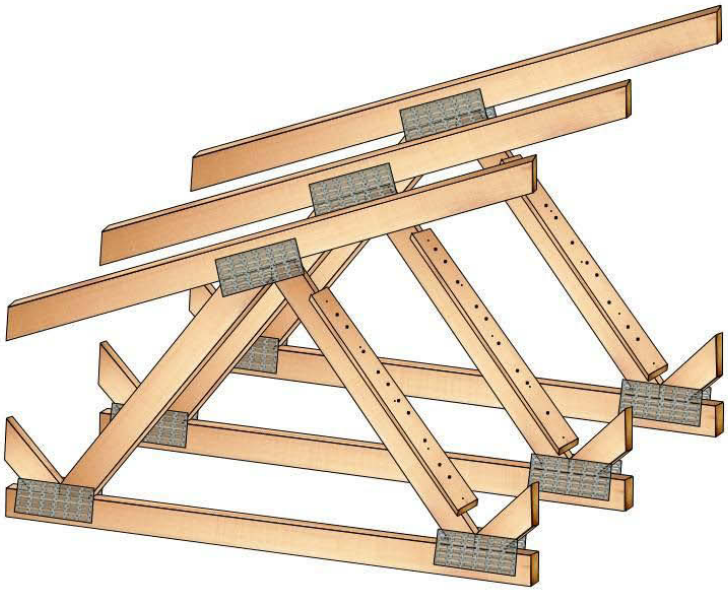

Figure 4 – 8: „T" web bracing.

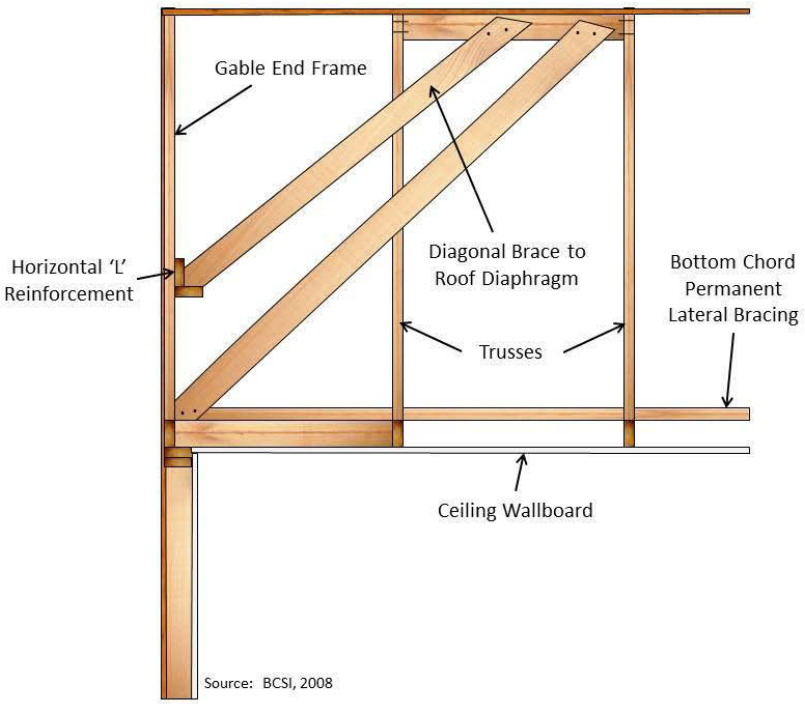

Figure 4 – 9: Diagonal gable end bracing.

Figure 4 – 10: Missing lateral bracing. The tags were attached by the manufacturer to tell the installers where lateral bracing is required. No bracing was installed.

Figure 4 – 10 shows a series of trusses with a manufacturer"s label attached to the upper gusset plate showing where the permanent bracing should have been installed, but was not.

Floor truss systems sometimes require lateral bracing known as „strongbacks". The designer stipulates the location of strongbacks, and an inspector will not know where they should be. When strongbacks are present, they must be nominal 2" X 6" minimum, and no cutting or notching is allowed (Figure 4 – 11).

Figure 4 – 11: Example of a strongback. The strongback is the horizontal 2 X 6 running perpendicular to the floor trusses. It is attached to vertical webs at each truss. (Note the missing headers over the window openings.)

4.7.2.2 Bearing.

Most trusses are designed to have only two bearing points - one at each end. If intermediate bearing points are required, the supporting structure should be located directly beneath the bearing point, and be designed to carry load. Further, the truss should have reinforcement at the bearing point. Trusses must have the proper bearing length (usually 1½ inches), no splits or other damage to the bearing ends (Figure 4 - 12), and bear on a secure structural member. Figure 4 – 13 shows a truss bearing on a single top plate, rather than on a double top plate as required.

Figure 4 – 12: Split bottom chord at bearing area.

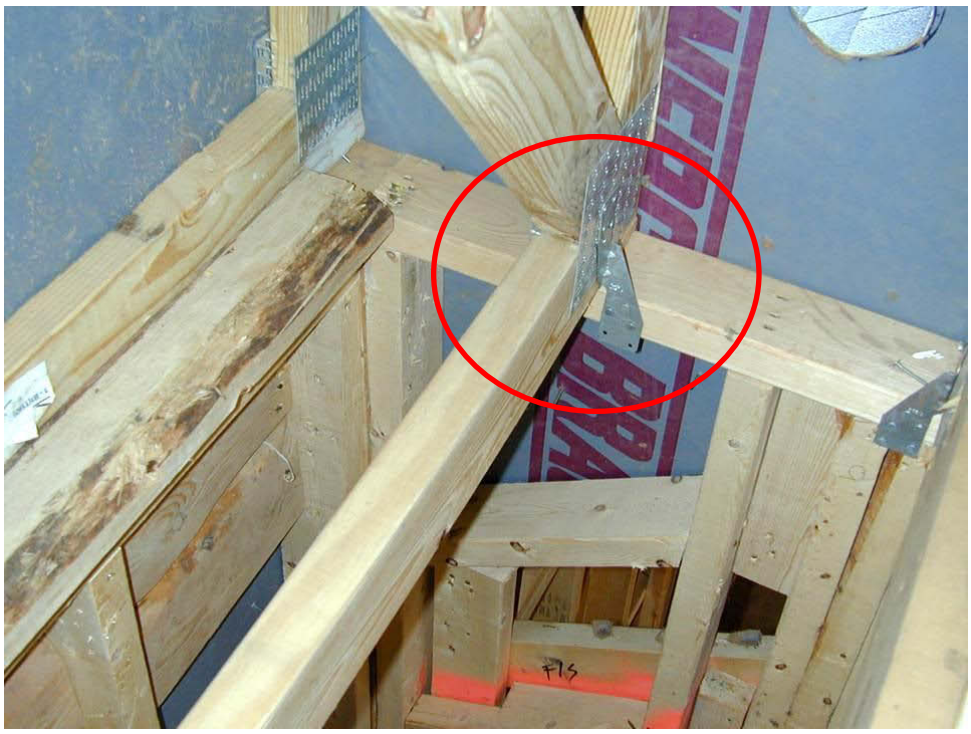

Figure 4 – 13: Improper truss bearing support. (Also note the improper attachment of connector hardware.)

4.7.2.3 Repairs.

It is not possible to inspect truss repairs prescriptively because repairs must be professionally designed for each individual condition. However, there are some issues the inspector can focus on when truss repairs are observed. For example, Figure 4 - 14 illustrates what appears to be a designed and properly installed gusset plate repair, while Figure 4 - 15 depicts a similar repair that does not appear to meet commonly designed repair specifications because the repair consists of two members. Figure 4 - 16 shows an example of small pieces of plywood being used for gusset repairs for an entire system of trusses. Compared with Figure 4 – 14, they appear to be undersized.

Figure 4 – 14: OSB gusset repair.

Figure 4 – 15: Solid-sawn lumber gusset repair. The use of two boards may not conform to the engineered repair specifications.

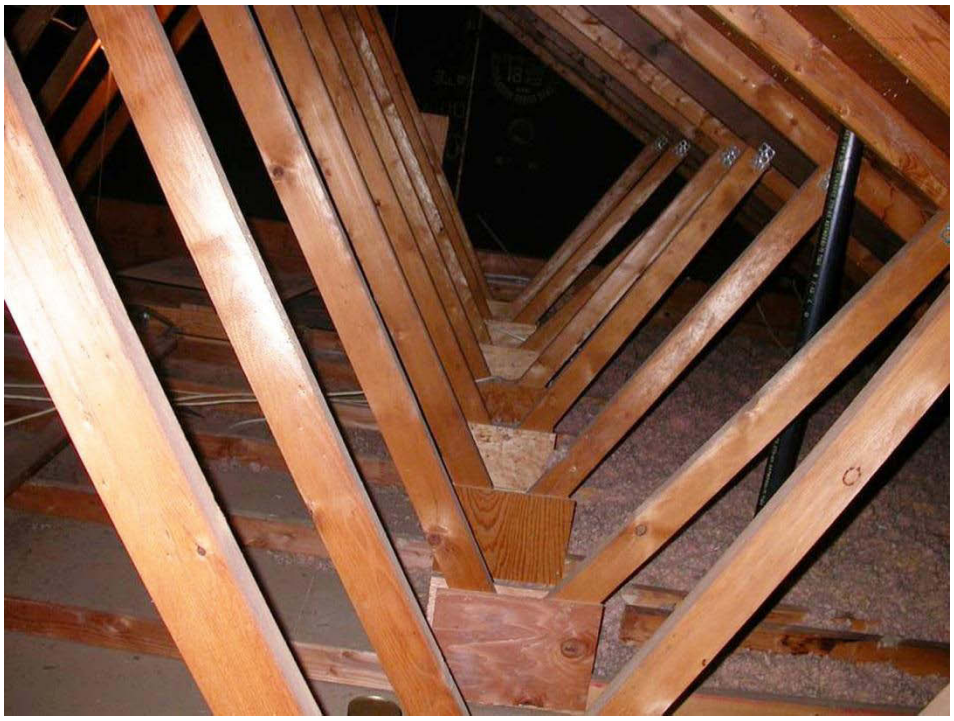

Figure 4 – 16: Relatively small gusset repairs. Repeating pattern overr a system of roof trusses.

4.7.2.4 Leaning and Bowing Trusses.

Trusses are designed to be installed vertically plumb and straight along the long axis. The inspector should sight down each truss to look for bowing, and should look at the pattern of trusses to detect out of plumb trusses. Figure 4 – 17 provides tolerances for leaning and bowing (BCSI, 2008)

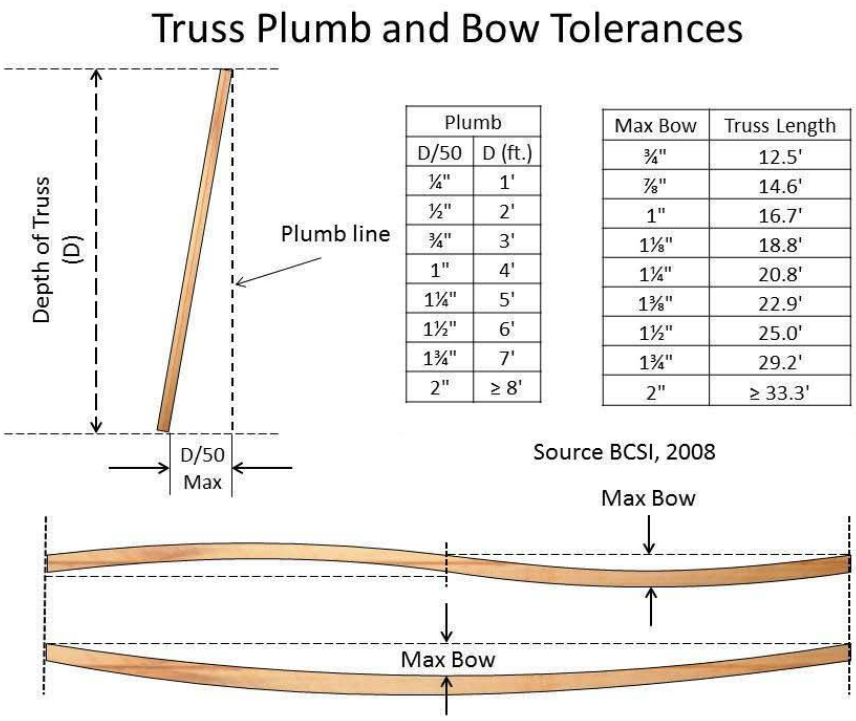

Plumb	
D/50	D (ft.)
¼"	1'
½"	2'
¾"	3'
1"	4'
1¼"	5'
1½"	6'
1¾"	7'
2"	≥ 8'

Max Bow	Truss Length
¾"	12.5'
⅞"	14.6'
1"	16.7'
1⅛"	18.8'
1¼"	20.8'
1⅜"	22.9'
1½"	25.0'
1¾"	29.2'
2"	≥ 33.3'

Figure 4 – 17: Specifications for truss leaning and bowing (BCSI, 2008). Used under fair use guidelines, 2011.

4.7.2.5 Base and Cap Trusses.

Base-and-Cap (or „piggyback") truss systems are comprised of a flat-topped base truss and a triangular cap truss, and have become popular for contemporary designs. Two part trusses are designed to accommodate the dimension limitations during shipping

imposed by roads, utility lines, and bridges. The top flat chord of the base truss is a compression member, and generally requires lateral bracing. Perpendicular purlins are laid on top of the chords to provide stability and support for the cap trusses. It is recommended that diagonal bracing be nailed per design specifications to the undersides of the top chords to avoid interfering with the purlins. Figure 4 – 18 provides an exploded view of the components of a base and cap trusses assembly, and Figure 4 – 19 shows the components assembled. Figure 4 – 20 shows a plan view of the purlins and diagonal bracing for the base truss top chords. Figure 4 – 21 depicts a system of out-of-rack base truss top chords that may be due to a lack of proper diagonal bracing. This is a system-wide error with potentially serious structural implications.

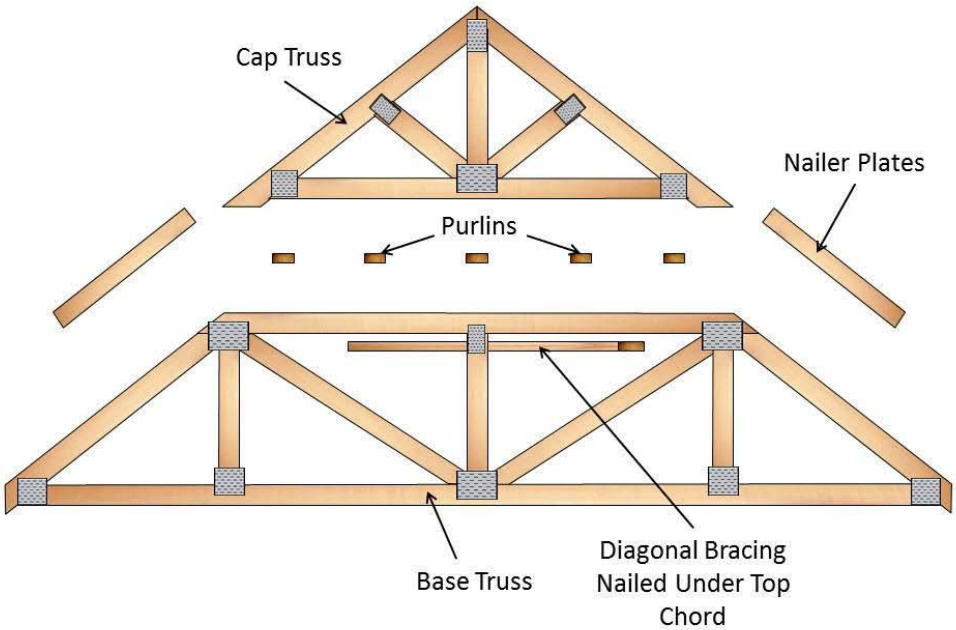

Figure 4 – 18: Exploded view of base and cap truss components.

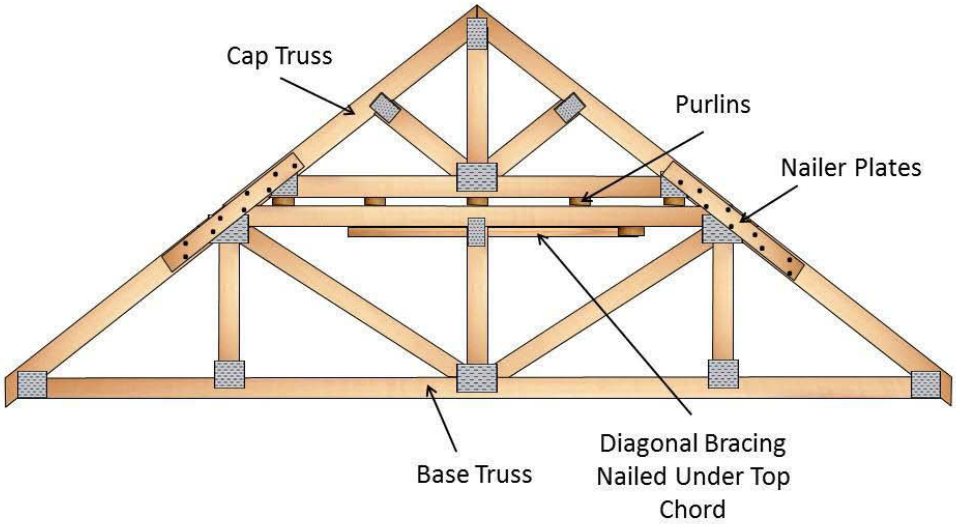

Figure 4 – 19: Base and cap truss components assembled.

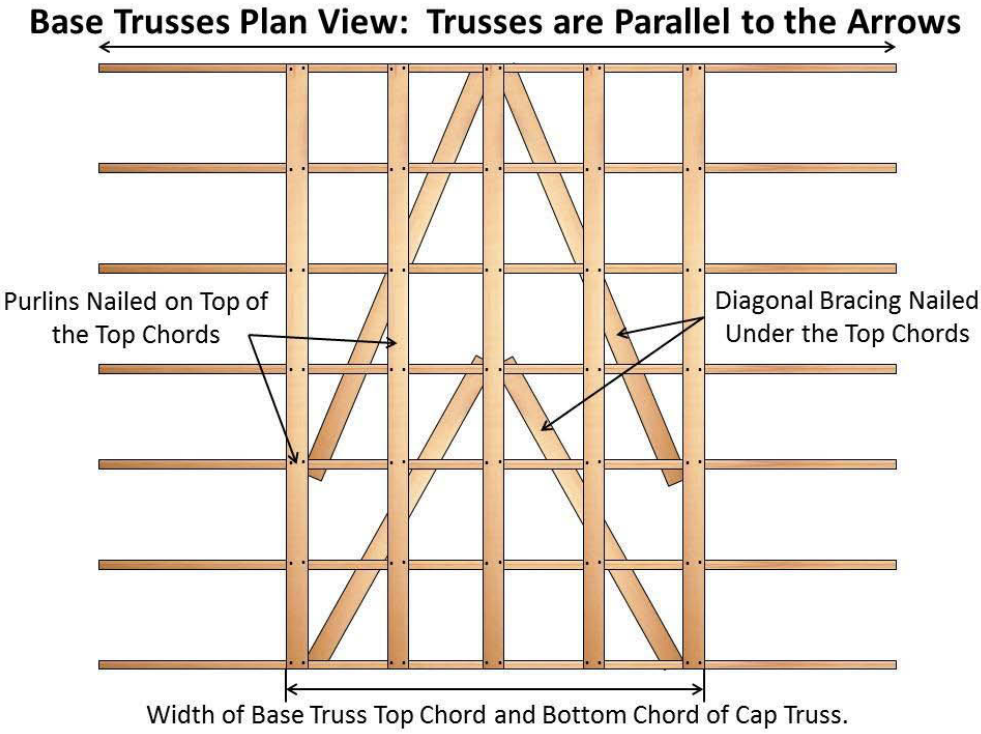

Figure 4 – 20: Plan view of base truss top chord diagonal bracing.

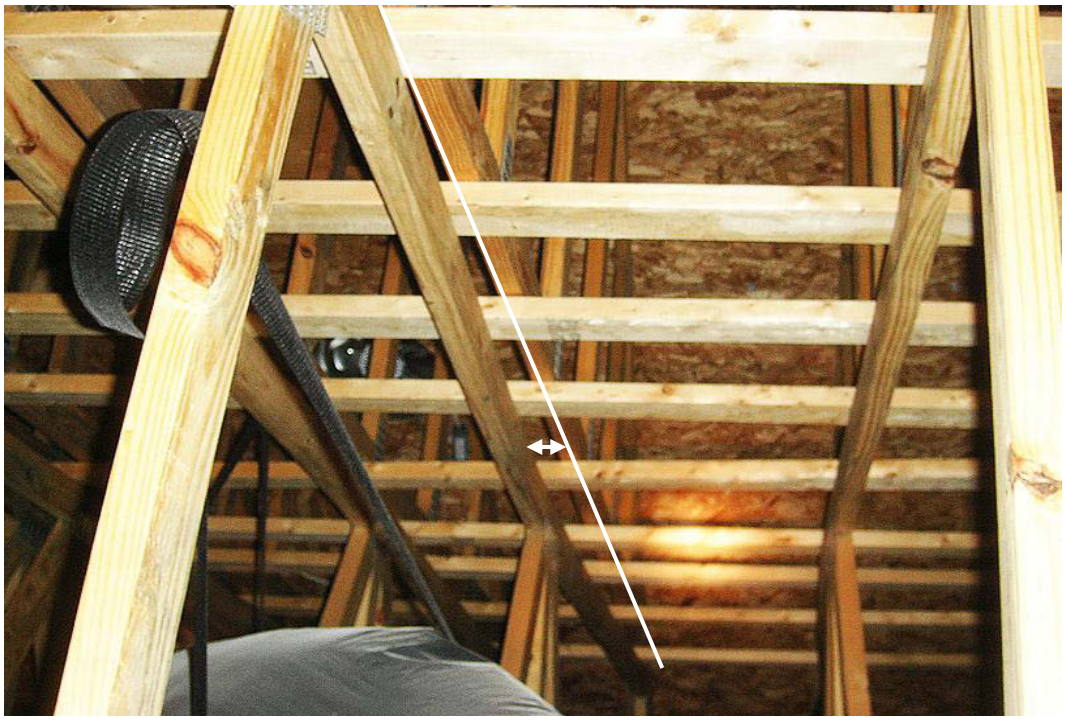

Figure 4 – 21: Racked base truss top chords.

4.7.2.6 Multi-Ply Girder Trusses.

Connections between multi-ply MPCWTs must be designed by an RDP, so inspectors do not know whether the attachment is properly executed. However, some issues to look for include drilled holes with no bolts in them (Figure 4 – 22), separation between the members, and the appearance of undersized or widely space fasteners. If there are side-loaded members on one side of the truss girder, look for more deflection on the loaded member.

Figure 4 – 22: Improper girder truss holes.

4.7.2.7 Backwards and Upside Down Truss Installations.

Trusses installed backwards or upside down can cause an irregular alignment of connection points for lateral bracing and/or improper bearing at intermediate supports. Figure 4 – 23 depicts a series of floor trusses with intermediate bearing reinforcement that does not align with the location of the bearing wall. The wall forms a part of the stairway system, and cannot be moved. The stairway wall is therefore not centered in the basement. The inspector can often spot backwards trusses by sighting down the truss rows and looking for non-uniform web configurations. Figure 4 – 24 depicts an upside down floor truss as indicated by the stamp on the truss.

Figure 4 – 23: Floor trusses installed backwards. The center bearing reinforcements in the truss do not rest on the bearing wall.

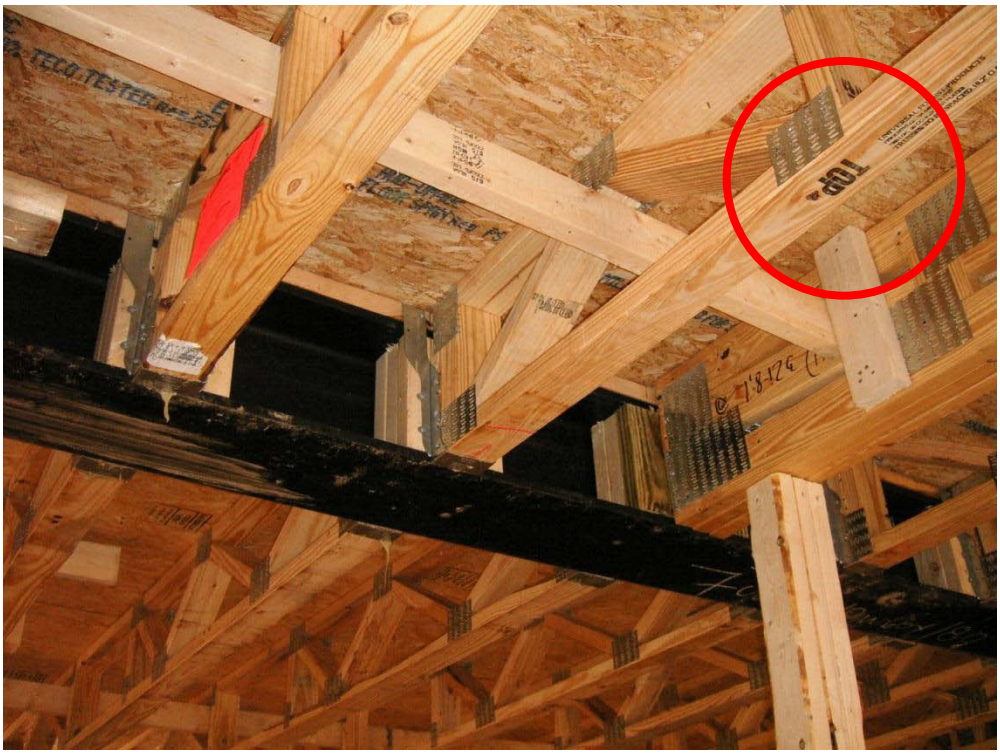

Figure 4 – 24: Floor truss installed upside down. Note that the strongback cannot be properly attached to the upside down truss because the webs do not align.

4.7.2.8 Truss Attachments.

Trusses must be properly attached to beams and/or top plates of the supporting walls. Proper attachment insures the trusses are in proper alignment, and protects the roof system from uplift forces. Positive attachment is often achieved using connector hardware as shown in Figure 4 - 25.

Figure 4 – 25: Detail of an installation of tie-down hardware. However, the bottom of the truss chord is split, providing a compromised bearing condition.

Figure 4 – 26: Improper attachment of roof truss bottom chord. The top of the partition wall to which the truss is connected is barely visible due to insulation coverage.

The inspector should examine the bottom chords of trusses crossing the top plates of interior partition walls. The trusses should not be firmly attached to the partition walls. Doing so may divert load through the truss in a manner it was not designed to support. Figure 4 – 26 depicts a close-up of a truss bottom chord that was bolted to an interior partition wall. Another problem with Figure 4 - 26 is the hole drilled through the bottom chord, reducing its cross section.

4.7.2.9 Construction Loads.

Onsite storage of construction materials such as sheathing, shingles, and drywall present a potential problem for EWPs. Construction materials must be carefully stored within the framing structure and not overload any particular member. At the pre-drywall stage of inspection, the most common material to be stored is drywall. Inspectors should look beneath these materials to inspect for damage. Figure 4 – 27 illustrates improper construction loading on a MPCWT floor system. Figure 4 – 28 shows improper storage of shingles on a roof truss system.

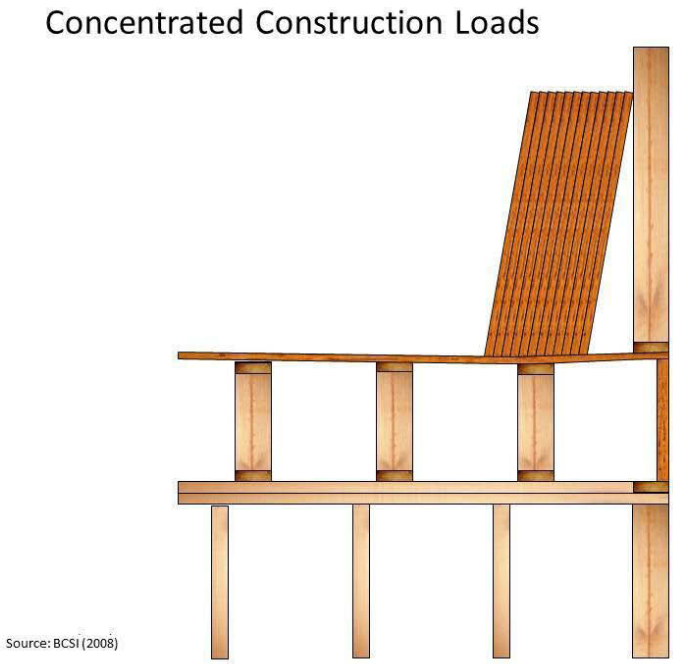

Figure 4 – 27: Concentrated construction load on a floor truss. Used under fair use guidelines, 2011.

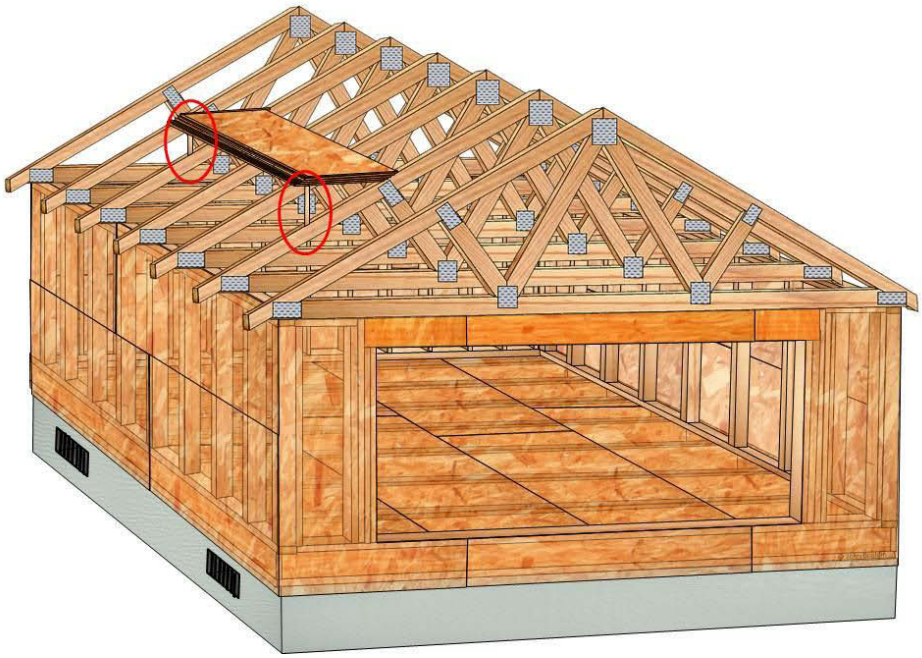

Figure 4 – 28: Concentrated construction load on two roof trusses.

4.7.2.10 Handling and Storage.

Metal plate connected wood trusses should be stored on a flat, level surface elevated above the ground, banded together, and wrapped to prevent exposure to excessive moisture (ANSI/TPI, 2007; BCSI, 2008). Improper storage can result in out-of-plane loading that the trusses were not designed for. Possible consequences include loosened gusset plates and damaged chords and webs (Figure 4 – 29).

Figure 4 – 29: Improper support beneath stored trusses.

The inspector may not be able to see improper handling of trusses directly, because they are usually installed before the pre-drywall inspection. However, looking around the jobsite may provide clues about the general care with which the builder treats

building materials. Figures 4 – 30 and 4 – 31 show examples of poor handling procedures, and the consequent damage.

Figure 4 – 30: Improper floor truss handling and storage.

Figure 4 – 31: Improper roof truss handling and storage.

4.7.3 I-Joists.

Sources: Manufacturer literature and survey questions 2 and 3.

Wooden I-joists are engineered wood products (EWP) that offer improved dimensional stability and in many case the ability to span longer distances than solid sawn lumber. The cross section of an I-joist resembles the capital letter 'I', and they are comprised of two major components - flanges and webbing. Flanges are parallel members at top and bottom of the I-joist running the entire length. They are generally made from solid sawn lumber or laminated veneer lumber (LVL), although other engineered materials may be used. Flanges are grooved to accept the webbing (the vertical structural panel such as plywood or oriented strand board (OSB), which is glued

into the flange grooves. In order to perform properly, the flanges may not be cut or notched, and any holes in the webbing must be made in conformance with the manufacturer's specifications.

I-joists depend on the integrity of the webs, flanges, and glue joints for proper performance. In the case of I-joist rafters, damaged flanges and webs are high-risk areas for non-compliance, and deserve special attention. Damaged webs and flanges are prescriptively non-compliant and therefore code violations, and require manufacturer or RDP evaluation. Figure 4 – 32 Illustrates a cut doubled I-joist beam.

Figure 4 – 32: Damaged I-joist cantilevered girder.

I-joist webs are designed to allow certain holes to be cut through them, as long as the hole size and location conform to the individual manufacturer"s specifications. As a rule,

the larger the hole, the farther it must be from the inside of the face of the supporting member. The hole charts provided in the brand-specific appendix sections are based on a uniformly loaded condition. If a concentrated load is placed on top of the I-joist, it requires special engineering. However, a rule of thumb is that holes must keep the same distance from these load bearing points as from the reactions. The Appendices also show I-joist span tables, where available.

4.7.3.1 Webs.

Holes in I-joist webs present a big challenge to builders and inspectors alike. The surveyed experts recommend that every hole in every I-joist web be inspected. There are different allowable hole specifications between manufacturers, and there is no consistent manner in which these distances are specified. For example, some manufacturers use the distance from a bearing face to the center of the hole, while others measure the distance from the closest bearing face to the closest edge of the hole. In addition, there are different specifications for the sizes and locations of rectangular holes than for round holes.

Many manufacturers provide 1½ inch diameter pre-punched „knockouts" at intervals along the length of the I-joist. Locations of pre-punched holes are generally allowed anywhere in an I-joist without regard to the published tables. These are not considered holes for structural purposes, and are useful for running wires and small pipes through the I-joist webs. The experts suggest carefully inspecting each knockout. Although knockouts are designed for removal by a well-aimed hammer blow, improper hammering may cause an enlargement and/or irregular shape to the hole. These

damaged holes are no longer pre-punched and fall under the prescriptive hole tables specified in the manufacturer"s literature. Similarly, if 1½ inch holes are field bored into the I-joist webs, the holes must conform to prescriptive hole tables specified in the manufacturer"s literature. Placement of multiple holes is governed by manufacturer specifications. All of the manufacturer literature reviewed for this project requires a minimum distance of twice the diameter of the largest hole between the two holes or twice the distance of the longest edge between rectangular holes.

Span and hole tables are based on the assumption that the I-joist is uniformly loaded and simply supported. If this assumption does not hold true for a given condition, only the manufacturer or an RDP can determine hole distances from the loaded points. However, one IR said that a rule of thumb is that the distance of holes from a concentrated load point is at least the distance from a bearing reaction as specified for a uniformly loaded I-joist.

4.7.3.2 Flanges.

I-joist flanges may not be cut, notched, drilled, spliced, or otherwise altered in any way. The experts recommend looking at the top and bottom flanges on both sides, inspect the flanges at all connector hardware connections for splits and toenails, and to look for the construction adhesive that must be present (per subfloor manufacturer requirements) between the top of the upper flange and the underside of the subflooring. Toenails should not be used to support I-joists before installing connector hardware. The metal-to-metal contact can cause floor squeaks and cause the connector flanges to splay.

4.7.3.3 Blocking.

I-joists require various types of blocking depending on the nature of the load conditions. Types of blocking include:

1. Filler blocking for use between I-joist girders (Figures 4 – 33 and 4 - 34).
2. Web stiffeners for use at some connector connections and I-joist bearing areas (Figure 4 – 34).
3. Squash blocks must be $\frac{1}{16}$ inch taller than the I-joists to allow vertical loads to pass around the I-joists rather than through the webs (Figures 4 – 35 and 4 – 36), and must be installed before the subflooring (Figure 4 – 37).
4. Panel blocking which may be used for the same purposes as squash blocking, but offers enhanced resistance to lateral forces (Figures 4 – 38 and 4 – 39).
5. Backer blocking serves to enhance the support of certain connector connections and to protect the flanges from excessive loading.

Each manufacturer of engineered wood products and connector hardware specifies the use of blocking types for their products. In many cases, blocking specifications are similar between the different manufacturers.

Placement of backer blocking is dependent on whether face mount connectors or top mount connectors are used for the connection. Connector hardware is discussed further in section 4.9. The proper connection of a single I-joist to an I-joist girder using a top mount connector is shown in Figure 4 – 33. Figure 4 – 34 shows a connection using a face mount connector. One difference between the two connector installation methods is the placement of the backer blocking behind the connector on the I-joist

girder. For the top mount connector, the backer block must be installed tight to the underside of the top flange. For the face mount connector, the filler blocking is installed tight to the top of the bottom flange. This backer blocking may not touch both top and bottom flanges simultaneously. A gap is required at either the top of the bottom depending on the connector types.

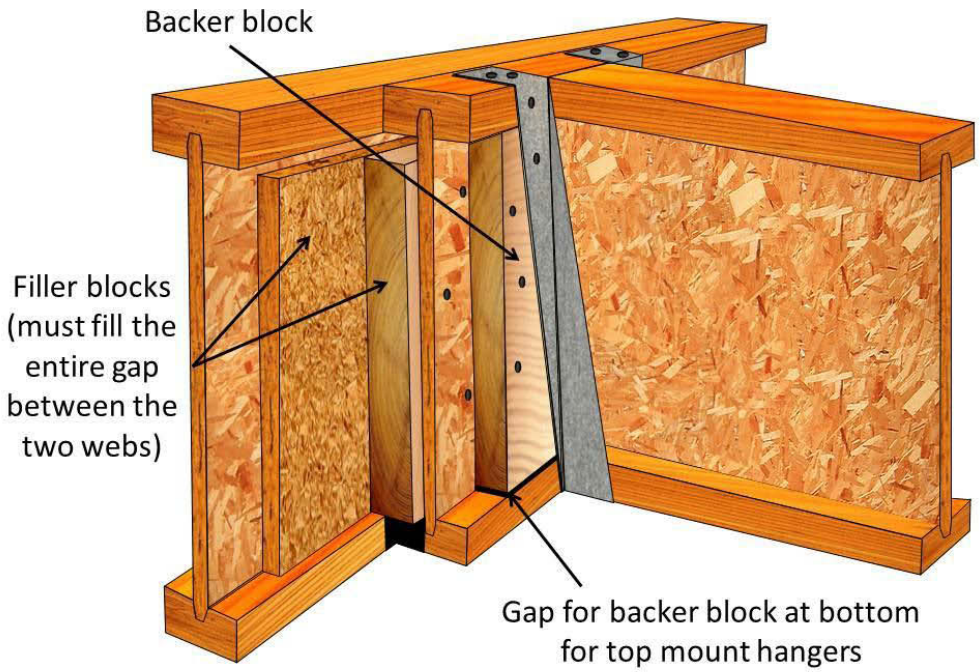

Figure 4 – 33: Proper face mount installation. Single I-joist-to-beam illustrated here.

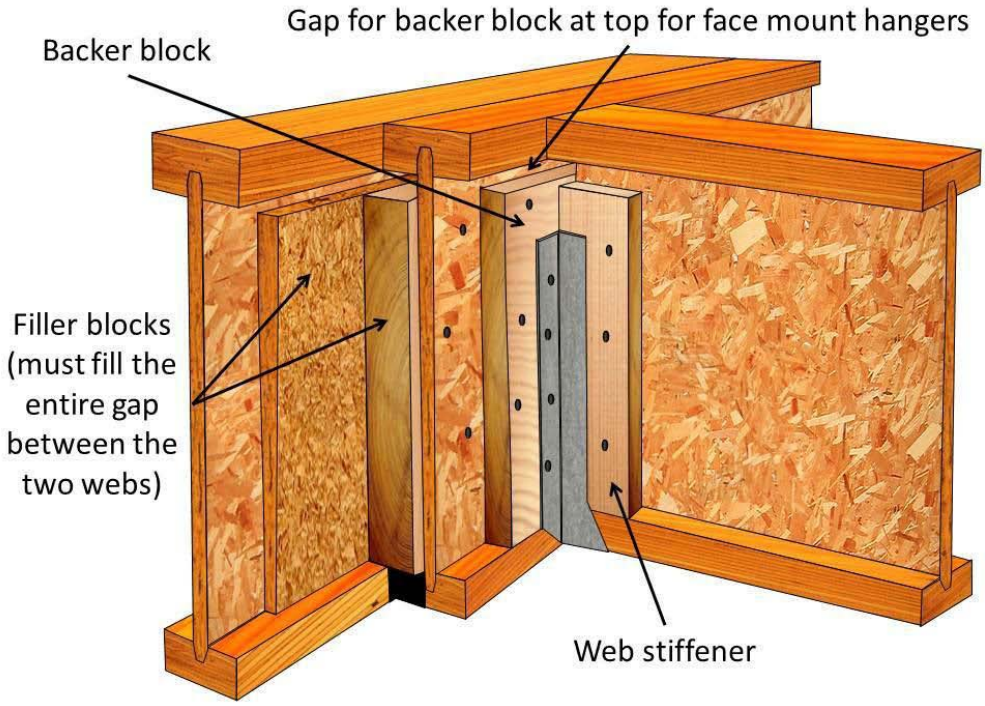

Figure 4 – 34: Web stiffeners used with connector hardware.

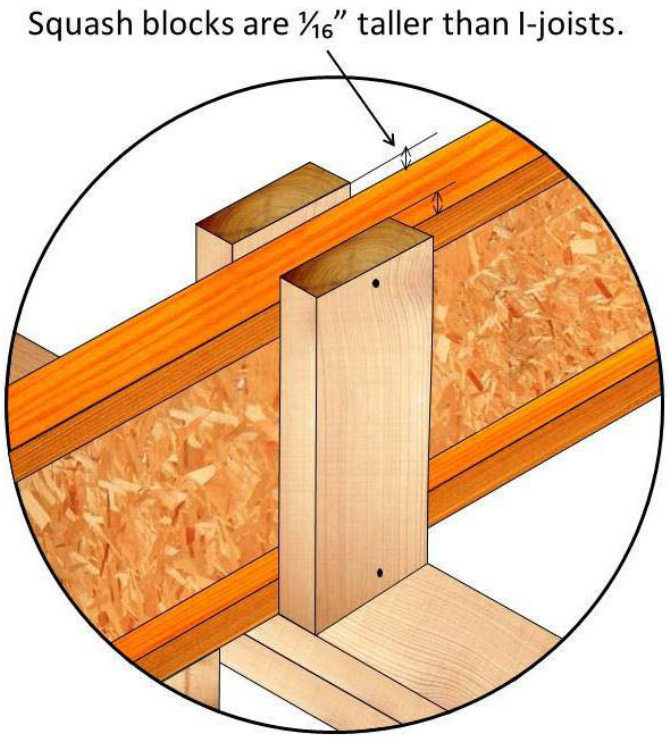

Figure 4 – 35: Squash blocking height detail.

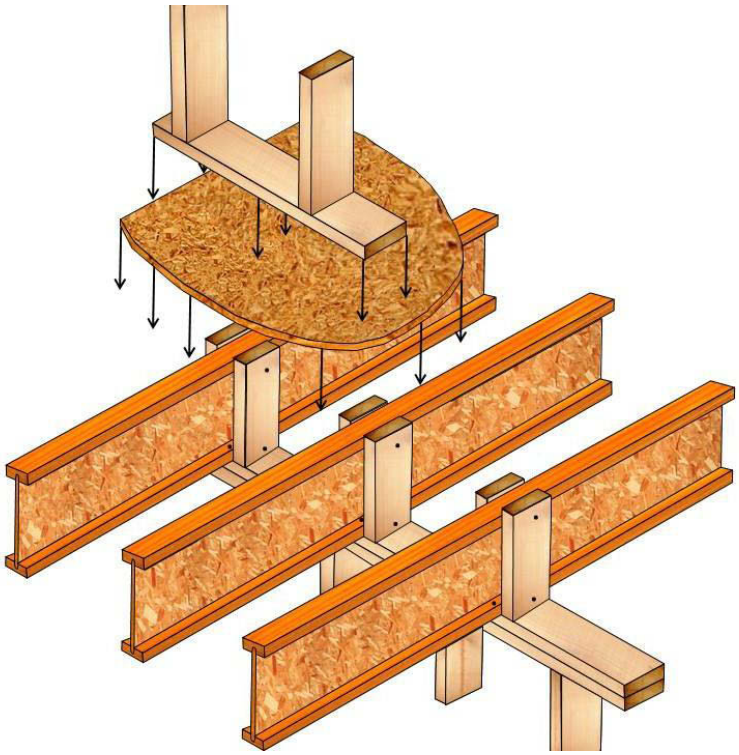

Figure 4 – 36 Squash blocking beneath a perpendicular bearing wall.

Figure 4 – 37: Squash blocking height detail installed.

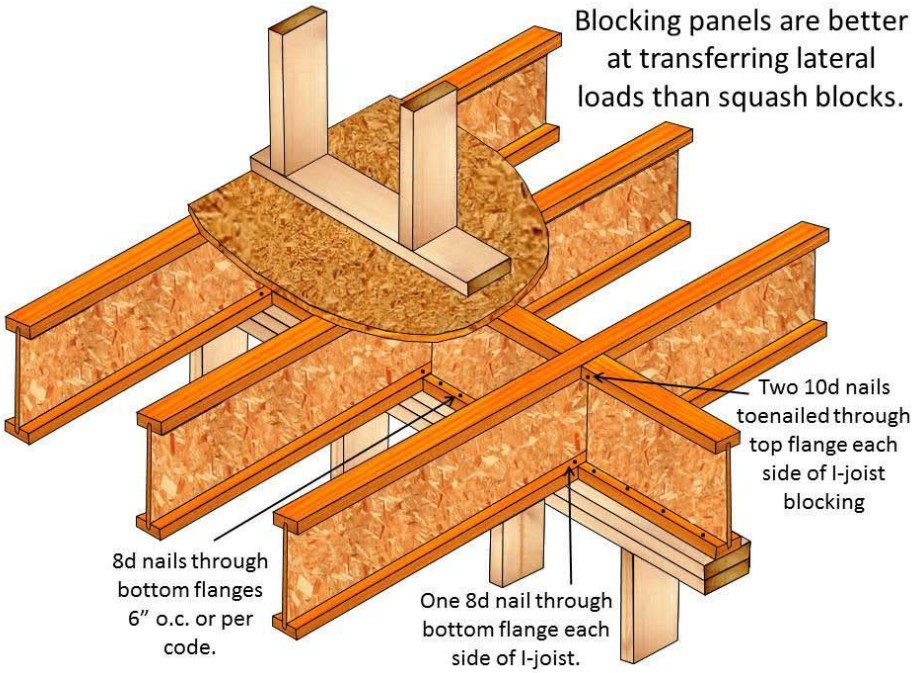

Figure 4 – 38: I-joist blocking beneath a perpendicular bearing wall.

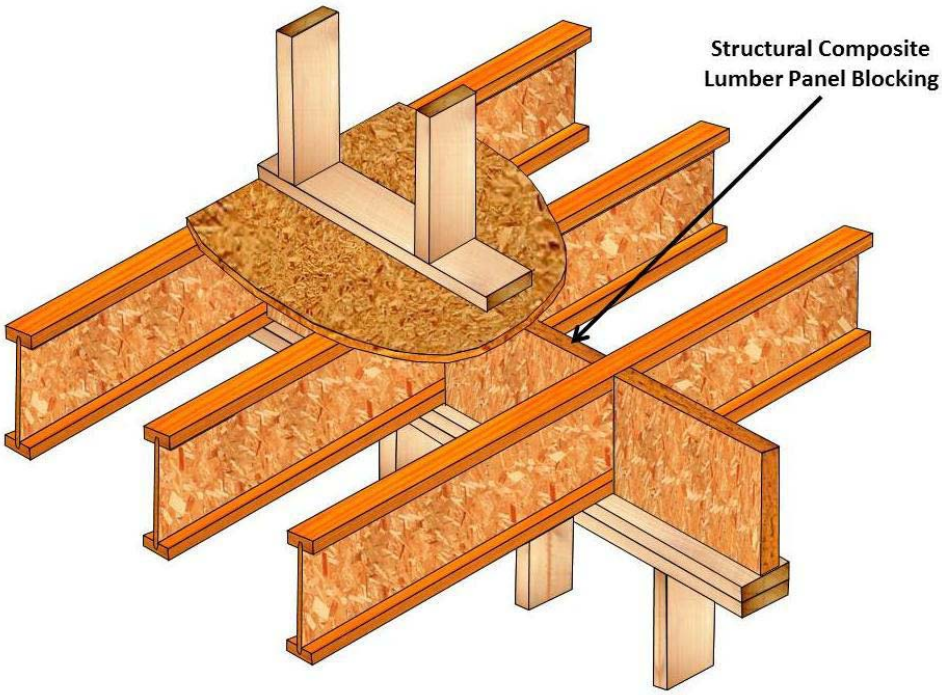

Figure 4 – 39: Panel blocking beneath a perpendicular bearing wall.

4.7.3.4 Bracing.

Bracing is generally required on the compression edge of an EWP, and I-joists are usually braced by the connection between the subfloor and the compression edge (usually the top flange) of the I-joist. In some cases, a designer may specify bracing at intermediate points, but usually the inspector will not know when or where such bracing is required. However, if bracing is present, it should be installed diagonally (unless panel bracing is used) to prevent lateral rotation of the joists by connecting the top flange of one joist to the bottom flange of the adjoining one.

Steel strapping is often used for this for bracing and is effective only in tension, not compression. Steel strapping must be fastened to the top of the top flange on one member, and the bottom of the bottom flange on the adjacent joist. This attachment must be made before the subfloor is installed to allow fastening to the top of the top flange. Figure 4 – 40 shows steel bracing straps nailed to the inside faces of the I-joists. These straps are subject to fastener withdrawal when loaded in tension, and will collapse when loaded in compression. Diagonal bracing may also be constructed of sawn lumber and is usually available in prefabricated units such as those depicted in Figure 4 – 41. Panel bracing consists of sawn lumber or SCL boards installed between the adjacent I-joists. Each brace is staggered so that the braces can be nailed into place.

Figure 4 – 40: Steel strap cross bracing incorrectly installed.

Figure 4 – 41: Prefabricated lumber cross bracing.

4.7.3.5 Bearing.

I-joists must fully bear on an adequate bearing member such as a beam or a sill plate. Figure 4 – 42 shows an I-joist resting on a wedge rather than on a flat surface. Most I-joist manufacturers require a minimum bearing length of 1¾ inches at I-joist ends that bear on a wooden member (Figure 43) (at least one manufacturer allows only 1½ inches of bearing), and 3 inches at ends that bear on concrete. I-joists are not treated to resist moisture wicking, and must therefore be protected from direct contact with concrete. Intermediate bearing areas require 3½ inches of bearing surface for all brands. The surveyed experts recommend that the inspector focus special attention on intermediate bearing walls. Blocking is required for continuous I-joists that bear at these points (Figure 4 – 42).

Figure 4 – 42: Unbalanced bearing support - I-joist rests on wedge.

Figure 4 – 43: Insufficient bearing surface.

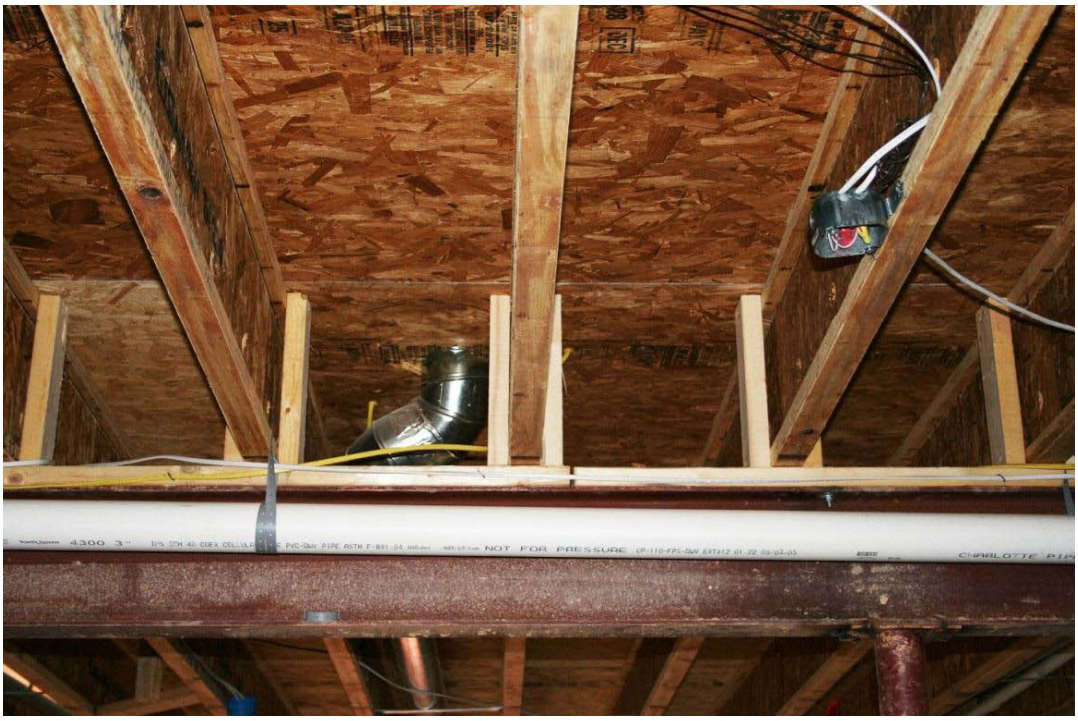

Figure 4 – 44: Squash blocking should divert load around the I-joists.

4.7.3.6 Fasteners.

I-joists must be attached to sill plates, beams, and connector hardware according to the manufacturer"s specifications. These requirements specify the nail diameter and length, and the spacing between fasteners. Experts recommend that the inspector check each connection for correct fasteners. The use of a nail gauge may help the inspector determine nail dimensions where nails are accessible.

4.7.3.7 I-Joist Girders.

When two I-joists are paired up to form a single structural unit (referred to as a beam or girder), continuous filler blocking must contact the inside surfaces of each I-joist web (Figure 4 – 45).

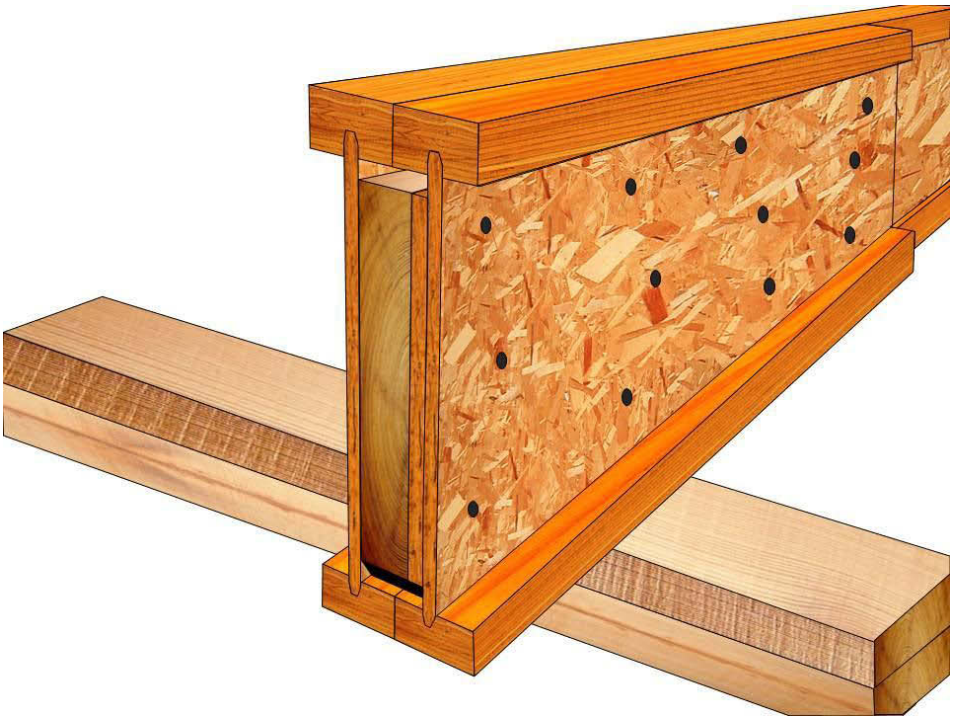

Figure 4 – 45: Filler blocking showing fasteners.

Proper blocking requires both a nominal 2” sawn lumber component and a ½ inch thick piece of sawn lumber or structural panels to completely fill the void (Figure 4 – 46). Fastener types and patterns for I-Joist girders are found in the brand-specific Appendices.

Use Proper Width of Filler Blocking Between Doubled I-Joist Beams

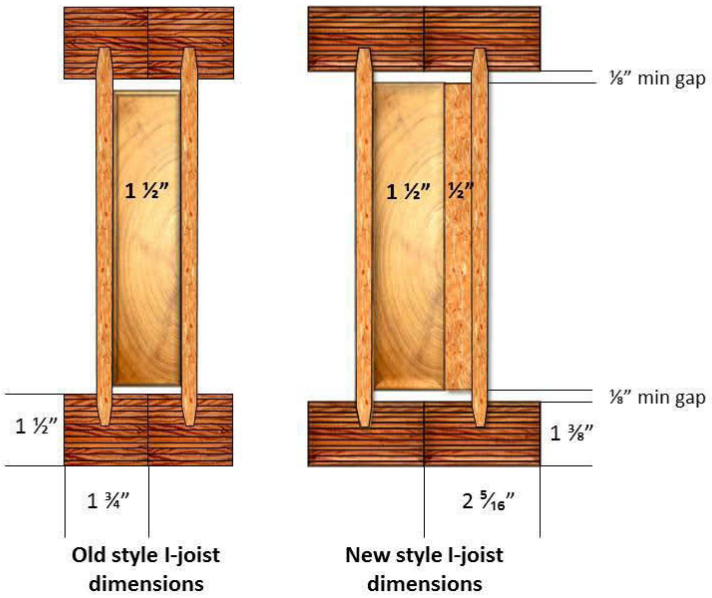

Figure 4 – 46: Proper width of filler blocking. The figure on the left shows dimensions and filler blocking requirements for one style of I-joists, and the right figure shows dimensions and filler requirements for another. Each has different specifications for filler blocking.

The SMEs identified doubled I-joist girders as being at high risk for problems when perpendicular joist members are attached to the side of the I-joist girder. If a doubled I-joist beam is not properly attached, the member to which the perpendicular joists are attached may bear a disproportionate load, leading to excessive deflection. If the end of

a double I-joist girder is visible, the ends should be checked for the presence of proper filler blocking. In cases where filler blocking is not apparent, one expert recommends using a feeler gauge inserted between the two I-joists to inspect for the presence of filler blocking.

Figure 4 – 46 illustrates a potential cause of filler blocking problems. Dimensions of the typical I-joists have changed, resulting in the need for additional filler blocking between webs. Installers who are used to the old method may not realize that the extra ½ inch blocking panel is required. (Note: some I-joists have 3½ inch or wider flanges, which require different filler blocking than for those illustrated.)

4.7.3.8 Sloped End Cuts.

I-joist manufacturers allow certain sloped end cuts. The end cut may not extend beyond the inside face of the bearing member (Figure 4 – 47 and Figure 48). In cases where I-joists bear in pockets in a masonry wall, the sloped end cuts are referred to as „fire cuts", and the same rule applies.

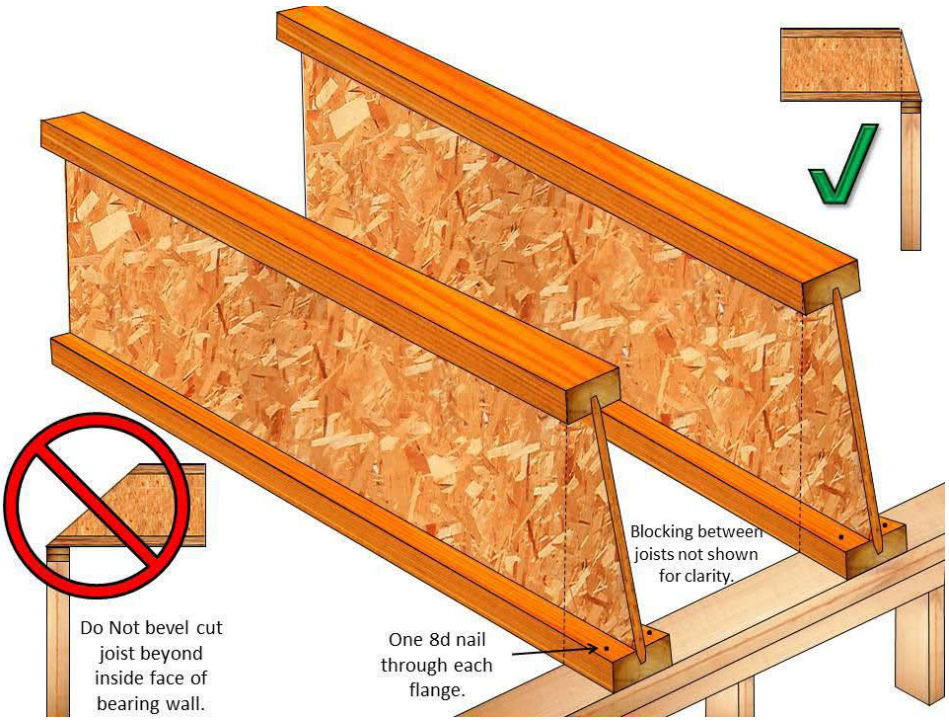

Figure 4 – 47: Typical allowable I-joist sloped end cut.

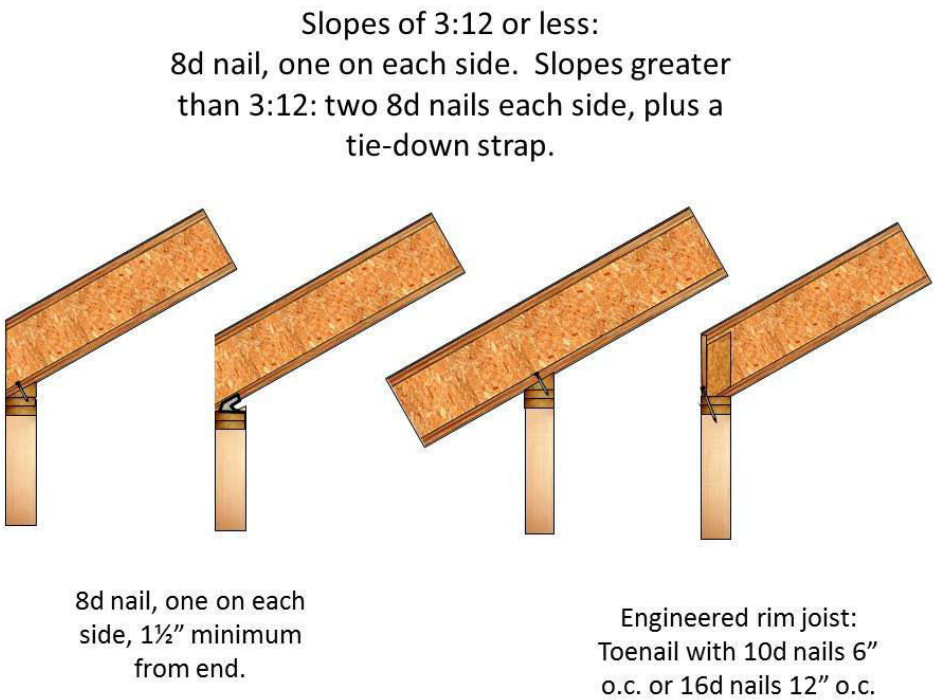

Figure 4 – 48: Allowable I-joist rafter sloped cuts.

4.7.3.9 Construction Loads.

As previously discussed, onsite storage of construction materials such as sheathing, shingles, and drywall present a potential problem for EWP structural members. These materials must be carefully stored within the framing structure to prevent overloading any particular member. At the pre-drywall stage of inspection, the most common material to be stored indoors is drywall. It is very important for the inspector to look beneath these materials to inspect for damage. Figure 4 – 49 illustrates the potential effects of excessive loading on an I-joist.

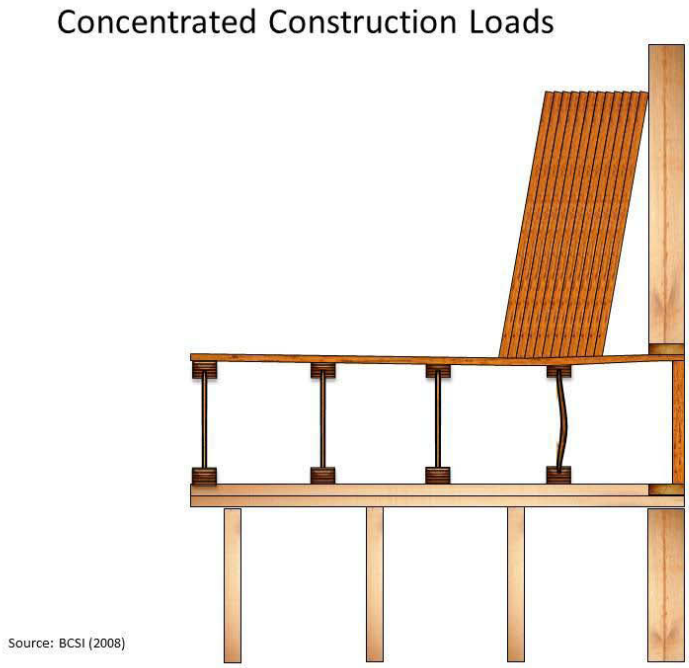

Figure 4 – 49: Potential effect of a concentrated load on an I-joist .
Used under fair use guidelines, 2011.

4.7.3.10 Handling and Storage.

Handling of I-joists requires care to avoid damage. Before installation, I-joists must be stored on a flat, level surface raised above the ground, and wrapped to prevent exposure to excessive moisture. I-joists must be stored so that the webs are vertical (Figure 4 – 50). Figure 4 – 51 depicts a lift carrying I-joists in a horizontal orientation,

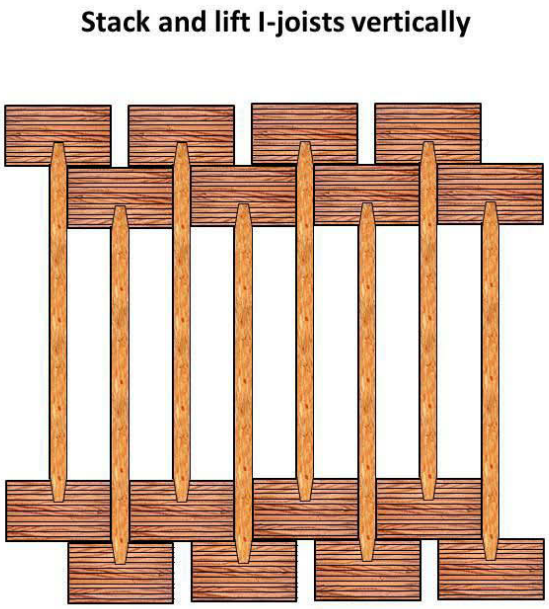

Figure 4 – 50: I-joists oriented with the webs vertical.

causing the top three I-joists to break. During a pre-drywall inspection, the inspector may not see the handling errors as they occur, but by becoming familiar with the types of damage caused by poor handling, the inspector can have an advantage in detecting damage.

Figure 4 – 51: Broken I-joists due to improper handling and lifting.

4.7.4 Structural Composite Lumber Beams and Columns.

Sources: Manufacturer literature and survey questions 5 and 6.

Laminated veneer lumber and parallel strand lumber both fall in the category of structural composite lumber (SCL). These versatile materials can be used as both beams and columns. LVLs and PSLs are proprietary products and proper installations must meet the manufacturer specifications as provided in the brand-specific Appendices.

Structural composite lumber beams and columns are at risk for a number of problems including cupping (Figure 4 - 52), notches, bearing, fasteners, concentrated load points, multi ply member fastening, out-of-plumb and out-of-level, angled cuts, holes, improper

connections between stacked columns, point load blocking, missing columns, improper support, and non-pressure treated wood columns embedded in concrete. The SMEs offered no specific techniques for inspecting beams and columns, though the generalized techniques still apply. Figures 4 - 53 through 4 – 61 illustrate examples of some proper and improper SCL beam and column installation issues.

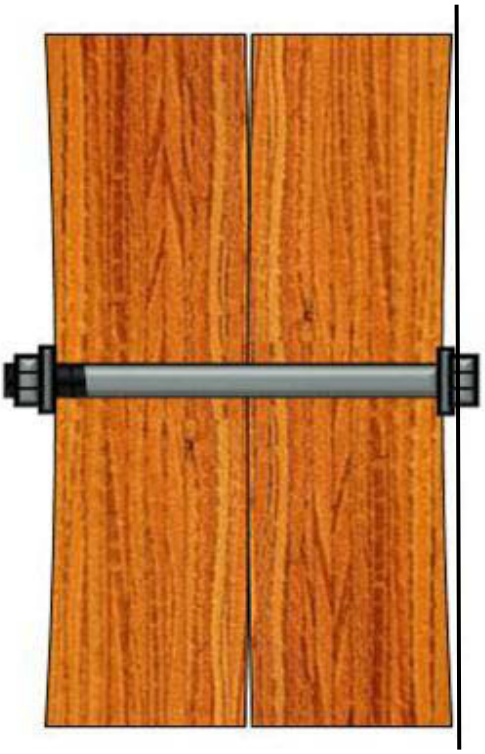

Figure 4 – 52: Cupped and splayed beams.

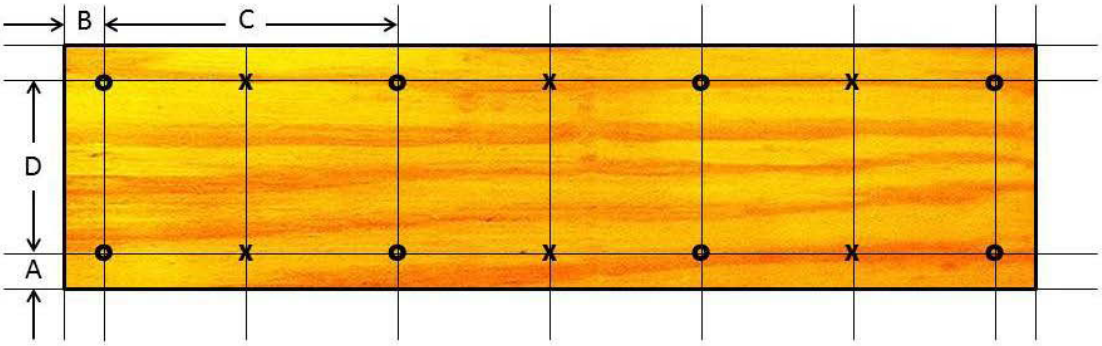

Figure 4 – 53: Example of a fastening pattern for a multi-ply girder. The small o"s show where fasteners are driven from this side, the x"s show the staggered patterns when fasteners are driven from the other side.

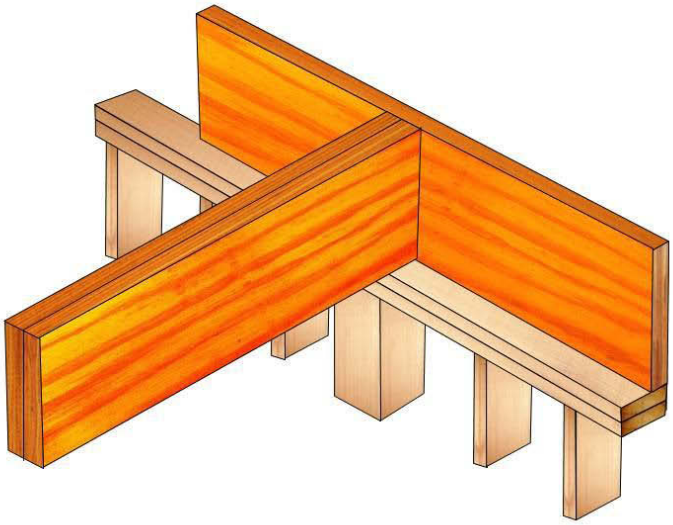

Figure 4 – 54: Properly supported concentrated load under a beam .

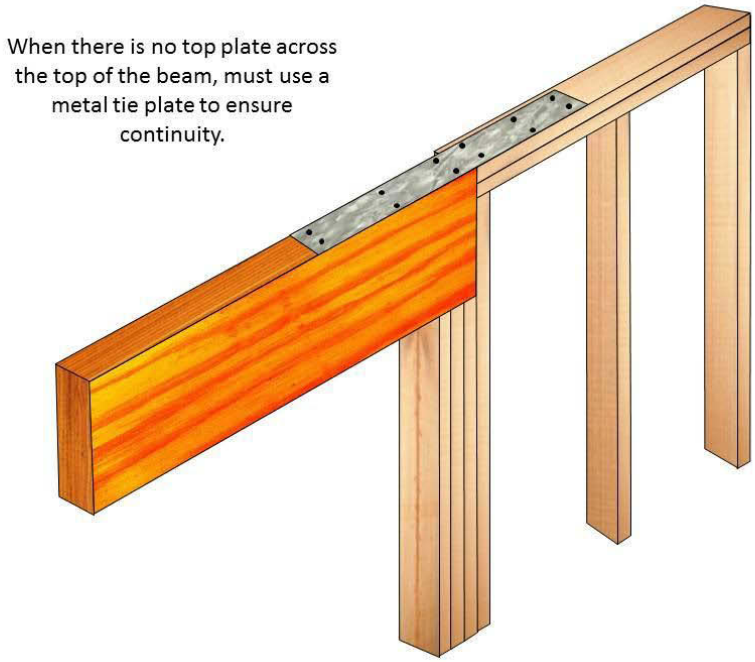

Figure 4 – 55: Beam top strap at double top plate.

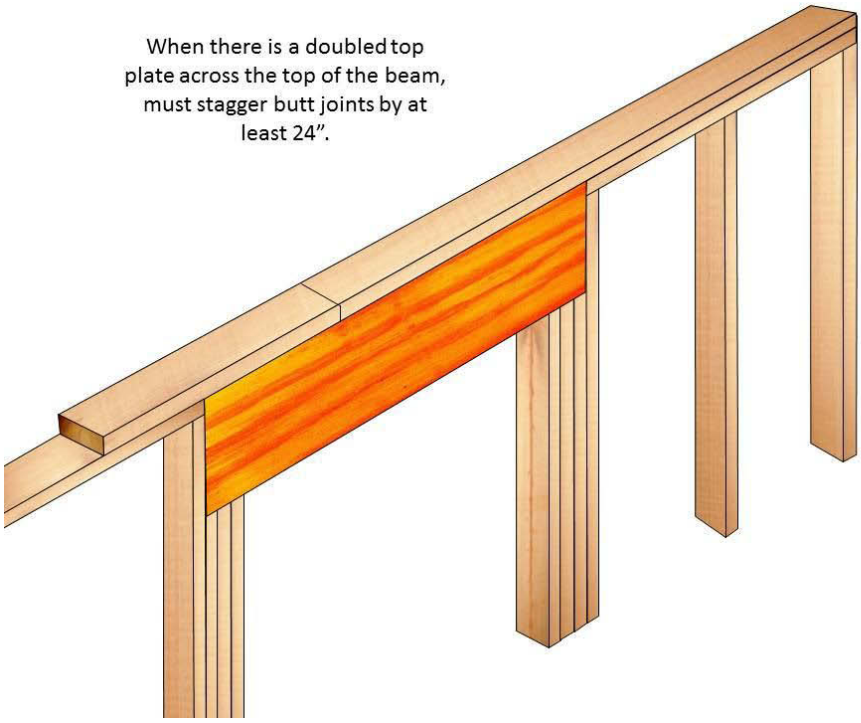

Figure 4 – 56: Double top plates must provide continuity over a beam. Butt joints must be staggered by at least 24 inches apart.

Figure 4 – 57: Insufficient beam bearing surface.

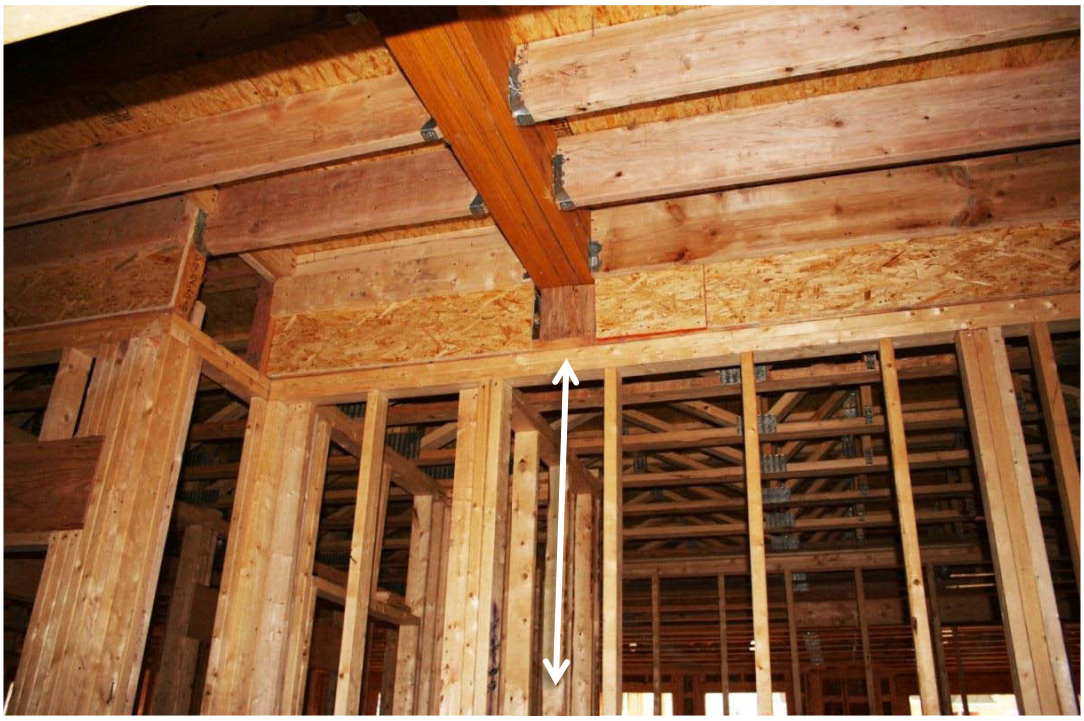

Figure 4 – 58: Missing column under beam.

Figure 4 – 59: Offset columns – discontinuous load path.

Figure 4 – 60: No footer beneath a bearing column.

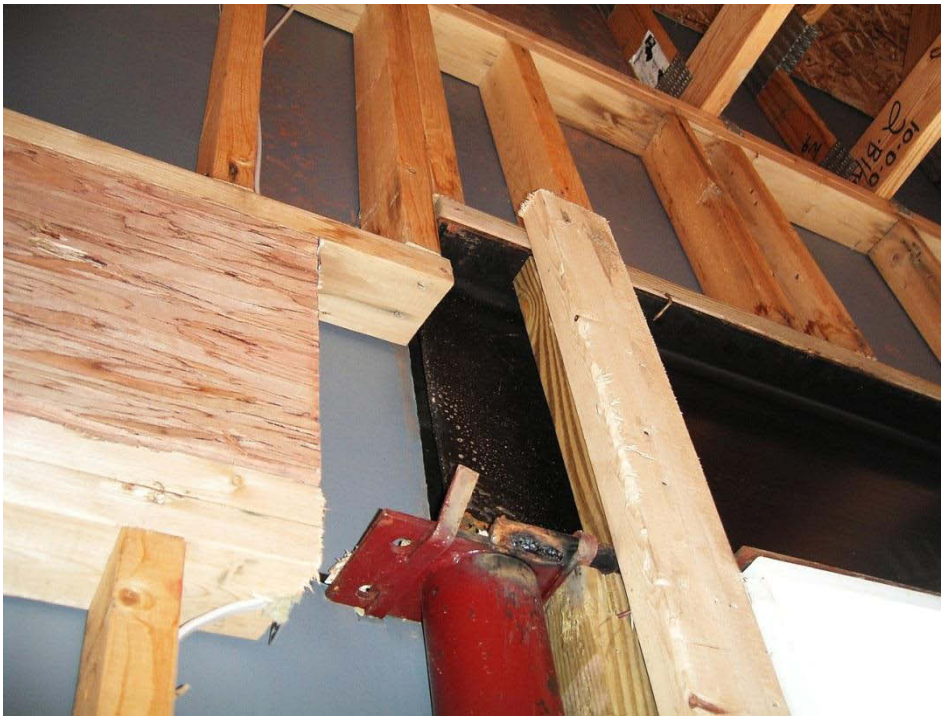

Figure 4 – 61: Beam cut away at bearing surface.

4.7.5 Rim Joists.

Sources: Manufacturer literature and survey questions 9 and 10.

Rim joists depend on proper bearing on sill plates or other bearing members, and sill plates depend on direct bearing support to transmit vertical and lateral loads to the foundation, and to allow attachment of the floor joists and the subfloor. Experts recommend that the inspector traverse both the interior and exterior perimeter of the house to inspect the rimjoists. The brand-specific Appendices provide details on rim joist installation requirements.

Issues to inspect for include:

1. Floor joists that lack proper headers over foundation openings

2. Rim joist butt joints above foundation openings
3. The use of two rim joist members horizontally stacked
4. Holes through rim headers over foundation openings
5. Unsupported point loads.

4.7.5.1 Bearing.

The SMEs recommend inspecting the rim joists to insure full bearing. Figures 4 – 62 and 4 – 63 illustrate the framing overhanging the foundation walls. Rim joists that overhang the foundation wall may interrupt the load path. This is often easier to observe from the outside, rather than the inside of the house. All cases of rim joists overhanging the foundation walls should be evaluated by an RDP. Figure 4 – 64 shows a correct rim joist installation, and Figure 4 - 65 shows the correct installation of point load blocking at the rim joist.

Figure 4 – 62: Rim joist overhangs the foundation wall.

Figure 4 – 63: Rim joist overhangs the garage foundation wall.

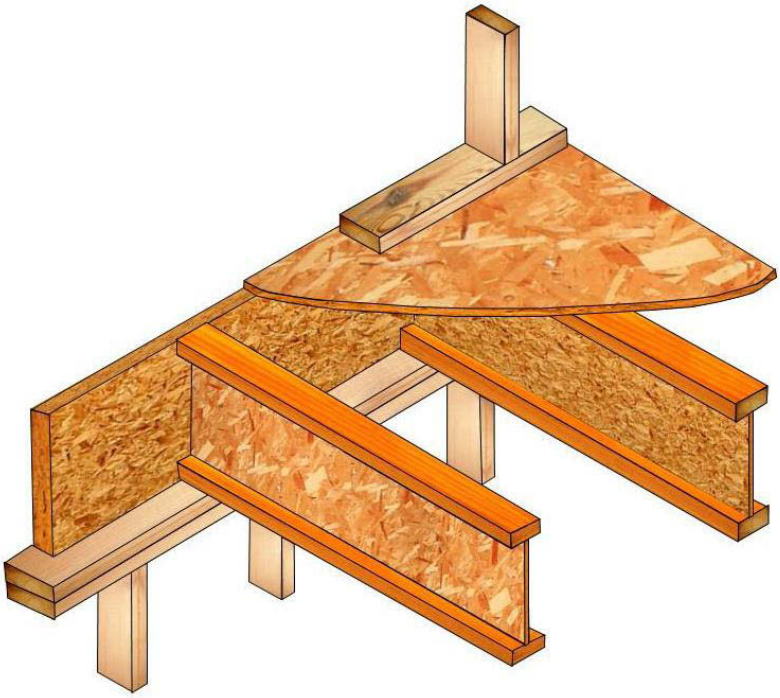

Figure 4 – 64: Typical detail of I-joist system with engineered rim joist.

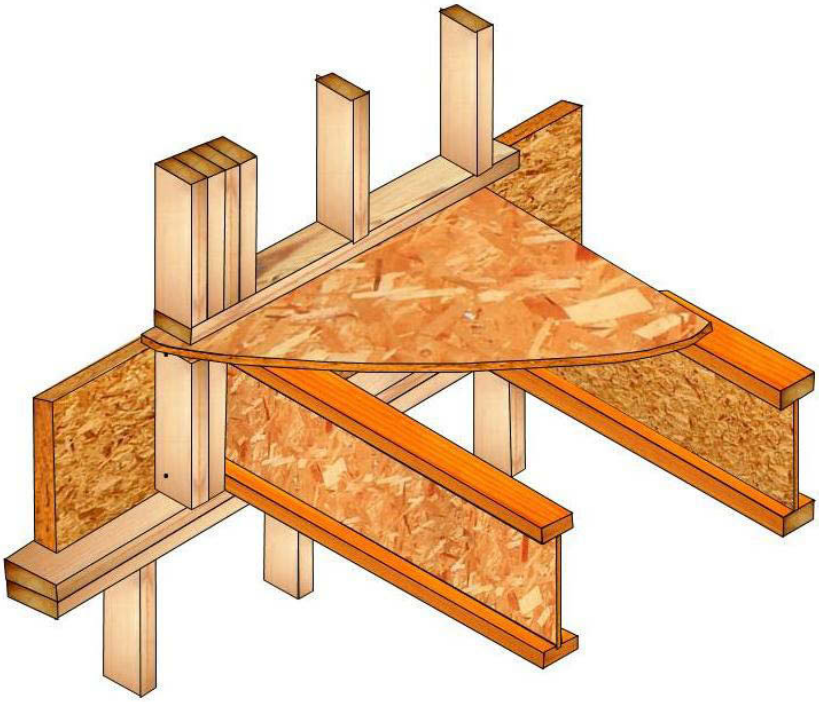

Figure 4 – 65: Typical detail of an I-joist system with point load.

4.7.5.2 Improper Rim Joist Materials.

I-joist floor systems require that the rim joist material be engineered for this purpose, and have the same height as the I-joists. According to the SMEs and APA specifications (APA, 2009), no other materials may be used for this purpose. Inappropriate materials include OSB sheathing, subflooring, and sawn lumber. OSB may not be adequate to support the design loads, and is not thick enough to provide adequate support. Installation of non-approved rim joist materials requires cutting to size. When cut, the rim joist may be shorter than the I-joists (Figure 4 – 66). Rim joist material that is too short can change how structural loads are transmitted to the foundation. Sawn lumber is also not allowed with I-joist floor systems, because sawn lumber shrinks and swells more than I-joists do. Figures 4 – 67 and 4 – 68 show potential effects of drying-induced shrinkage on solid sawn lumber rim joists.

Figure 4 – 66: Wrong rim joist material--cut too short.

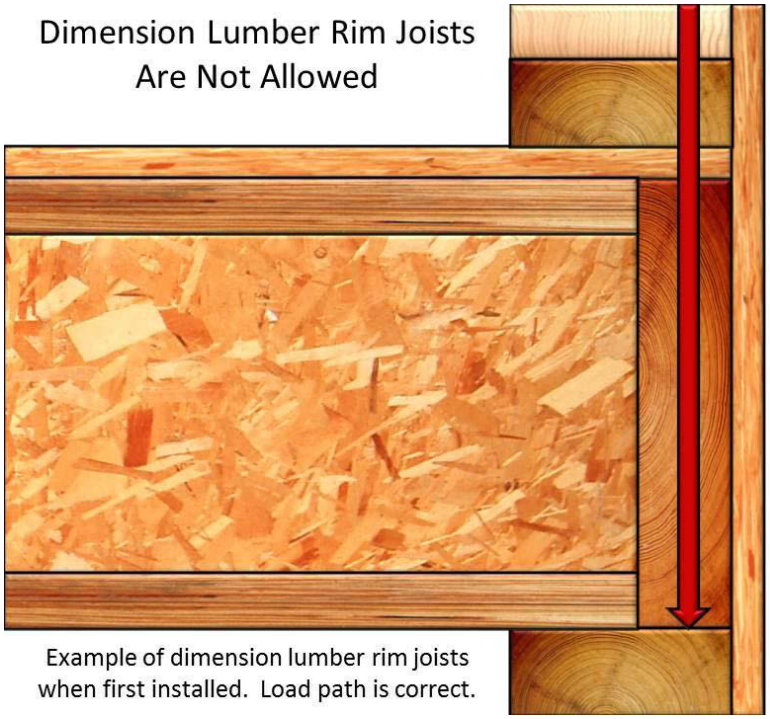

Figure 4 – 67: Sawn lumber rim joist before wood shrinkage.

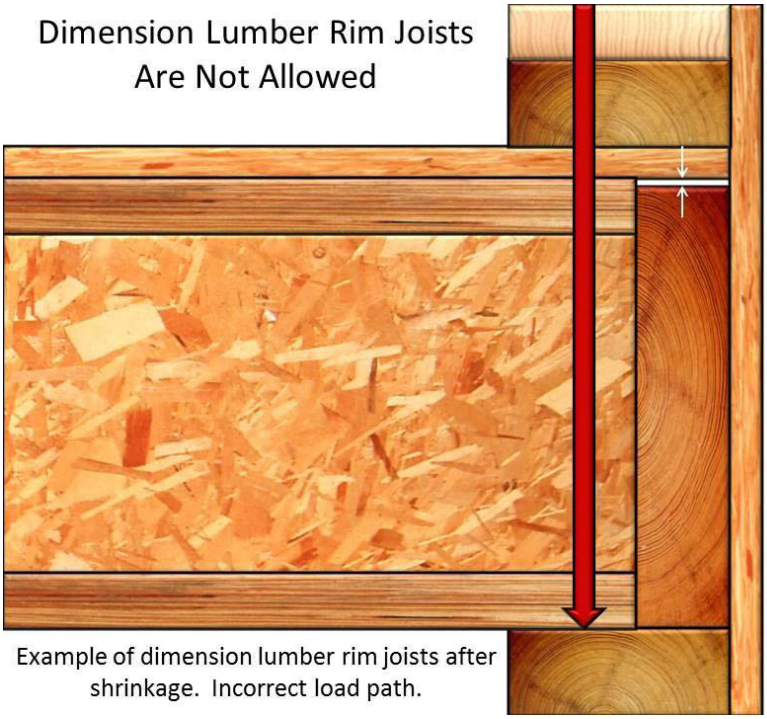

Figure 4 – 68: I-joist floor after sawn lumber rim joist shrinkage.

4.7.5.3 Rim Joist Holes.

Using the APA specifications for rim joists (APA, 2004), holes greater than 1½ inches are not allowed in rim joists over unsupported window and door openings. Holes that conform to APA standards may be bored over the unsupported opening when positioned at mid-depth and in the middle ⅓ of the span. For openings of four feet or greater, the rim joist must be designed by an RDP. Figure 4 – 69 illustrates an oversized hole where the rim joist spans the opening. Figure 4 – 70 gives the allowable hole sizes for a fully supported rim joist. Figure 4 – 71 shows allowable hole sizes in rim joists.

Source: APA (2004)

Figure 4 – 69: Hole specifications for rim joists over foundation openings. Used under fair use guidelines, 2011.

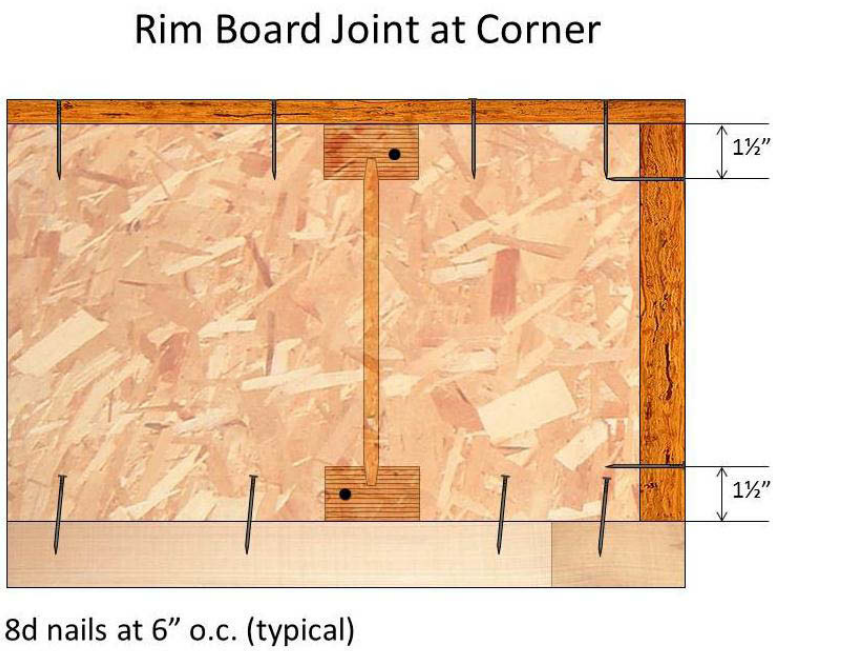

Figure 4 – 70: Fastening details for rim joist corner. Used under fair use guidelines, 2011.

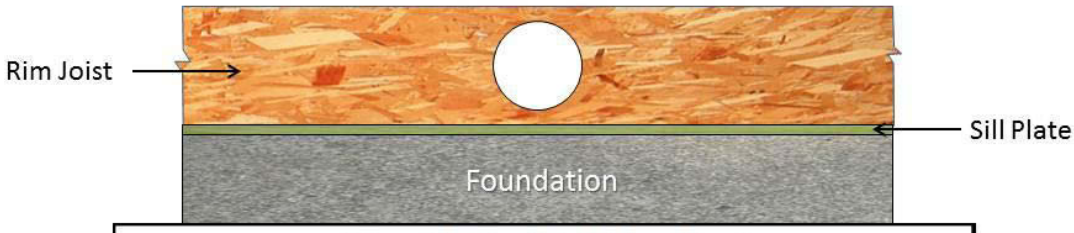

Allowable Rim Joist Holes Sizes*		
Rim Joist Depth (inches)	Maximum Allowable Hole Size (inches)*	Minimum Rim Joist Length (inches)** for the maximum allowable hole size
9½	6¼	50
11⅞	7¾	62
14	9¼	74
16	10½	84
Hole sizes do not apply to a rim joist over an unsupported opening.		
Assumes a fully supported rim joist		
*Diameter of a round hole or the longer dimension of a rectangular hole.		
The length of the rim joist per wall line.		
**For multiple holes, the min rim joist length shall be 8 times the sum of all holes.		
Source: APA (2004)		

Source: APA (2004)

Figure 4 – 71: APA allowable hole sizes and locations for rim joists. Used under fair use guidelines, 2011.

4.7.5.4 Rim Joist Fastener Details.

Proprietary rim joists require installation in accordance with the manufacturer's literature. In most cases, these instructions are the same as the APA specifications (APA, 2009). Nailing details are shown in Figures 4 – 72 and 4 – 73.

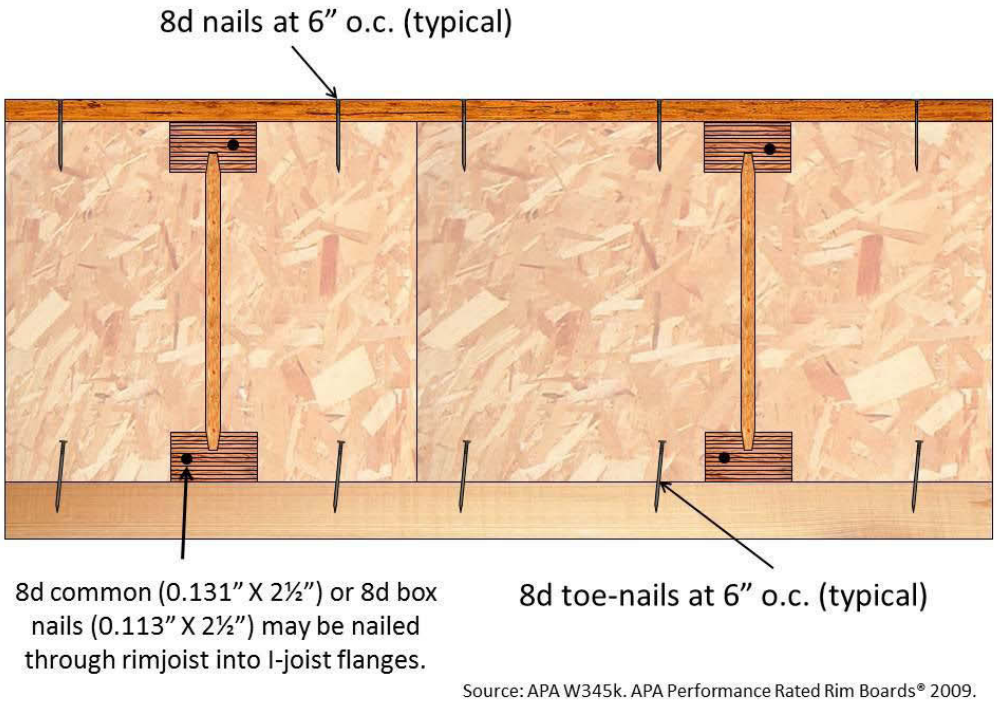

Figure 4 – 72: Rim joist subfloor and sill plate nailing. Used under fair use guidelines, 2011.

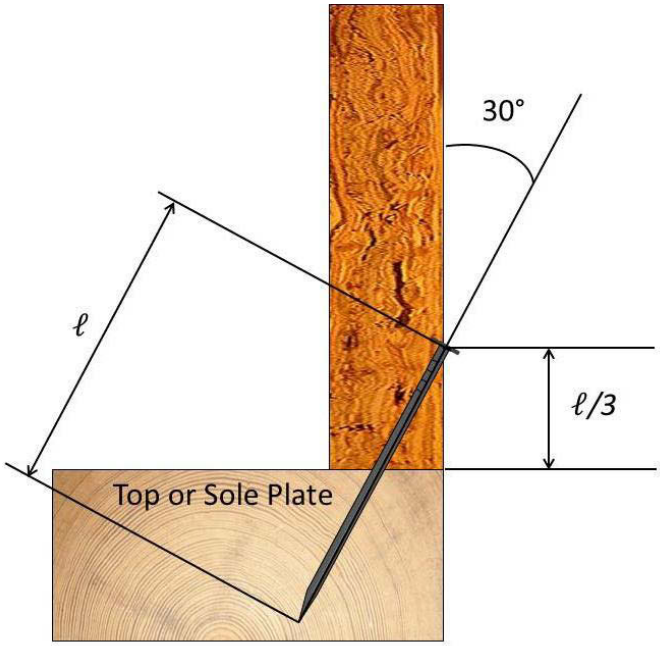

Source: APA W345k. APA Performance Rated Rim Boards® 2009.

Figure 4 – 73: Rim joist toe nailing specifications.
Used under fair use guidelines, 2011.

4.7.5.5 Handling and Storage.

Rim joists must be stored on a flat, level surface raised above the ground, wrapped to prevent exposure to excessive moisture, and stored in a vertical orientation. During a pre-drywall inspection, the inspector may not see the handling errors as they occur, but by becoming familiar with the types of damage caused by poor handling, can have an advantage in detecting damage.

4.8 Oriented Strand Board Sheathing.

Sources: Manufacturer literature and survey questions 12, 13, 15, and 16.

Oriented strand board is a structural panel that is often used as sheathing for roofs, walls, and floors. As the inspector moves through the house, the sheathing materials should be inspected in each room, including the attic. Among the items to inspect for include:

1. Evidence of excessive moisture such as swelling, delamination and deflection
2. Holes
3. Butt joints that are too tight or too loose
4. Bearing
5. Loose panels
6. Lack of construction adhesive at subfloor joints
7. Improper fastener types and spacing
8. Raised fasteners
9. Missing „H" clips in the roof sheathing

Roof sheathing panels have no tongue and groove edges, and should therefore have „H" clips at the butt joints of the long edges between the roof structural supporting members to minimize warping between panels and to maintain proper spacing between panels. Specific conditions may require blocking to support all butt joint edges, but this is a design specification, and the inspector cannot know whether such blocking is needed.

One helpful inspection method is to look for nails that did not penetrate the supporting members. Whenever this is observed, the inspector should press against the sheathing to see if it is loose. There are different requirements for nailing patterns in roof and wall sheathing panels. Around the perimeter, the prescriptive fastener pattern is usually six inches on center, while in the field they should be 12 inches on center (Figure 4 – 74). OSB wall sheathing may be nailed to wall framing either vertically or horizontally, but roof sheathing and subflooring should be installed perpendicular to the framing members. Installation instructions for OSB-based subfloor materials are found in APA (2007). Installation specifications for Huber AdvanTech are found in Huber (No date given).

Figure 4 – 74: OSB subfloor installation. Used under fair use guidelines, 2011.

4.9 Connector Hardware and EWP Connection Types

Sources: Manufacturer literature and survey questions 18 and 19.

The SMEs recommend inspecting all connector hardware components individually. No modifications are allowed except for variable sloped joist connectors and seat connectors, which may be bent to various angles up to the manufacturer"s prescriptive limit. The inspector must check the connectors for signs of being bent or forced to fit structural members not designed for. It is often necessary to climb a ladder to get close enough to inspect connectors. It is common to find that brands and/or connector models are inconsistent throughout the structure. The I-joist manufacturer must approve the connector brands and models. Connectors come in two primary configurations - face mounted and top mounted, and they have slightly different installation requirements. The brand-specific Appendices show details on connector hardware models and fastener requirements. Section 4.7.3.3 discusses connector blocking requirements.

4.9.1 Face Mount Connectors.

Face mount connectors are connected to the side of a supporting member using nails that pass through the side flanges of the connector into the face of the member. The inspector must look closely for evidence of modifications and fastener problems. Figures 4 – 75 and 4 – 76 show typical face mount connector installations. The inspector should check for proper blocking details as previously addressed in the I-joist blocking section.

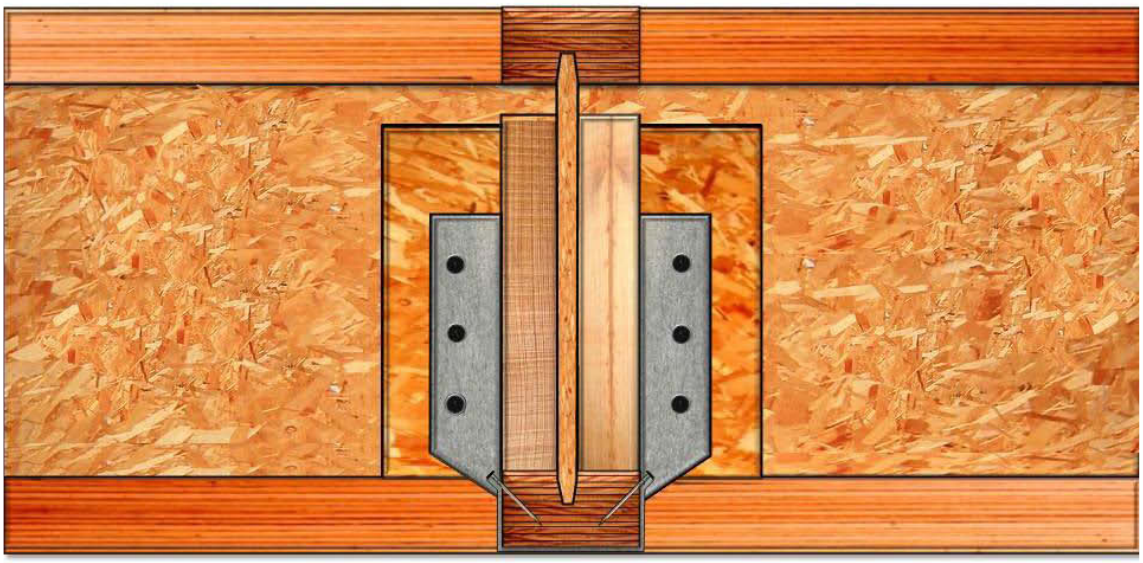

Figure 4 – 75: Typical short height face mount hanger installation.

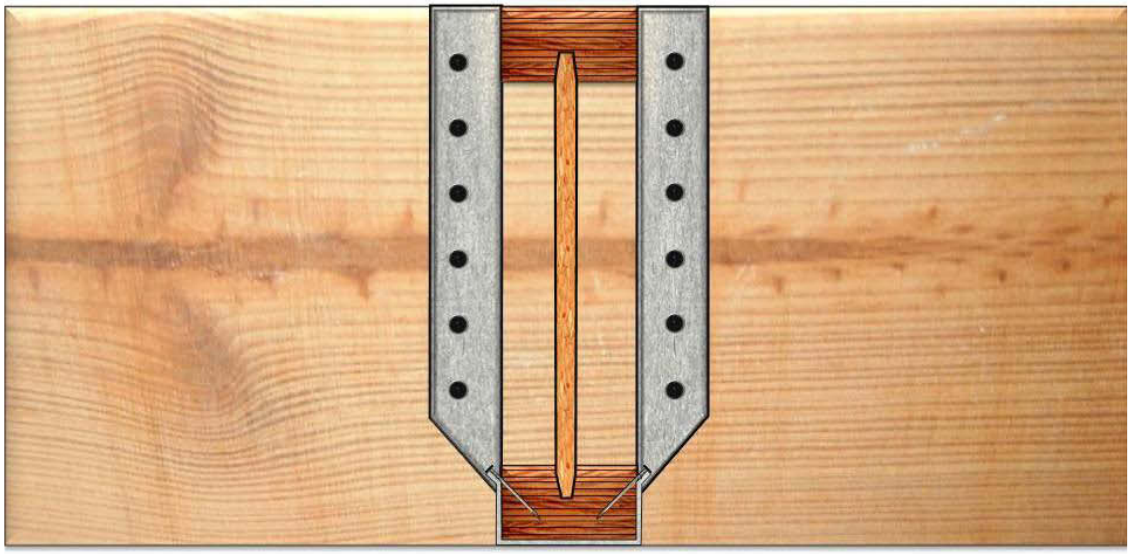

Figure 4 – 76: Typical full height face mount hanger installation.

4.9.2 Top Mount Connectors.

Top mount connectors are located on the side of a supporting member and are connected to the I-joist with nails that pass through the top of the connector that rests on top of the supporting member. To the extent possible, the inspector must look closely for evidence of modifications and incorrect fastener installation. The top strap of the connector cannot retroactively be fastened to the top of an I-joist once the subfloor has been installed. Figure 4 – 77 shows a connector out of plumb, which raises the I-joist up; while Figure 4 – 78 shows a typical top mount connector installation. I-joists used with connector hardware should not be toenailed (Figures 4 - 79 and 4 – 80). Connector hardware should contact the side edges of the top and bottom flanges of an I-joist, and should not be spread apart. Spread connectors raise the I-joist above the plane of the floor surface, creating a hump in the floor and may expose the I-joist web to excessive loading. (Figure 4 – 81).

Figure 4 – 77: Out of Plumb Hanger - raised I-joist.

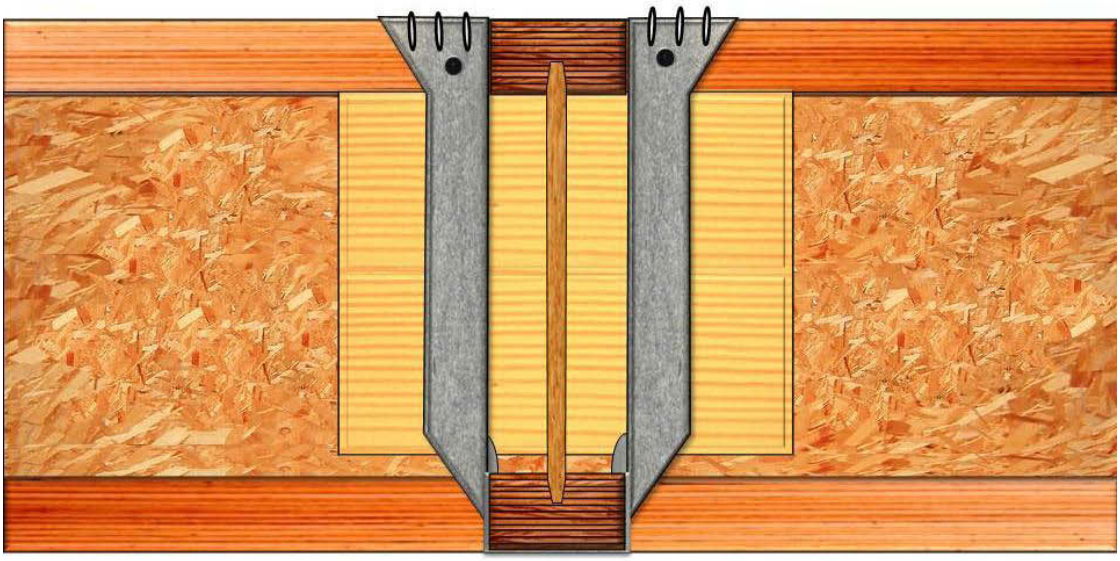

Figure 4 – 78: Correct top mount hanger Installation.

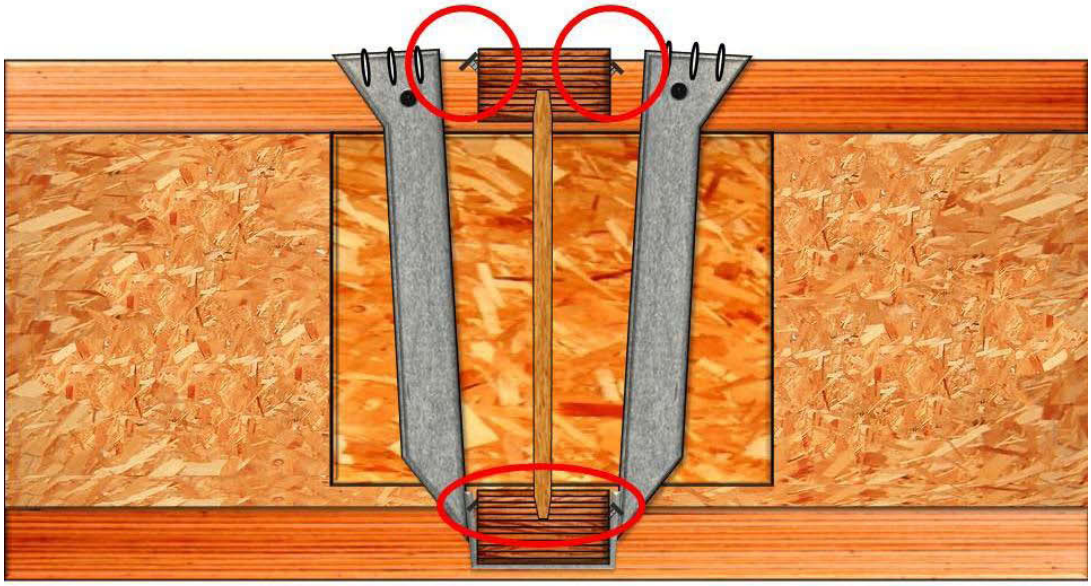

Figure 4 – 79: Toe nailing caused top mount hanger spread.

Figure 4 – 80: Toe nailed installation side view.

Figure 4 – 81: Spread top mount hanger installation.

4.9.3 Connector Pockets.

The supported member must rest fully in the connector pocket to meet the minimum bearing surface requirements. Gaps in connector pockets between the supported member and the back of the connector must be no greater than ⅛". Figure 4 – 82 illustrates an unacceptably large gap in the connector pocket. Note that the side double shear nails cannot engage the sides of the truss. The supported member must not be too wide or too narrow for the connector (Figure 4 – 83). Similarly, the connector pocket may not be too wide or too narrow for the supported member. Figure 4 - 84 illustrates a face mount connector that is too short or has no web stiffeners.

Figure 4 – 82: Excessive gap at back of hanger pocket.

Figure 4 – 83: Wrong hanger for the supported member. The pocket is too wide.

Figure 4 – 84: Wrong hanger – too short and no web stiffeners.

4.9.4 Fasteners.

Each connector must be inspected to confirm that all round and obround holes are filled with the appropriately sized fasteners. The connector specification tables in the brand-specific Appendices show the correct model numbers and fastener specifications of connectors approved for each brand of I-joist and beam. Nails of a smaller diameter or length are not allowed. Some connector nails have the shank diameter of a 10d common nail, but are only 1½" long. These are generally used to attach the connector to the joist, but not to the header or support member, where full-length nails are generally required. Some connectors require shear nails in the sides at the lower pocket. These nails are driven in at an angle and should penetrate through the pre-punched, angled holes in the connector, and through the supported member into the supporting member. A common problem is roofing nails used to support connector hardware. Due to their short length and smaller diameter, they do not meet the prescribed specifications for connector hardware and result in a decrease capacity of the connection. Figure 4 – 85 shows connectors with missing fasteners as evidenced by unfilled holes in the connector.

Screws are almost never allowed to be used with connector hardware. Any screw with a straight slot or a Phillips head is not adequate to provide sufficient supporting strength for a connection. There is at least one brand and model of screw that is designed for use with connectors, and these are #10 SDS screws manufactured by Simpson Strong-Tie. The #8 nails in the same SDS series are not suitable for use with connectors.

Pneumatically driven nails are acceptable if the nails have the correct dimensions and the gun has a „hole finder" attachment. It is not acceptable to shoot nails through the connector flanges where there are no pre-punched holes (Figure 4 – 86), and it is not permissible to overdrive the nails so that they dimple the face of the connector (Figure 4 – 87).

Figure 4 – 85: Hangers with missing fasteners.

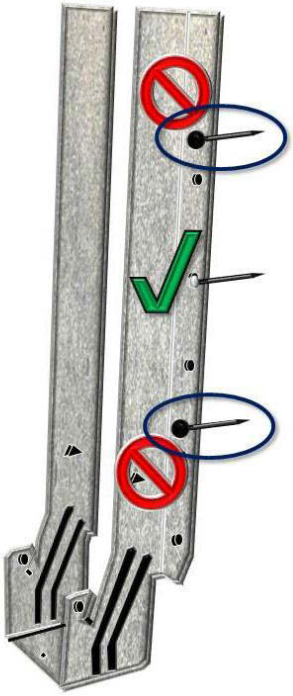

Figure 4 – 86: New holes in hanger prohibited .

Figure 4 – 87: Dimpled Hanger flanges - overdriven nails.

4.9.4.1 I-Joist Connections to Steel Beams.

I-joist connections to steel beams deserve special scrutiny. In this case, only top mount connectors may be used, and a key element of the connection is the nailer plate secured to the top of the steel beam. According to connector hardware manufacturer specifications, Figure 4 – 88 shows the correct way to make this connection, while Figures 4 – 89 through 4 - 91 illustrate common errors in connecting connector hardware to steel beams. Figure 4 – 89 depicts a nailer plate that is too narrow for the width of the top flange of the steel beam. This can result in one of two problems, either the fasteners of the top strap of the top mounted hanger are nailed too close to the nailer plate edge, increasing the risk of fastener tear out (shown on the right side of Figure 4 – 89), or the hanger is raised too high to allow for better nailing of the top strap to the nailer plate (left side of the illustration). Figure 4 – 90 shows a thin nailer plate, which does not allow full penetration of the nails. Figure 4 – 91 illustrates a top mount hanger secured to a nailer plate that is too wide for the top flange of the steel beam. If the plate overhang exceeds the distance specified in the CH manufacturer"s literature, the nailer plate may split along the grain. In each of Figures 4 – 89 through 4 – 91, the strength of the connection may be compromised.

Figure 4 – 88: Proper I-joist-to-steel beam hanger connection.

Figure 4 – 89: Improper connection - nailer plate is too narrow.

Figure 4 – 90: Improper connection - nailer plate is too thin.

Figure 4 – 91: Improper connection - nailer plate is too wide.

4.10 Inspection Methodology: The Top-Down Method

Sources: Survey questions 22, 23, and 24.

A building is a three-dimensional structure and must be examined both vertically and horizontally to detect construction errors. Every BCO and HI interviewed recommends inspecting the house from the top level down through each level to the ground. This is called the top-down method. Figure 4 – 92 shows an overview of the process, while Figure 4 – 93 illustrates the process in more detail.

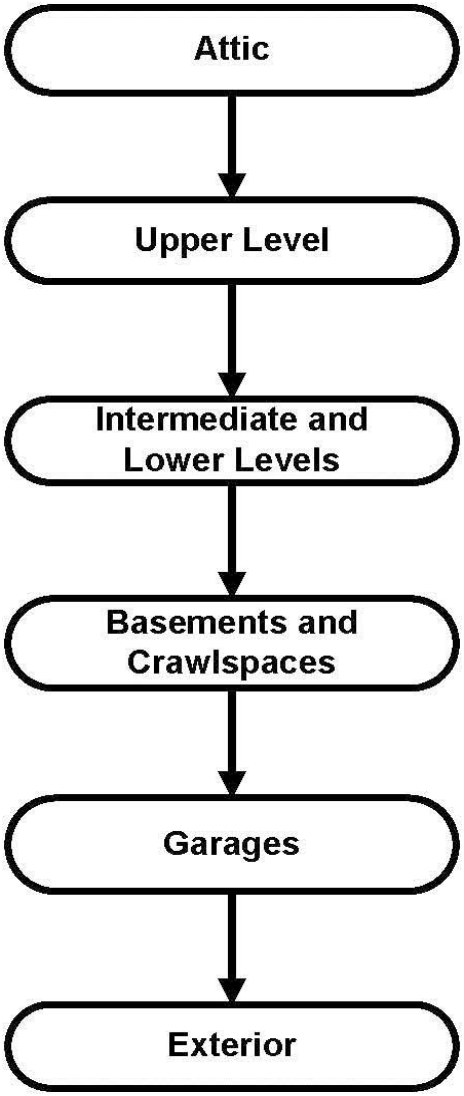

Figure 4 - 92: The top-down inspection process overview.

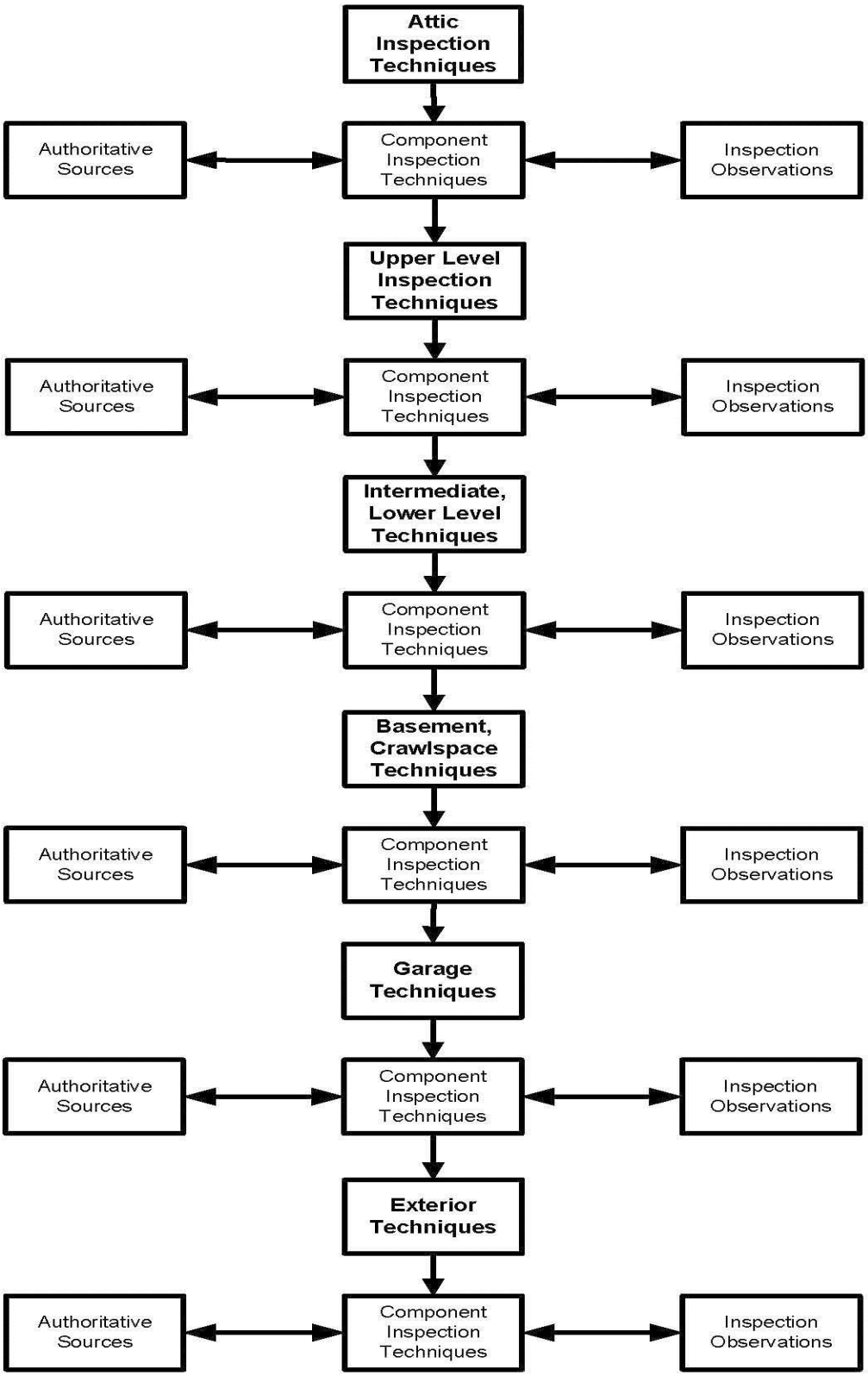

Figure 4 - 93: Detailed top-down inspection process.

Roof and flooring loads originate at the top of the house and pass through the beams and columns to the foundation. These load paths require inspection for continuity, proper connections, bearing, blocking, and other attributes. Load paths are required for all supported structural members including sawn lumber, steel, and engineered wood. Engineered wood products often serve as the beams and columns that define the load path. The inspector must insure that the load paths are uninterrupted. Identifying the location of a concentrated load on one level, and confirming the continuity of the load path to the next lower level is a helpful method. However, difficulty arises in finding a common reference point for measuring a column from one level to the next due to features such as bump outs or changes in the exterior elevation. A useful technique is to create a reference point by driving nails through the subfloor at bearing points and use the nail tips as a reference point at the next lower level. The inspector can then determine whether the vertical path is properly aligned with the level above and below. Load paths may split from level to level. For example, if a concentrated load rests on a beam, the supporting columns carry both the load from the beam, and the added load from the concentrated load from upper levels. Now there are at least two load paths that must be verified.

The SMEs who are allowed to enter attics recommend starting the inspection in the attic if there is one, and proceed downward from the attic to the top level to any succeeding lower levels. SMEs who are not allowed to enter attics begin at the top level of the house. At the lowest level, the inspection must include the fasteners that secure the framing to the foundation or basement slab. Wood sill and sole plates in contact with masonry or concrete must either be physically separated from the concrete (as with a

proper separating membrane) to avoid moisture problems, or must be treated with an approved pressure preservative treatment (PPT) process. The experts suggest inspecting the nails and connector hardware attached to or through PPT wood for evidence that they are either hot-dipped galvanized, stainless steel, or coated with an approved alternative proprietary process to resist galvanic corrosion. Hot-dipped galvanized nails are a dull gray color with a roughened outer surface, stainless steel fasteners appear to be bright and shiny, and many proprietary fasteners are manufactured with a particular color to help identify them.

Crawlspaces may present additional inspection challenges due to low headroom clearance and low light. Inspect the framing structure as you would in the basement, taking care to avoid hazards such as debris, insects, snakes, and wild animals. For added safety, the inspector should always notify someone when entering a crawlspace, and have his/her cell phone readily accessible when inspecting crawlspaces.

Individual inspection zones may include each level of the house, each room, specialized areas such as garages and crawlspaces, and the exterior of the building. Many of the selected EWPs are used in each of these zones, and the inspection techniques for each component are generally the same regardless of location. However, certain zones may require different techniques to properly inspect them. The following sections present inspection techniques recommended by the subject matter experts for the top-down method.

4.10.1 The Attic.

Some building inspection departments and home inspection firms prohibit their inspectors from on climbing on roofs, using ladders, and entering attics and crawlspaces. Although this may increase inspector safety, it may decrease the accuracy and quality of the inspection. For any safety concern, the inspector must determine a reasonable balance between performing the best inspection possible and personal protection. An injured inspector does not benefit a client.

When inspecting inside the attic, the inspector must plan the inspection route to minimize the risks of falling. Moving through attic trusses is often complicated by the placement of lateral bracing, plumbing pipes, heating and air conditioning (HVAC) ducts, and electric cables. Inspector safety therefore requires having solid support under both feet, and at least one hand on a structural support member for balance. Before entering an attic, the inspector should notify another person, and carry a readily accessible cell phone for emergency use.

The attic is usually a dark environment, and requires illumination to conduct a proper inspection. Even when it is bright and sunny outside, attic structural members are often difficult to see. During the summer months attic conditions may be hot. The researcher has measured wood temperatures of 140º F and higher in attics in Virginia. High humidity often accompanies the heat, increasing the risk of dehydration and inspector fatigue, which may result in accidents. It may be necessary to conduct the attic inspection very early in the day, and in short stages to avoid heat prostration, and to minimize the risk of inspection mistakes. Cold weather conditions may make it

necessary to wear heavy clothing that can become entangled in the framing structure and throw the inspector off balance. Not all adverse weather conditions are a detriment to the inspection, however. Rainy conditions provide an ideal time to inspect for moisture intrusion, particularly in attic spaces. The rain can cool attic spaces during hot weather, and may reveal leak problems that otherwise would go undetected.

Tools used in the attic may include:

1. High-powered flashlight
2. Moisture meter
3. Marking devices
4. Screwdriver or other probe
5. Clipboard
6. Camera.

Some tools require the use of both hands. For example, it is sometimes necessary to hold the flashlight beam on a suspected problem area while taking a photograph. Head-mounted flashlights can improve the quality of pictures taken in dark places, and can decrease the risk of losing balance because they free up the use of one of the inspector"s hands, which is available to grip solid structural members.

The inspector must minimize the risk of personal injury inspecting the attic. Some attic areas are too low to safely enter, some are very high above the floor level, some areas may have damaged support members, and others may only have temporary support bracing in place. In dangerous situations, document these conditions in the report and include whatever observations that can be made from a safe location.

The inspector is advised to conduct the inspection using the pre-determined inspection procedure to cover every part of the attic (which may include false dormers and shed roofs), and every attic support member. The inspector should move to a location as close to each inspected member as possible, which may involve the use of ladders where permissible, or binoculars. All roof support members must be properly secured to the structure below. If toenails are used, the chords and flanges may be at a higher risk of damage, which may compromise the structural members and uplift resistance.

The attic inspection includes examining the roof sheathing for problems such as improper holes, fasteners that miss the rafters or trusses, a lack of „H" clips, sheathing that lacks proper spacing, buckled or bulged sheathing, and signs of moisture intrusion. To determine is the sheathing is attached to the framing members, one can press on the sheathing from the underside to observe whether the sheathing lifts off the structural support members. The joints on the short sides (four-foot sides) of each panel should rest on top of bearing elements and be properly fastened in place. The sheathing should be oriented such that the allowable span distance between structural supports is observed. The span ratings for each piece of sheathing are usually printed on the surface of the panel. Span and orientation problems occur most frequently along the apex of the roofline where smaller pieces of sheathing are used, and at hip roof areas formed by open web trusses. Without special bracing, trussed hip roofs may require that the orientation of the strength axis of some sheathing panels be oriented perpendicularly to the other panels.

4.10.1.1 Inspecting Roof Trusses in the Attic.

Proper inspection of attic trusses requires the inspector to look at both the front and back of each truss. There may be problems that are only visible on one side and not the other. For truss attics, it is usually safest to step in the „V"formed where a truss web meets another web or a chord when this is possible. Ducts, pipes, and wires are often laid in these valley areas, and they may rest upon the sharp edges of the metal gusset plates connecting the truss members to the bottom chords. By stepping on one of these, it is possible to slip and fall, to crush ducting, or to damage a pipe or wire creating a leak or the risk of an electrical short. If attic insulation is already installed, the risk and difficulty in traversing the attic is increased. With MPCWTs, examine each wooden member and metal gusset plate. Damaged wood and loose, missing, or re-nailed gusset plates are examples of non-compliant errors. The inspector should inspect where all wiring, ducting, and piping penetrate through or otherwise damage truss members. Any evident repairs to trusses observed during the inspection deserve special attention because damaged trusses can be overlooked by the installers during construction, or if damaged areas are noticed, they may be temporarily „repaired" by the carpenters. These field repairs are often not properly engineered and must be evaluated by an RDP. Indications of improper repairs include undersized sister boards, gusset plate repairs, poor and incomplete fastening patterns, and the use of improper materials. When the inspector has reason to suspect a non-compliant installation or a repair that was not made according to engineering specifications, the situation should be reported in writing to the client, with the recommendation that a qualified registered design professional (RDP) evaluate it, and specify repairs. Qualified construction

professionals should then make repairs. Some clients may elect to have the inspector conduct a post-repair inspection to determine compliance with repair specifications. It is not safe to assume that a repair was executed properly, even when the problem was identified and the repair was professionally designed. Figure 4 - 94 shows a typical view of trusses from inside the attic showing purlin bracing, truss members, and OSB sheathing.

Figure 4 – 94: Typical roof truss view from attic. View of cap trusses in a base and cap truss system.

4.10.1.2 Inspecting I-Joist Rafters.

A difference between I-joist rafters and dimension lumber rafters is that the I-joists must have bearing surfaces at both the top and the bottom edges, while dimension lumber

rafters only require bearing support at the bottom. Sawn rafters rest against a non-bearing ridge board at the roof apex and must be sized so that the ridge board vertical depth is greater than or equal to the length of the miter cut at the upper ends of the rafters.

I-joist rafters require a bearing beam and proper bearing area at the upper end of the I-joist (Figure 4 - 95).

Figure 4 - 95: Bearing ridge beam supporting I-joist rafters. The variable slope hangers are incorrectly installed, as they do not provide proper bearing surface in the pockets.

This beam must have continuous vertical load path support through the house structure to the foundation, and provide restraint against uplift and lateral forces. Each I-joist may either bear on top of the ridge beam, in which case it must bear on a beveled bearing plate to achieve the minimum allowable bearing surface (Figure 4 – 96), or may be

supported by connector hardware to the sides of the ridge beam (Figure 4 – 97). The connector method requires a connector with a variable slope pocket to provide the bearing area while allowing the rafter to slope at the proper angle. The inspector should inspect for splits in the I-joist flanges at the fasteners. The lower end of the I-joist rafter must be secured to the wall or beam bearing members by means of proper fasteners and a beveled bearing plate or a variable slope connector seat (Figure 4 – 98). In each case, proper bearing area must be maintained in accordance with manufacturer specifications.

The inspector should look for split flanges and a lack of prescriptive web stiffeners at the lower end of the I-joists. If there are intermediate bearing structures for a continuous I-joist rafter, the same notching, blocking, and hole limitations apply as for I-joist floor systems.

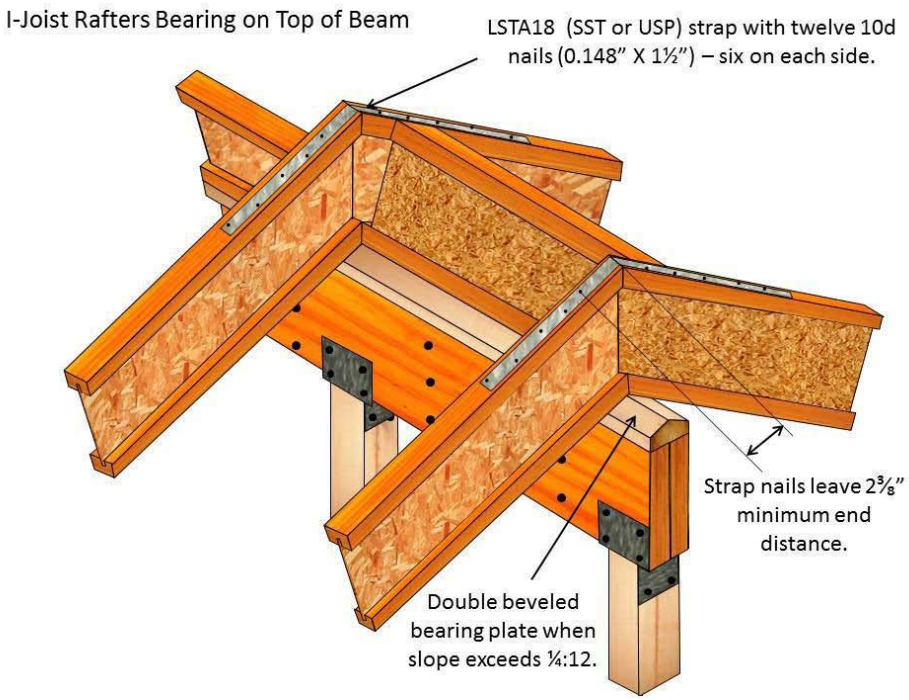

Figure 4 – 96: I-joist rafter connection rests on top of ridge beam.

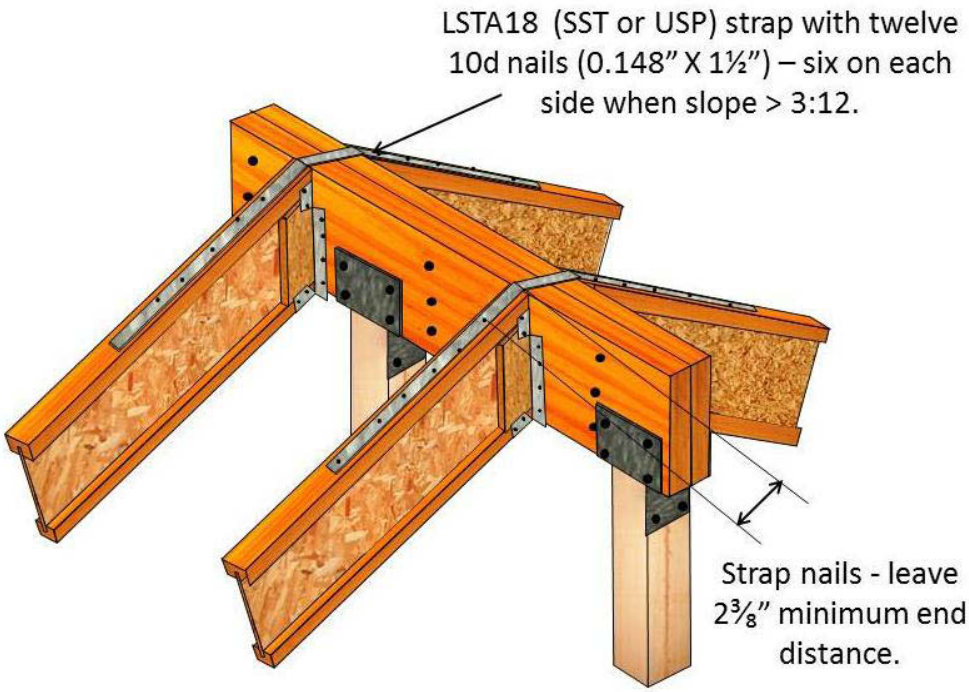

Figure 4 – 97: I-joist rafter connection attached to the sides of ridge beam.

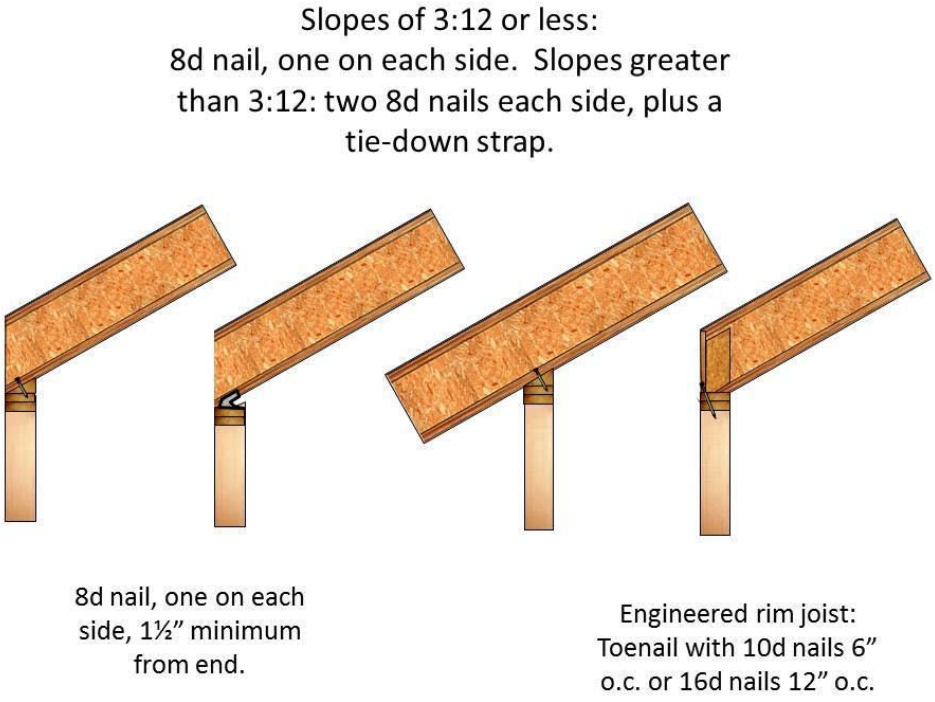

Figure 4 – 98: I-joist rafter connection types at the lower ends.

As previously noted, errors repeated across several components constitute a serious concern that deserves immediate professional attention and repair. Both methods of I-joist attachments to ridge beams require proper fastening and protection against uplift and lateral forces. While „bird‟s mouth‟ seat cuts (angled notches at the lower end of the rafter) are allowed at the bottom of the I-joist, the seat cut should not overhang the inside of the bearing member‟s face. I-joist rafters should not bear on the webs (Figure 4 - 99).

Figure 4 – 99: Improper seat cuts at the lower ends of I-joist rafters. Notice that the lower ends of the I-joists are notched so that they bear on the webbing.

4.10.2 The Upper Level.

The topmost level of the house provides the opportunity to inspect the roof support system, the subfloor, and the structural framing. If the inspector did not enter the attic, the same items listed in the attic inspection section should be examined. One disadvantage of inspecting the attic framing from the top level is that the distance from the roof structural components is greater, reducing the degree of detail that may be seen. Another disadvantage is the inability to focus clearly on each component of each structural member. From the top level, the lack of light in the attic spaces further hinders inspection of the attic structure.

The top level does, however, provide a good vantage point to observe where concentrated loads and load paths develop. Follow the same top-down inspection plan as previously discussed in this chapter. Inspect the columns from the attic support system, jackstuds beneath door and window openings, and headers and supports at bump outs around the perimeter of the house. Some experts recommend sketching a rough map of the upper level illustrating the locations of concentrated loads so they may be more easily tracked as the inspection moves down from level to level. In some cases, bearing columns will rest on top of the subfloor and the rim joists. This requires a careful inspection at the next lower level to insure the presence of proper point load blocking beneath each column to carry the load through the floor/ceiling assembly. Columns may pass through the subfloor and rest directly on the bearing structure below.

Check all beams, headers, and studs for holes and notches, paying close attention to where pipes, ducts, and wires pass through them. Consult the manufacturer literature for details on each brand of proprietary EWP. Always examine areas that appear to have been repaired, as they are at a high risk of having been improperly made. The experts recommend inspecting all cantilever areas closely. Problems to look for include:

1. Blocking above bearing walls
2. Length of cantilever
3. Holes in the cantilever members
4. Location above openings in the foundation

Cantilevers often have beams above them to support roof loads around the openings. Cantilevers require panel blocking between the floor joists at the point where the cantilevered members rest on the bearing wall (Figure 4 - 100).

Figure 4 – 100: Example of a proper cantilever installation.

Inspect the walls for evidence of bowed or out of plane studs and columns. Inspect the top plates of bearing walls carefully. In the majority of cases, the plates on top of bearing walls are doubled, and the butt joints of the top plate members should be staggered by at least 24 inches to avoid having a double butt joint at the same location because a double butt joint can create a hinge in the wall structure. In cases where double butt joints do occur, such as for panelized wall sections, it is important to ensure the presence of metal tie plates that hold them together. These plates must be installed on the top of the wall evenly spaced on both sides of the joint. There should be six nails on either side of the joint. Partition (or non-bearing) walls only require a single top plate, though some have doubled plates anyway.

The inspector should examine the subfloor sheathing to inspect for soft spots, excessive deflection, holes, and fastener problems. Rust stains and swelled OSB may indicate exposure to excessive moisture, and butt joints between panels for raised or moisture damaged areas. All short butt joint edges must be firmly supported by and attached to the floor supports below. The floor should be level and not have significant dips or raised areas that may constitute tripping hazards.

The procedures for inspecting wall sheathing are very similar to subfloor methods, but the inspector can also press against the siding to search for loose sections. It is also easy to see wall sheathing fasteners that did not embed themselves into supporting wall studs. Exterior wall sheathing creates shear walls to help the structure resist lateral loads. Among the most important aspects in a shear wall is the proper nailing pattern around the edges (generally six inches on center), and in the center field of the panel (usually 12 inches on center).

4.10.3 Intermediate and Lower Levels.

If the house has only one level (such as when it rests on a monolithic floor slab), the inspector should conduct the inspection as outlined for the upper level. If present, intermediate levels allow the inspector to view the underside of the floor system above, making it easier to spot subfloor fastening and buckling problems, point load blocking problems, and floor joist problems. The SMEs recommend that the inspector develop the habit of looking up to inspect. Scan the joist system using the repetitive pattern of the joists as a reference for out-of-plane, upside down, or reversed joists or trusses. Look for the presence of construction adhesive squeeze out on top of the floor joists where the subfloor is attached.

Follow all pipes, ducts, and wires where they pass through the framing members and the subfloor above. Inspect the bearing areas of the floor joists and beams to check for:

1. Bearing surface
2. Shimming
3. Uneven support such as bearing on wedges
4. Fasteners.

Use the rough sketch from the upper level(s) to trace concentrated load paths and be sure proper blocking is in place. If there are other levels below, the inspector will need to add concentrated loads to the load path sketch begun from the upper level. Intermediate floors often involve the addition of center bearing walls and columns that support the upper level flooring system.

4.10.3.1 Floor Systems.

The BCO and HI SMEs recommend that the inspector view each I-joist or truss for proper bearing, holes through the webs, excessive deflection, damaged areas, and connector hardware connections. Similarly, the experts suggest viewing the rimjoists for proper bearing, and for the presence of point load blocking beneath bearing columns above. These blocks must be located directly beneath columns and jackstuds, and must cover the same area as the base of the column. Point load blocking is to be installed as the house is being built to insure that they make full contact with the underside of the subfloor and the top of the bearing member. Where squash blocking is used in the case of I-joist floor systems beneath perpendicular bearing walls, vertical squash blocking must be cut to a height that is $\frac{1}{16}$ inch taller than the I-joists and installed before the subfloor. Panel blocking of the same height as the I-joists may also be used. Retrofitted blocking is a potential problem area. When installed after the subfloor, the blocking has to be cut shorter than the height of the I-joists in order to force it into place, rendering it ineffective. Retrofitted blocking will therefore not make full bearing contact at the top and bottom of the blocks, which can force excessive loads to pass through I-joist webs. The experts recommend inspecting the floor trusses for damaged chords, webs, and gusset plates, and for upside down or backward trusses. If strongbacks are present, they must not be cut.

4.10.4 Basements and Crawlspaces.

For the most part, inspecting a basement is similar to inspecting the lowest living level in the house as described above. In addition, observe the rimjoists to be sure they rest

fully on a sill plate that bears on an appropriate foundation. Sill plates are often pressure preservative treated wood, which requires hot dipped galvanized steel or stainless steel fasteners and connector hardware to avoid corrosion. Borate treated wood (which generally has a light turquoise color rather than the darker green of copper based treated wood) contains no copper and is therefore far less corrosive to steel than most preservative chemicals. Some codes may require corrosion-resistant fasteners anyway. Sill plates and rimjoists that overhang the outside face of the foundation may introduce an unintended cantilever loading on the joist system. Inspect all cantilevers to insure the required panel blocking is in place between the joists, and that the panels have properly sized ventilation holes cut in the proper locations. Cantilever bearing members must not rest over unsupported door or window openings in the foundation (Figure 4 - 101). Floor joists that bear over foundation openings need proper supporting structures to carry the load around the opening. Joists may be supported by connector hardware on beams or doubled rim joists or on some other bearing structure.

Figure 4 - 101: Improper cantilever - I-joist rests over opening. A doubled I-joist beam on the left side rests over an unsupported opening in the foundation wall.

For crawlspaces, use the same inspection techniques to inspect the floor structure, rimjoists, and cantilevers as described above. The inspector should always notify someone when entering a crawlspace, and have a cell phone readily available in case of trouble. In new construction, sufficient crawlspace access is required by the building code; however, they are often dark and musty. The IRC building code addresses ventilation and vapor retarder requirements, which vary by geographic location. Different ventilation specifications depend on whether the local climate is hot and humid during the summer months, hot and dry during the summer months, or is located in northern climates of the US. Ventilation principles must be observed to protect the engineered wood located in the crawlspace.

Even in new construction, crawlspaces are often attractive to animals, particularly during cold weather. Be alert for animal droppings, nesting materials, and for glowing eyes that reflect back from the flashlight. The experts suggest exercising caution in performing crawlspace inspections. Cases of spider bites, animal attacks, and infection by the hanta virus have been reported from inspection activities in crawlspaces. Venomous snakes may also be present.

As in the basement, the experts recommend that the inspector should special attention to anchor bolts or straps that secure the framing to the foundation. All non-pressure treated beams should have a minimum of 18 inches of clearance to grade, and joists must have at least 12 inches of clearance. Useful tools may include handheld or head-mounted flashlights, a moisture meter, kneepads, hardhat, overalls, pepper spray, and a probing device such as a screwdriver or an awl.

4.10.5 The Exterior

Since the framing structure is concealed by house wrap, there may not be much that the inspector can see (Figure 4 - 102). The inspector should circle the house viewing the flat

Figure 4 - 102: Exterior house wrap obstructs a visual inspection. The blue house wrap covers up most of the framing details for exterior inspections. However, it does illustrate the gaps around the windows that should be sealed up. The lower edge appears to be covered up, making it difficult to view the fasteners that connect the wall

plane of the walls for irregularities such as bowed walls or framing that overhangs the foundation walls. The inspector should inspect for damaged sheathing, cantilevers, and fasteners used to connect sheathing to the frame structure. In most cases, the roof is under ice shield, felt paper, and shingles, which seriously limits the extent to which roof sheathing can be inspected.

Experts suggest lifting the lower edge of the house wrap to check the color and texture of the bottom row of sheathing fasteners. Before inspecting the exterior, determine what type of wood was used for the interior sill plates. The inspector can look at the color of the plates as a guide – a darker green color usually indicates copper-based

preservative chemicals, while a lighter turquoise color is typical of borate treated wood. As described earlier, some pressure preservative treated wood is potentially corrosive to unprotected steel fasteners, and requires the use of hot dipped galvanized steel or stainless steel fasteners. Fastener color and texture were described earlier as a means of identifying stainless steel and hot-dipped nails. The bottom row of fasteners connects the sheathing to the sill plate and must be either stainless steel or hot-dipped galvanized. Standard nails are suitable for use on all edges of sheathing panels that do not attach to pressure treated sill plates.

Experts recommend that the inspector examine cantilever joists and beams to ensure members bear on a suitable substructure, proper panel blocking is used between the cantilever members, and proper fasteners are used. Cantilever prescriptive guidelines were developed based on the assumption that the cantilevers have a uniform loading. The inspector should focus on concentrated loads occurring on cantilever structures. In some cases, the foundation walls are constructed out of square, while properly squared framing is built on top. This lack of a properly squared foundation may result in unintentional cantilevers where the sill plates and rimjoist overhang the exterior face of the foundation walls. Overhanging rim joists may not provide a proper load path to the foundation.

4.11 Computer Software Application

The information and inspection methods determined from the SMEs were distilled into a computer software application. This section presents a brief discussion of the development of the computer software application, presents features of the application, describes the user interface screenshots of the program, and provides brief instructions on how to use the application.

Figure 4 - 103 summarizes the software development process described in Chapter 3. Using the Delphi approach, the software concept was presented to the BCO and HI SMEs during the first interview, and the experts contributed recommendations for the software development. The expert suggestions were incorporated into the revised version, which was demonstrated to the BCO and HI SMEs during the second interview. The experts validated the software application at the conclusion of the second interview based on the concept of high face validity.

The HomeGauge home inspection software program (HomeGauge, 2010) serves as the basis upon which the pre-drywall inspection application was developed. Use of the term „application" is intended to signify that this project did not contribute to the development of the HomeGauge software. Instead, the developed inspection module was constructed to take advantage of the features of the HomeGauge program, while providing unique functionality to serve the purposes defined in Chapter 3 for the pre-drywall inspection software. This application is primarily intended for use by field inspectors to assist in identifying and documenting evidence of prescriptive non-

compliant EWP and CH installations and to provide reference documentation to support the observations. Some of the surveyed experts said that they intend to use the application materials for inspection training purposes as well.

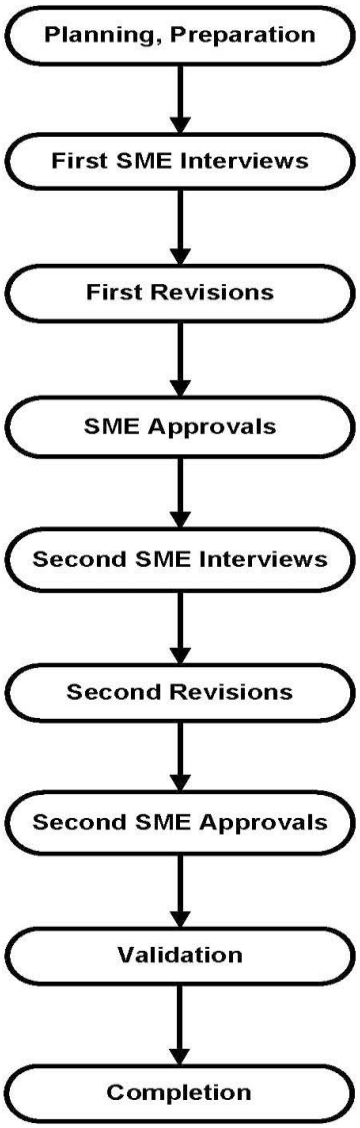

Figure 4 - 103: Software development overview.

4.11.1 Features of the Developed Software Application.

The following custom features were developed for the application:

1. Selection menu of the EWP and CH components: Six specific brands of engineered wood products and two brands of connector hardware were selected for inclusion in the project because they are commonly used in Virginia and there are no direct references for their use and installation in the IRC.

2. Selection menu of the high-risk areas and installation problems areas of each component derived from SME input (Figure 4-2).

3. Selection menu of suggested pre-written comments: The pre-written comments address the high-risk areas, and are based on manufacturer literature and on input from the SMEs.

4. Authoritative source documentation: Reference materials include information provided by manufacturers of proprietary EWPs, from expert third party organizations, and from the SMEs.

5. Custom technical illustrations: Technical illustrations are included to graphically depict the problems.

6. Inspection techniques: Methods developed by the BCO and HI SMEs are presented to the inspector as an on-site reference source to systematize the inspection.

4.11.2 Use of the Developed Software Application.

Design of the HomeGauge program (HomeGauge, 2010) suggest the order in which the information can be entered into the program and the method for printing the resulting inspection report. Figure 4 - 104 illustrates an example in schematic form of the selection and documentation process for one problem involving a metal plate connected wood truss. The example show the selection of the component of interest (MPCWT), selection of the high-risk area (Piggyback trusses), the pre-written comments on the problem (lack of diagonal bracing), and the reference material that documents the validity of the observed problem.

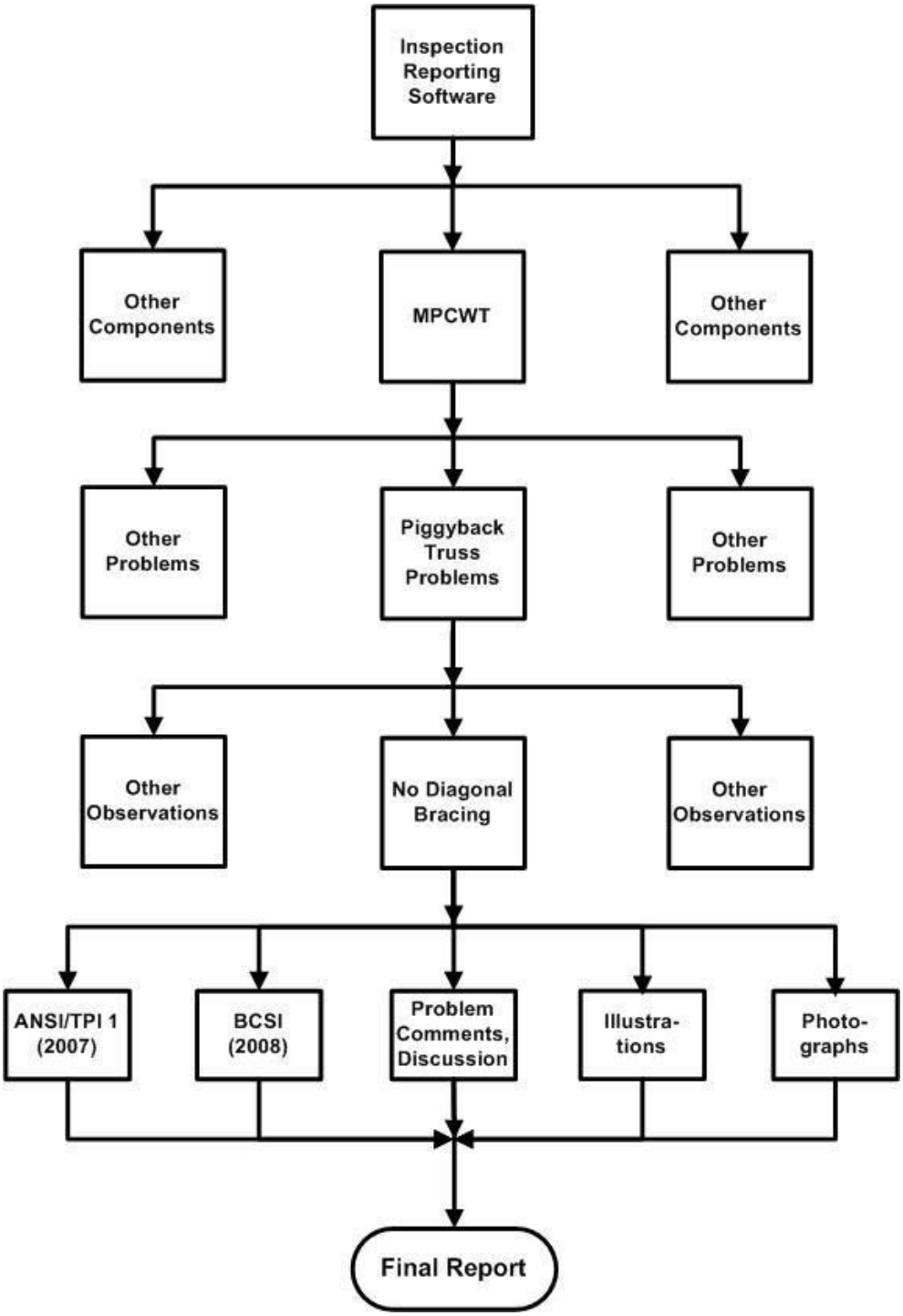

Figure 4 – 104: Detailed process for using software. This illustrates one example involving a roof truss using the software application.

To use the developed software application, the inspector chooses the EWP or CH component from the list located at the lower left column on the first page of the software (Figures 4 – 105 and 4 – 106). Once the component has been selected, a menu appears showing a list of potential problem areas (Figure 4 - 107). Each problem area has comments and/or explanations that the inspector can use to document the number of occurrences of each problem and their location within the structure (Figure 4 – 108). Each problem area has a statement that recommends further evaluation of the problems by an RDP. The program provides the inspector with options include the reference material in the final report, change the provided material, or omit it altogether. The inspector has full control over all comments in the report, and may use or ignore the pre-written comments. The inspector has full control at all times over the comments, photographs, illustrations, etc. included in the final report.

For each brand of proprietary component, the inspector can elect to include brand-specific manufacturer literature in the report, or may refer to this literature for his/her own use. For non-proprietary products such as MPCWTs, authoritative reference source material is also provided. Many problem areas have technical illustrations that provide further information on the problem (Figure 4 – 109). The provided documentation and technical illustrations may be included in the final report. Inspectors often take photos of actual conditions in the inspected structure, and these may be captioned and inserted into the report. Figure 4 - 110 shows two ways the expert-developed inspection techniques can be accessed by the inspector.

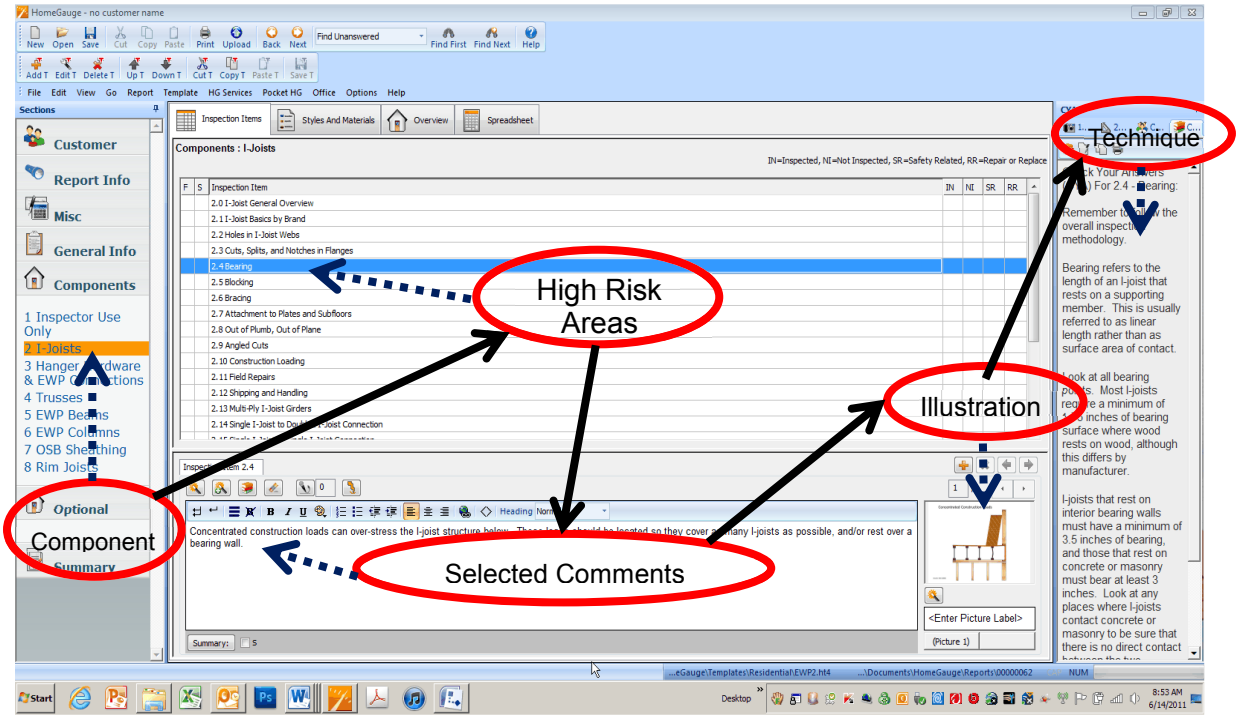

Figure 4 - 105: Overview of how to use the software application. (HomeGauge screenshots used with permission.)

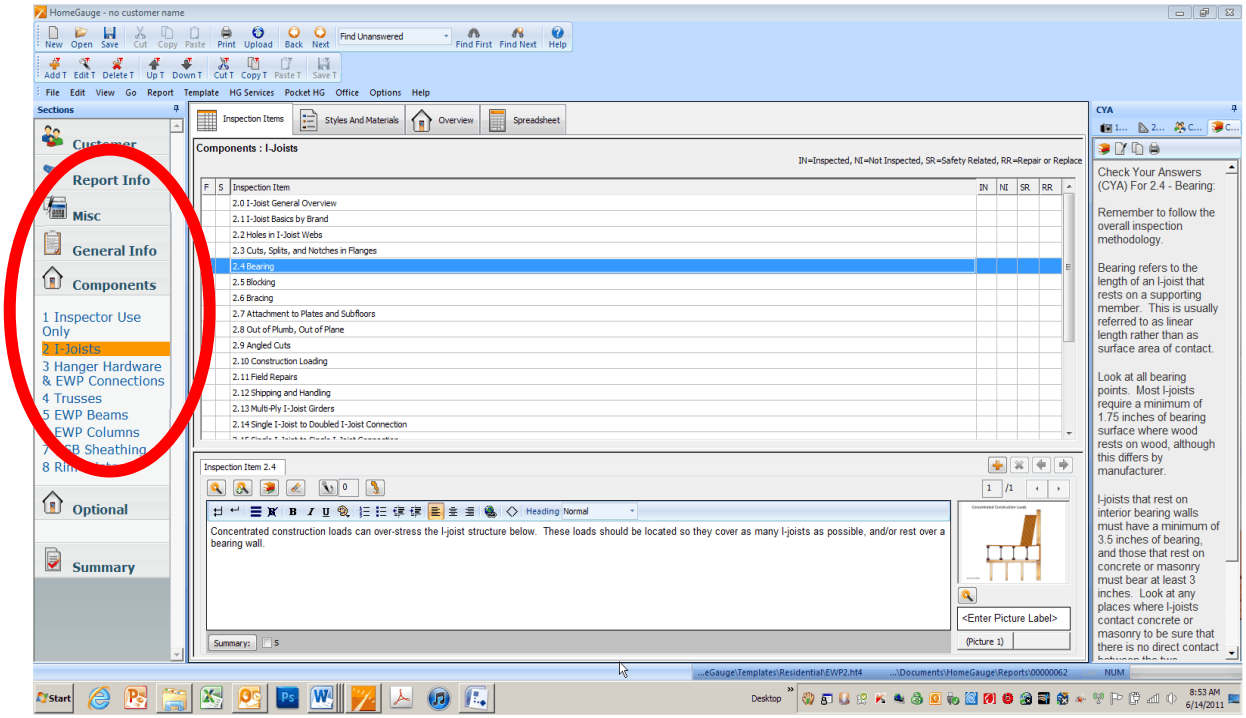

Figure 4 – 106: Screenshot of the application component panel. (HomeGauge screenshots used with permission.)

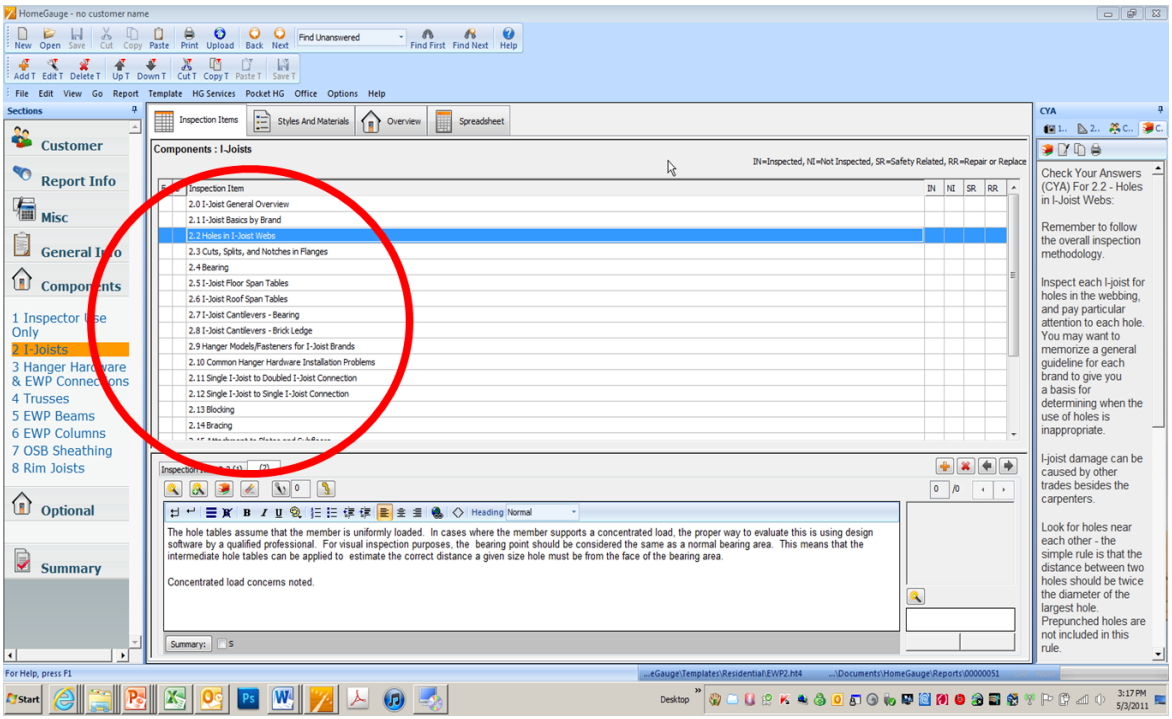

Figure 4 - 107: Screenshot of the problem area selection panel. (HomeGauge screenshots used with permission.)

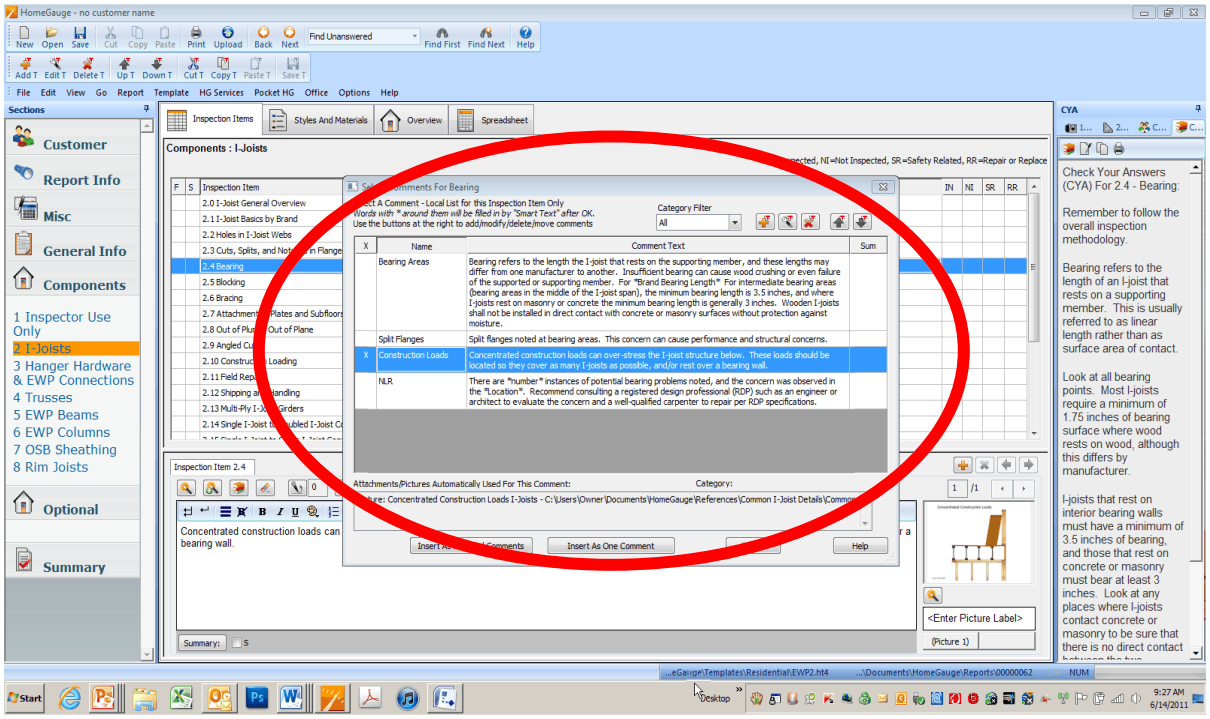

Figure 4 – 108: Panel showing comment selections. (HomeGauge screenshots used with permission.)

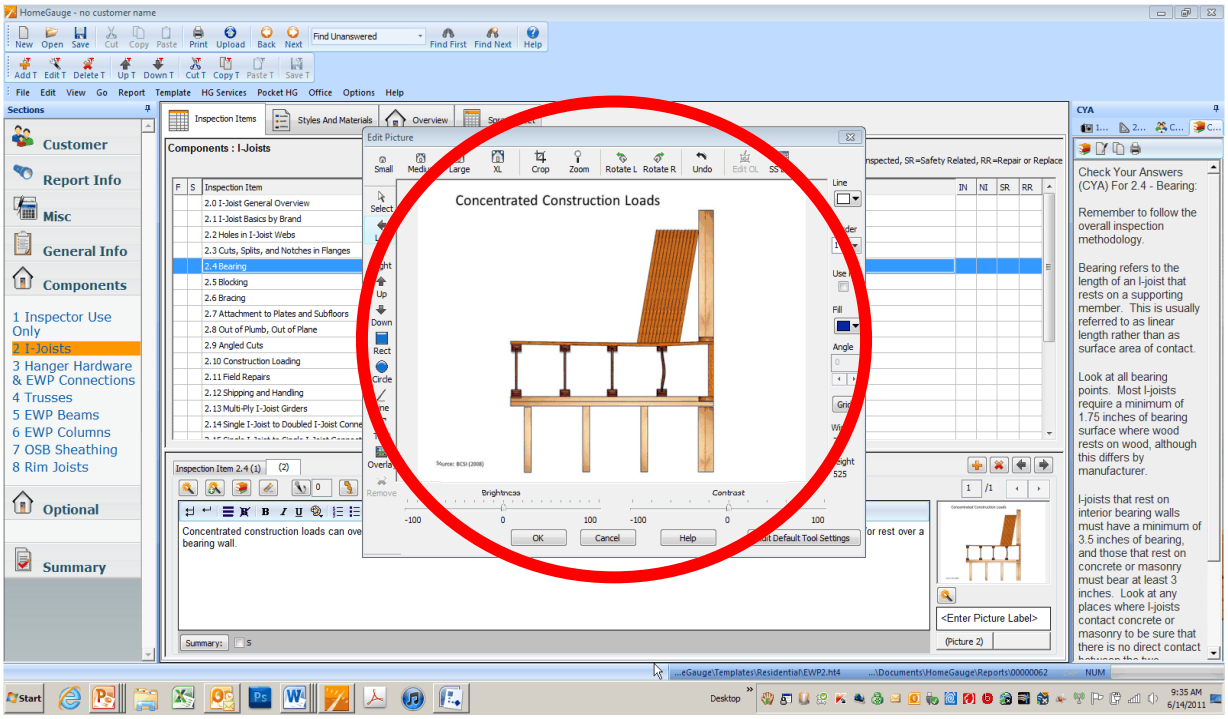

Figure 4 - 109: Panel showing one of the provided illustrations. (HomeGauge screenshots used with permission.)

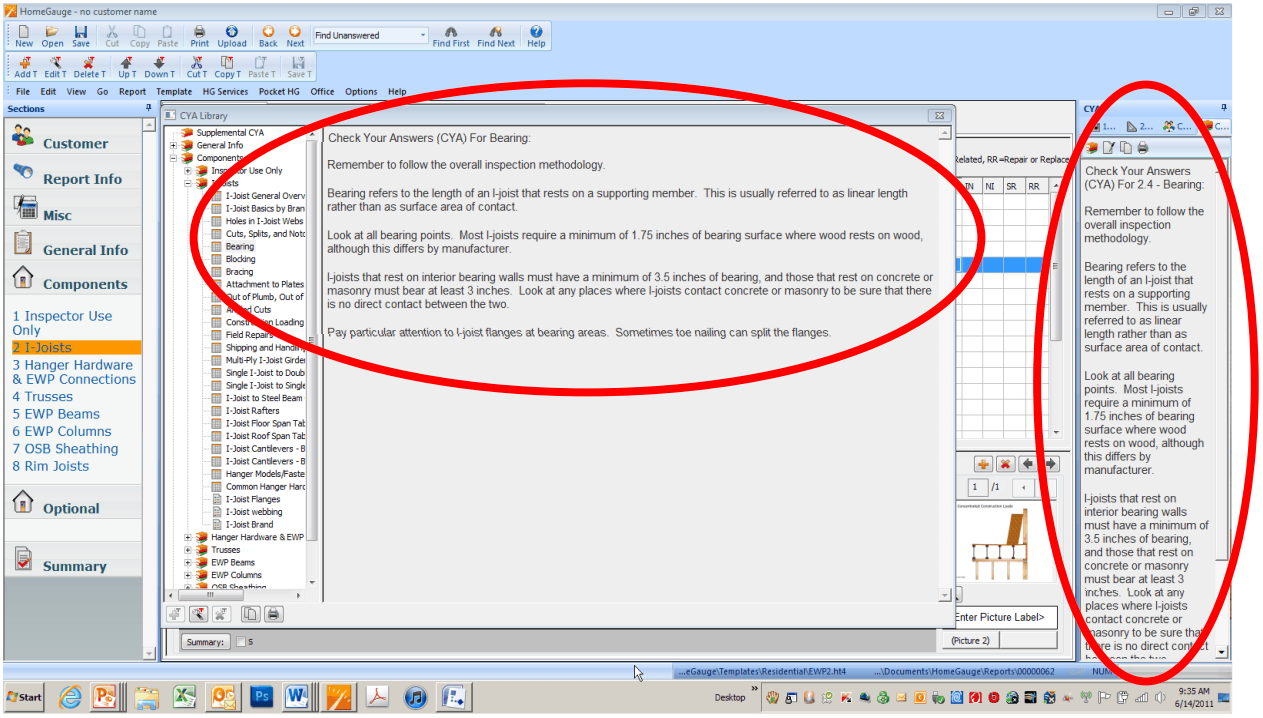

Figure 4 – 110: Software application inspection techniques panel. Detailed inspection techniques are found in the right panel of the main screen, and they can be viewed in a larger techniques screen (center). (HomeGauge screenshots used with permission.)

It is not possible to include the completed software application in the printed version of this dissertation. For further information, contact the author at johnbouldin@vt.edu.

4.12 Summary

This chapter presented the results of the project and a discussion of the inspection methodology. The discussion included the process used to create the inspection methodology, development of the knowledge base, development of the source documentation, and development of the software application. Inspection techniques for each selected engineered wood product and connector hardware are presented, along with techniques for the inspection of different physical areas (zones) of the structure. The software application features and use are described. The next chapter presents the conclusions of the project.

5.0 Summary, Conclusions, and Future Research

This chapter presents the project summary, conclusions, and recommendations for future research. This project documents the development of an inspection methodology for prescriptive non-compliance of engineered wood products in new residential construction. The objectives were:

1. To develop a methodology development process
2. To develop an inspection software application

5.1 Summary

The research method used in this project consisted of a modified Delphi process to develop the inspection methodology and software application.

1. Preparation

The researcher proposed a framework for development of the methodology, knowledge base, and software application. Professions were chosen from which the subject matter experts would be selected. For each professional group, a determination was made regarding the desired inputs from each group, and the degree of participation for each group in the software application development and validation process. Determination of the requirements for 'expert' status was developed for each group of professionals. Selection of individual experts was based on a peer nomination process. The methods

for obtaining, refining, and validating information were defined. The criteria for project validation were determined. The interview survey instrument was developed.

2. Methodology Development and Validation

Interview survey responses were gathered from the subject matter experts. The researcher proposed specific reorganization of certain responses, documented the suggestions for each revision, and presented the revised material to each BCO and HI SME. The BCO and HI SMEs confirmed the accuracy of the entered responses and determined that the proposed revisions were acceptable. The developed information was used to refine the methodology. The first interviews were conducted, during which the survey was administered. The experts made suggestions for revisions. The revisions were made and approved by the BCO and HI SMEs. A second interview was conducted during which the revised knowledge base and software application were presented to each BCO and HI SME, and the second survey was administered. The experts required no further revisions. Each BCO and HI SME validated the project and each of its components based on the predetermined validation criteria.

3. Developed an Inspection Software Application

The researcher selected the platform upon which the software application was built. The application was developed from the recommendations of the subject matter experts. The application enables inspectors to (a) select the manufactured component of interest,

(b) select problem areas for each component, (c) access prepared comments, illustrations, and authoritative reference documentation. The software enables the inspector to insert his/her own observations and photographs, and refer to the inspection techniques recommended by the experts for each area of interest.

5.2 Conclusions

The following conclusions are drawn from the research conducted for this project. The conclusions are derived from the interview survey responses of a panel of subject matter experts using a modified Delphi research process as described in Chapter 3. The objectives for the project have been satisfied through this approach.

1. The SMEs determined that there are problems in the installation and inspection of engineered wood products and connector hardware. This is due in part to the fact that the installation instructions are not found in building codes. The BCO and HI SMEs further agreed on the need for the methodology and software application developed through this research as an aid to inspectors in the field, and as a training vehicle. Technical illustrations developed in the project and included in the software were determined to be valuable by the BCO and HI SMEs in the inspection of wood structures.

2. Authoritative reference materials for determining problem areas with engineered wood products and connector hardware can be found for each of the selected components, but there is no single source for this information and the presentation of the material is not standardized, making it difficult to understand. The software developed in this project provides ready access to the authoritative reference documents for conducting inspections.

3. The BCO and HI SMEs in this study use a systematic inspection method that begins at the top of the structure and proceeds down through successive levels to the foundation. The experts recommend using the repeating patterns of EWP installation as a useful inspection framework. Further, the BCO and HI SMEs identified both component-specific and zone-specific inspection techniques.

4. The subject matter experts identified the areas for each of the selected components that are at high risk for non-compliant installation. The BCO and HI SMEs identified 14 high risk aspects for metal plate connected wood trusses, 11 for I-joists, seven for structural composite lumber beams and columns, five for engineered rim joists, nine for oriented strand board sheathing and subflooring, and eight high risk areas for prefabricated metal connector hardware.

5. According to the BCO and HI SMEs, inspectors need the inspection computer software to identify selections for the included engineered wood and connector hardware components, provide a selection menu for the high-risk problem areas

for each component, and a menu of pre-written comments for each problem area. The experts further agreed that the software must include authoritative reference materials and provide inspection techniques. The software developed in this project includes those features deemed to be of importance by the BCO and HI SMEs.

6. The Delphi method appears to be an appropriate approach for this line of research. Using the Delphi method, the BCO and HI SMEs validated the methodology and the software application based on the concept of high face validity. The experts approved modifications made to the methodology and the software after incorporation of the information gathered from the first interview, and provided final validation of the methodology and software at the conclusion of the second interview.

5.3 Recommendations for Future Research

There are inherent problems in determining the degree to which inspection practices can reduce instances of EWP non-compliance, largely due to a lack of comparative information. Future research should address the need for collection of basic information needed to further test and refine inspection methodologies. Specifically, research should be conducted to address the following:

1. The lack of information on the extent of the problem of undetected prescriptive non-compliance problems.

2. The lack of other inspection methodologies against which the developed system can be compared.

3. The lack of information on how effective current code inspection and home inspection processes are.

4. The lack of national and regional data on EWP non-compliance that result from the code inspection process.

5. The lack of national and regional data on EWP non-compliance that result from the home inspection process.

6. Development of a systematic methodology and software program for other inspection problem areas such as:

    a. Equipment whose specifications are not found in the building codes
    b. Solid-sawn lumber framing
    c. Plumbing systems
    d. Electrical systems
    e. Heating, ventilation, and air conditioning (HVAC) systems
    f. Foundations

References

Abdul-Rahman, H. (1993). Capturing the Cost of Quality Failures in Civil Engineering. *The International Journal of Quality & Reliability Management.* Bradford: 1993. Vol. 10, No. 3; p. 20. Retrieved March 26, 2009 from ProQuest database.

AF&PA, 2005. *National Design Specification for Wood Construction*. Washington, DC: The American Forest and Paper Association American Wood Council.

Agresti, A. (2002). *Categorical Data Analysis,* Second Edition. Hoboken, NJ. Wiley.

Al-Chaar, G., Issa, M.A., & Hayes, J.R. (2002). *Inspection Procedures for Military Wood Structures ERDC/CERL TR-02-10.* Construction Engineering Research Lab. Champaign, IL: US Army Corps of Engineers Engineer Research and Development Center. Retrieved August 4, 2009 from NTIS database.

Anderson, C.A., Woeste, F. & Loferski, J.R. (2003). *Manual for the Inspection of Residential Wood Decks and Balconies.* Madison, WI: Forest Products Society.

ANSI (2010). *ANSI Essential Requirements: Due Process Requirements for American National Standards.* New York, New York: American National Standards Institute. Retrieved 2009 from http://publicaa.ansi.org/sites/apdl/Documents/Forms/AllItems.aspx.

ANSI/AF&PA (2001). *Wood Frame Construction Manual for One- and Two-Family Dwellings*. Washington, DC: American Forest & Paper Association, Inc.

ANSI/TPI (2007). *National Design Standard for Metal Plate Connected Wood Truss Construction*. Alexandria, VA: Truss Plate Institute.

APA (2004). *Technical Topics TT-041B Holes in Rim Board Used in Conventional Construction.* Tacoma, WA: APA – The Engineered Wood Association. Retrieved 2009 from http://www.apawood.org/.

APA (2007). *Engineered Wood Construction Guide, Form E30U.* Tacoma, WA: APA – The Engineered Wood Association. Retrieved July 26, 2011 from http://www.apawood.org/pdfs/managed/E30EWP.pdf?CFID=2572705&CFTOKEN=66148117.

APA (2009). *APA Performance rated Rim Boards.* Tacoma, WA: APA – The Engineered Wood Association. Retrieved 2010 from http://www.apawood.org/.

APA (2010a). *A Glossary of Engineered Wood Terms.* Tacoma, WA: APA – The Engineered Wood Association. Retrieved 2010 from http://www.apawood.org/level_b.cfm?content=srv_med_new_bkgd_gloss.

APA (2010b). *Engineered Wood and the Environment: Facts & Figures.* Tacoma, WA: APA – The Engineered Wood Association. Retrieved 2010 from http://www.apawood.org/level_b.cfm?content=srv_env_facts.

ASHI (2006). *The Standards of Practice and Code of Ethics of The American Society of Home Inspectors.* Des Plaines, IL: American Society of Home Inspectors. Retrieved from http://www.ashi.org/

ASTM (2001). E-2018 – 01. *Standard Guide for Property Condition Assessments: Baseline Property Condition Assessment Process.* West Conshohocken, PA: ASTM International.

ASTM (2002) D 5055. *Standard Specification for Establishing and Monitoring Structural Capacities of Prefabricated Wood I-Joists.* West Conshohocken, PA: ASTM International.

ASTM (2004). F-1754 – 97 (Reapproved 2004). *Standard Guide for Marine Vessel Structural Inspection Considerations*. West Conshohocken, PA: ASTM International.

ASTM (2005). D9 – 2005 *Terminology Relating to Wood and Wood-Based Products.* West Conshohocken, PA: ASTM International.

ASTM (2010) D 5456. *Standard Specification for Evaluation of Structural Composite Lumber Products.* West Conshohocken, PA: ASTM International.

Atkinson, A. (1998). Human Error in the Management of Building Projects. *Construction Management and Economics*, Vol. 16, No. 3, pp. 339-349. Retrieved January 12, 2010 from Compendex database.

Baró, E., Carulla, J., Cassinello, J., Colomer, R., Mata, J.G., Gascón, P., Gasquet, J.A., Herdman, M., Rodríguez, C.A., Sánchez, J. & Valentín, V. (2008). Development of a New Questionnaire to Assess Patient Perceptions of Cancer-Related Fatigue: Item Generation and Item Reduction. *Value in Health*, Vol. 12, No. 1. Retrieved 2010 from http://download.journals.elsevierhealth.com/pdfs/journals/1098-3015/PIIS1098301510606845.pdf.

Bashford, H., Sawhney, A., Walsh, K. & Thompson, J. (2005). Residential Construction and the Influence of Inspections on Cycle Time. *Construction Research Congress* 2005 pp. 145 - 151; San Diego, CA. Retrieved January 11, 2010 from Compendex database.

BCAP (2011). *Code Status: Mississippi.* Washington, DC: Building Codes Assistance Project. Retrieved June 30, 2011 from http://bcap-energy.org/node/77. Building Codes Assistance Project.

BCSI (2008). *Building Component Safety Information: Guide to Good Practice for Handling, Installing, Restraining & Bracing of Metal Plate Connected Wood Trusses*. Madison, WI: Wood Truss Council of America, and Alexandria, VA: Truss Plate Institute.

Becker, N. (2002). *The Complete Book of Home Inspection*. New York: McGraw-Hill.

BLS (2010). *Career Guide to Industries, 2010-11 Edition.* http://data.bls.gov/cgi-bin/print.pl/oco/cg/cgs003.htm Retrieved January 16, 2010. Washington DC: The U.S. Bureau of Labor Statistics.

Bobo, S. N. (1995). Visual Inspection as an Organized Procedure. *SPIE*, Vol. 2455. Retrieved 2010 from Compendex database.

Bodig, J. (2005). Wood Engineering Mechanics – Some Personal Observations. *Wood and Fiber Science Journal of the Society of Wood Science and Technology*. Vol. 37, No. 1, pp. 1-2.

Boise Cascade (2009). *AllJoist Specifier Guide.* Boise, ID: Boise Cascade. Retrieved 2010 from http://www.bc.com/bmd/product.html.

Bouldin, J.C., & Showalter, J. (2008). Good Design Should Consider Poor Execution. *Wood Design Focus,* Vol. 18, No. 2.

Broder, M. (2008). *The Delphi Panel.* Retrieved 2011 from www.pharllc.com. Beverley Hills, CA: Partnership for Health Analytical Research.

Burati, J.L. Jr., Farrington, J.J., & Ledbetter, W.B. (1992). Causes of Quality Deviations in Design and Construction. *Journal of Construction Engineering and Management*, Vol.118, No. 1. Retrieved January 2010 from Compendex database.

Canty, Rothenstein & Avenhaus (2001). Timely Inspection and Deterrence. *European Journal of Operational Research* Vol. 131, No. 1, 16, pp. 208-223. Retrieved 2010 from Compendex database.

Carson, Dunlop & Associates (2008). *Principles of Home Inspection Systems and Standards*. Chicago, IL: Dearborn Home Inspections.

Carson, J. (1989). Verification and Validation: A Consultant's Perspective. *Proceedings of the 1989 Winter Simulation Conference.*

Cauldwell, R. (2001). *Inspecting a House.* Newtown, CT: The Taunton Press, Inc.

Chadwick, W.L. (1986) Impact of Design, Construction and Cost on Project Quality, *ASCE Journal of Professional Issues in Engineering,* Vol. 112, No. 2. pp. 69-79. Retrieved January, 2010 from Compendex database.

Chesterfield County Department of Building Inspection (2009). *Building Process - Everything You Ever Wanted to Know About the Building Process.* Chesterfield County, Virginia. Retrieved 2010 from www.chesterfield.gov/bi.

Cho, K., Schunn, C.D. & Charney, D. (2006). Commenting on Writing Typology and Perceived Helpfulness of Comments from Novice Peer Reviewers and Subject Matter Experts. *Written Communication,* Vol. 23, No. 3, pp. 260-294.

Chung, V., Wong, E. & Griffiths, S. (2007). Content Validity of the Integrative Medicine Attitude Questionnaire: Perspectives of a Hong Kong Chinese Expert Panel. *The Journal of Alternative and Complementary Medicine*, Vol. 13, No.5, pp. 563-569.

Clausen, Haughton, and Murphy. (2003). Evaluating Wood-Based Composites for Incipient Fungal Decay with the Immunodiagnostic Wood Decay Test Report FPL-GTR-142. Forest Products Lab., Madison, WI. Retrieved 2010 from http://www.fpl.fs.fed.us/documnts/fplgtr/fplgtr142.pdf.

Creswell, J.W., and Miller, D.L. (2000). Determining Validity in Qualitative Inquiry. *Theory Into Practice*, Vol. 39, No. 3. Retrieved April 2, 2010 from http://www.slis.indiana.edu/faculty/hrosenba/www/Research/methods/creswell_qual-valid.pdf.

Demaus, R. (1995). Structural Timber Testing. *Construction Repair*, 1995 Vol. 9, No. 2, pp. 23-27.

Dillman, D.A. (1978). *Mail and Telephone Surveys - The Total Design Method*. New York, NY: Wiley.

Drury, C.G. & Watson, J. (2002). *Good Practices in Visual Inspection*. Washington, DC: Federal Aviation Administration.

Dunsmore, A., Roper, M. & Wood, M. (2003). The Development and Evaluation of Three Diverse Techniques for Object-Oriented Code Inspection. *IEEE Transactions on Software Engineering*, Vol. 29, No. 8. Retrieved from Compendex database.

Ellingwood, B.R., Rosowsky, D.V., & Pang, W. (2008). Performance of Light-Frame Wood Residential Construction Subjected to Earthquakes in Regions of Moderate Seismicity. *Journal of Structural Engineering,* Vol. 134, No. 8. Retrieved January 5, 2010 from Compendex database.

EWPA (2010). *Product Definitions.* Retrieved 2010 from http://www.ewpa.com/definitions.php. Madison, WI: Engineered Wood Products Association.

Falk, R.H. & Moody, R.C. (1989*). Inspection and Evaluation of Wood Structures in North America.* Proceedings, Second Pacific Timber Engineering Conference, 1989 August 28-31: Auckland, NZ. Retrieved 2010 from http://www.fpl.fs.fed.us/documnts/pdf1989/falk89a.pdf.

Falk, R.H., & Ross, R.J. (1990). Methods for Assessing Wood Structures in Place. *Proceedings of the First Materials Engineering Congress, 1990 August 13 – 15*. Vol. 1, pp. 324-330. Denver, CO: New York: American Society of Civil Engineers. Retrieved 2010 from Compendex database.

Foliente, G.C., Leicester, R.H., Wang, C., Mackenzie, C. & Cole, I. (2002). Durability Design for Wood Construction. *Forest Products Journal*, Vol. 52, No.1. Retrieved 2010 from Compendex database.

Ford, D.N., & Sterman, J.D. (1997). Expert Knowledge Elicitation to Improve Mental and Formal Models. *System Dynamics Review,* Vol. 14, No. 4, pp. 309-340. Retrieved 2010 from http://jsterman.scripts.mit.edu/docs/Ford-1997-ExpertKnowledgeElicitation.pdf.

Freas, A. D. Y. (1982). *Evaluation, Maintenance and Upgrading of Wood Structures: A Guide and Commentary*. New York, N.Y: The American Society of Civil Engineers.

Fridley, K. J. (2002). Wood and Wood-Based Materials: Current Status and Future of a Structural Material. *Journal of Materials in Civil Engineering*, Vol. 14, No.2. Retrieved 2010 from Compendex database.

Georgia Pacific (2008). *Wood I-Beam Joists.* Atlanta, GA: Georgia-Pacific. Retrieved 2010 from http://www.gp.com/build/literature.aspx.

Georgia Pacific (2009). *Engineered Lumber Installation Guide GEO-tm Lit. Item #127520.* Atlanta, GA: Georgia-Pacific. Retrieved 2010 from http://www.gp.com/build/literature.aspx.

Georgiou, J., Love, P.E.D., & Smith, J. (1999). A comparison of Defects in Houses Constructed by Owners and Registered Builders in the Australian State of Victoria. *Structural Survey,* Vol. 17, No. 3, p.160. Retrieved 2010 from ProQuest database.

Girhammar, U.A. & Källsner, B. (2008). Analysis of Influence of Imperfections on Stiffness of Fully Anchored Light-Frame Timber Shear walls – Elastic Model. *Materials and Structures,* Vol. 43, pp. 321-337. Retrieved 2010 from http://www.springerlink.com/content/966847p07423xl27.

Graybeal, B.A., Phares, B. M., Rolander, D.D., Moore, M., & Washer, G. (2002). Visual Inspection of Highway Bridges. *Journal of Nondestructive Evaluation*, Vol. 21, No. 3. Retrieved from Compendex database.

Hancher, D.E. & Abd-Elkhalek, H.A. (1998). The Effect of Hot Weather on Construction Labor Productivity and Costs. *Cost Engineering*, Vol. 40, No. 4, p. 32. Retrieved from Compendex database.

Hansen, H., (1988). The Inspection of Structural Wood Systems. *Common Bond,* Vol. 4, pp.4-7.

Haynes, N.S. & Love, P.E.D., (2003). Psychological Adjustment and Coping among Construction Project Managers. *Construction Management and Economics* (February 2004) Vol. 22, pp. 129–140. Retrieved from Compendex database.

Henderson, M., (2006). Construction Defects: A Look at a Problem that Won't Go Away. *American Agent & Broker.* Vol. 78, No. 1, p. 36. Retrieved 2010 from http://news-business.vlex.com/vid/construction-defects-look-problem-away-63501191.

Holloway, I. (1997). *Basic Concepts for Qualitative Research.* Oxford: Blackwell Science Ltd.

HomeGauge (2010). *HomeGauge Version 4 Inspection Reporting Software.* Asheville, NC: SHGI Corporation.

Horvat, M., & Fazio, P., (2003). Performance Evaluation for Full-Scale Wood-Frame Building Envelopes. *Architectural Engineering 2003 Building Integration Solutions Proceedings of the Architectural Engineering 2003 Conference,* pp. 236-239. Retrieved 2010 from Compendex database.

Huber (No date given – current as of download date 6-1-2011). *AdvanTech Installation Instructions*. Charlotte, NC: Huber Engineered Woods. Retrieved June 1, 2011 from http://www.advantechperforms.com/technical-information/installation-guides.aspx.

HUD (2002). *The U.S. Department of Housing and Urban Development Office of Public and Indian Housing. Inspection Form. Form HUD-52580-A.* US Department of Housing and Urban Development. Washington, DC: HUD. Retrieved 2010 from http://portal.hud.gov/portal/page/portal/HUD.

ICC (2004). *CP# 12-03 ICC Standards Development* (2004). Washington DC: International Code Council. Retrieved March 2, 2010 from http://www.iccsafe.org.

ICC (2005a). *CP# 28-05 Code Development* (2005). Washington DC: International Code Council. Retrieved March 2, 2010 from http://www.iccsafe.org/Pages/default.aspx.

ICC (2005b). *ICC Consensus Procedures ANSI Approved July 2005.* Washington DC: International Code Council. Retrieved March 2, 2010 from http://www.iccsafe.org/Pages/default.aspx.

ICC (2010a). *International Residential Code for One- and Two- Family Dwellings Code and Commentary.* Washington, DC: International Code Council.

ICC (2010b). *International Building Code.* Washington, DC: International Code Council.

ICC ES (2010). *What's In an ICC-ES Evaluation Report?* Whittier California: International Code Council Evaluation Service. Retrieved 2010 from http://www.icc-es.org/Evaluation_Reports/read.shtml.

iLevel (2010a). *TJ-4000 Specifier's Guide TJI 110, TJI 210, TJI 230, TJI 360, and TJI 560 Joists.* Boise ID: Weyerhaeuser NR Company. Retrieved 2010 from http://www.ilevel.com/literature/TJ-4000.pdf.

iLevel (2010b). *TJ-9000 Specifier's Guide Beams, Headers, and Columns.* Boise ID: Weyerhaeuser NR Company. Retrieved July 15, 2011 from http://www.ilevel.com/literature/TJ-9000.pdf.

iLevel (2011). *TJ-9001 Structural Framer's Pocket Guide.* Boise ID: Weyerhaeuser NR Company. Retrieved July 15, 2011 from http://www.ilevel.com/literature/TJ-9001.pdf.

Ilozor, B.D., Okoroh, M.I., Egbu, C.E., & Archicentre (2004). Understanding Residential House Defects in Australia from the State of Victoria. *Building and Environment,* Vol. 39, pp. 327-337. Retrieved 2010 from Compendex database.

Jager (No date). *JSI User Guide*. Calgary, Alberta Canada: Jager Engineered Wood Products. Retrieved 2010 from http://www.jagerewp.com/pdf/10-0225%20JSI%20User%20Guide_LSD.pdf.

Josephson, P.-E. & Hammarlund, Y. (1999). The Causes and Costs of Defects in Construction: A Study of Seven Building Projects. *Automation in Construction*, Vol.8, No. 6, pp. 681-687. Retrieved 2010 from Compendex database.

Kent, R. A. (2001). *Data Construction and Data Analysis for Survey Research*. Chippenham, Wiltshire, UK: PALGRAVE.

Kim, K. & Paulson, B.C. (2003). Agent-Based Compensatory Negotiation Methodology to Facilitate Distributed Coordination of Project Schedule Changes. *Journal of Computing in Civil Engineering*, Vol. 17, No. 1. Retrieved 2010 from Compendex database.

Kuprenas, J.A. (2008). Influence of Quality on Construction Costs. *AACE International Transactions*, Morgantown: 2008. p. CS51. Retrieved 2010 from ProQuest database.

Law, A.M. & Kelton, W.D. (1982). *Simulation Modeling and Analysis.* New York, NY, McGraw-Hill.

Lebeda, D.J., Gupta, R., Rosowsky, D.V. & Dolan, D. (2005). Effect of Hold-down Misplacement on Strength and Stiffness of Wood Shear Walls. *Practice Periodical on Structural Design and Construction*, Vol. 10, No. 2. Retrieved from Compendex database.

Lincoln, Y.S. & Guba, E. (1985). *Naturalistic Inquiry.* Newbury Park, CA: Sage Publications, Inc.

Louisiana Pacific (2008). *LP Solid Start Engineered Wood Products LPE W0124 15mM MW.* Nashville, TN: Louisiana-Pacific. Retrieved 2010 from http://www.lpcorp.com/resources/literature/.

Louisiana Pacific (2010). *LP Solid Start Engineered Wood Products LPE W0124 15mM MW.* Nashville, TN: Louisiana-Pacific. Retrieved 2010 from http://www.lpcorp.com/resources/literature/.

Love, P. (2002). Influence of Project Type and Procurement Method of Rework Costs in Building Construction Projects. *Journal of Construction Engineering and Management,* Vol. 128, No. 1, pp. 18 – 29. Retrieved from Compendex database.

Maxwell, J.A. (2005). *Qualitative Research Design – An Interactive Approach*. *Applied Social Research Methods Series, Vol. 42.* Thousand Oaks, CA: Sage Publications, Inc.

Mills, A., Love, P.E.D., & Williams, P. (2009). Defect Costs in Residential Construction. *Journal of Construction Engineering and Management*, Vol. 135, No. 1. Retrieved January 11, 2010 from Compendex database.

Merriam Webster's Online Dictionary (2011). Merriam-Webster, Incorporated. http://www.merriam-webster.com/.

Moore, M., Phares, B., Graybeal, B., Rolander, D. & Washer, G. (2000). *FHWA-RD-01-020 Reliability of Visual Inspection for Highway Bridges Volume I: Final Report.* McLean, VA: NDE Validation Center.

Morse-Fortier, L.J. (2008). Problems with the Partially Engineered House. *Structures 2008: Crossing Borders*. Structures Congress Vancouver, British Columbia, Canada. Vol. 314. Retrieved from Compendex database.

NAHB (2008). *Wood Products Used in Residential Construction.* Upper Marlboro, MD: National Association of Home Builders Research Center.

NAVFAC (1985). *Inspection of Wood Beams & Trusses NAVFAC MO-111.1* September 1985. Alexandria, VA: Naval Facilities Engineering Command. Retrieved 2010 from http://www.wbdg.org/ccb/NAVFAC/OPER/mo111_1.pdf.

Nelson, S. (1997). Structural Composite Lumber. In S. Smulski (Ed.), Engineered *Wood Products - A Guide for Specifiers, Designers, and Users.* pp. 6-147 – 6-172. Madison, WI: PFS Research Foundation.

Neumeister, D.E. (2006). Coverage and Bad Faith Aspects of Construction Defect Litigation. *Federation of Defense & Corporate Counsel (FDCC) Quarterly*, Fall 2006. Vol. 57. No. 1, p. 61. Retrieved 2010 from http://www.thefederation.org/documents/V57N1-Neumeister.pdf.

Nordic (2009). *Nordic Joist N-U101.* Montreal Quebec Canada: Nordic Engineered Wood. Retrieved 2010 from http://nordicewp.com/literatures/N-U101_Construction_Guide_Apr_2009.pdf.

OSHA (1998). *Fall Protection in Construction.* Washington, DC: Occupational Safety and Health Administration, US Department of Labor. Retrieved 2010 from http://www.osha.gov/Publications/3146.html.

OSHA (2009). *Field Operations Manual.* Washington, DC: Occupational Safety and Health Administration, US Department of Labor.

PATH/NAHB (2003). *Making the Quality Connection: Improving the Building Industry Insurance Situation Through Quality Assurance Programs.* Washington, DC: Partnership for Advancing Technology in Housing. Retrieved 2010 from http://www.huduser.org/Publications/pdf/qualityconnection.pdf.

Patton, M.Q. (1980). *Qualitative Evaluation Methods.* Beverly Hills, CA: Sage Publications, Inc.

Patton, M.Q. (2002). *Qualitative Research and Evaluation Methods.* Thousand Oaks, CA: Sage Publications, Inc.

Phares, B.M, Rolander, D.D., Graybeal, B.A., & Washer, G.A. (2000). Studying the Reliability of Bridge Inspection. *Public Roads,* Vol. 64, No.3. Retrieved 2010 from http://www.fhwa.dot.gov/publications/publicroads/00nov/bridge.cfm.

Powell, K.L., Tilotta, D.C., & Martinson, K.L., (2008). Assessment of Research and Technology Transfer Needs for Wood-Frame Housing. *General Technical Report FPL-GTR-176.* Madison, WI: U.S. Department of Agriculture. Forest Service, Forest Products Laboratory. Retrieved 2011 from http://www.fpl.fs.fed.us/documnts/fplgtr/fpl_gtr176.pdf.

Rajendran, S. & Gambetese, J.A. (2009). Development and Initial Validation of Sustainable Construction Safety and Health Rating System. *Journal of Construction Engineering and Management,* Vol. 135, No. 10. Retrieved June 2, 2011 from http://ascelibrary.org/coo/resource/1/jcemd4/v135/i10/p1067_s1.

Ratcliffe, J.W. (1983). Notions of Validity in Qualitative Research Methodology. *Knowledge: Creation, Diffusion, Utilization*. Vol. 5, No. 2, pp. 147-167. Retrieved June 26, 2011 from http://scx.sagepub.com/content/5/2/147.short.

Readling, B. (2008). Framing Red Flags. *Journal of Light Construction*, July 2008. Retrieved 2010 from http://www.jlconline.com/.

Reason, J. (1990). *Human Error*, Cambridge University Press.

Rosowsky, D.V. & Ellington, B.R. (2002). Performance-Based Engineering of Wood Frame Housing: Fragility Analysis Methodology. *Journal of Structural Engineering,* Vol. 128. Retrieved 2010 from Compendex database.

Ross, R. J., Brashaw, B. K., & Wang, X., (2006). Structural Condition Assessment of In-Service Wood. *Forest Products Journal,* Vol. 56, No. 6. Retrieved 2010 from Compendex database.

Ross, Brashaw, Wang, White, & Pellerin (2004). *Wood and Timber Condition Assemith ssment Manual*. Madison, WI: Forest Products Society. Retrieved 2010 from Compendex database.

Sacks, R. & Harel, M. (2006). An Economic Game Theory Model of Subcontractor Resource Allocation Behaviour. *Construction Management and Economics*, August 2006, Vol. 24, pp. 869 – 881. Retrieved 2010 from Compendex database.

Sawhney, A., Bashford, H., Palaniappan, S., Walsh, K., & Thompson, J. (2005). A Discrete Event Simulation Model to Analyze the Residential Construction Inspection Process. *Computing in Civil Engineering, Proceedings of the 2005 International Conference, July 12-15, 2005, Cancun, Mexico.* pp. 1415-1425. Retrieved 2010 from Compendex database.

Sawhney, A., Walsh, K.D., Bashford, H.H., & Palaniappan, S. (2009). Impact of Inspected Buffers on Production Parameters of Construction Processes. *Journal of Construction Engineering and Management*, Vol.135, No. 4. Retrieved January 11, 2010 from Compendex database.

Scheaffer, R.L., Mendenhall, W., & Ott, R.L. (2006). *Elementary Survey Sampling*, Sixth edition. Belmont CA, Duxbury.

Scheuren, F. (2004). *What is a Survey?* Retrieved 2010 from http://www.amstat.org/sections/srms/pamphlet.pdf.

Schierle, G.G. (1996). Quality Control in Seismic Design and Construction. *Journal of Performance of Constructed Facilities*, Vol. 10, No. 3. Retrieved 2010 from Compendex database.

Schwandt, T.A. (1997). Dictionary of *Qualitative Inquiry Second edition.* Thousand Oaks, CA: Sage.

Sepulveda, A.R., Kyriacou, O. & Treasure, J. (2009). Development and Validation of the Accommodation and Enabling Scale for Eating Disorders (AESED) for Caregivers in Eating Disorders. *BMC Health Services Research* 2009, Vol. 9, p.171. Retrieved 2010 from http://www.biomedcentral.com/1472-6963/9/171.

Simpson Strong Tie (2009). *Connector Selection Guide for Use with Products Manufactured by Boise Cascade Engineered Wood Products CSG-BC09 5/09.* Pleasanton, CA: Simpson Strong-Tie Company. Retrieved 2010 from http://www.strongtie.com/ftp/csg/CSG-BC09.pdf.

Simpson Strong Tie (2009a). *Connector Selection Guide for Use with Products Manufactured by LP Building Products* CSG-LP09 4/09. Pleasanton, CA: Simpson Strong-Tie Company. Retrieved 2010 from http://www.strongtie.com/ftp/csg/CSG-LP09.pdf.

Skulmoski, G.J., Hartman, F.T., & Krahn, J. (2007). The Delphi Method for Graduate Research. *Journal of Information Technology Education*, Vol. 6. Retrieved June 20, 2011 from Compendex database.

Smith, D. (2007). Construction Defect Class Actions: Where do the Potential Risks Lie? *Construction Accounting & Taxation*, Vol. 17, No.1, p. 15.

Spada, M.D. (2008). *The Home Inspection Book - A Guide for Professionals*. Mason, OH: Cengage Learning.

SSC (Ship Structural Committee) (1990) - An Interagency Advisory Committee Dedicated to the Improvement of Marine Structures. *Guide for Ship Structural Inspection SSC – 332.* Washington, DC: U.S. Coast Guard. New York, New York: American National Standards Institute. Retrieved 2010 from http://www.dtic.mil/dtic/tr/fulltext/u2/a226972.pdf.

Suaris, W., & Khan, M.S. (1995). Residential Construction Failures Caused by Hurricane Andrew. *Journal of Performance of Constructed Facilities,* Vol. 9, No. 1. Retrieved 2010 from Compendex database.

Thomas, H. R., Riley, D.R., & Sanvido, V.E., (1999). Loss of Labor Productivity Due to Delivery Methods and Weather. *Journal of Construction Engineering and Management* January/February 1999. Retrieved 2010 from Compendex database.

Trochim, W.M.K. (2006). *Purposive Sampling.* Research Methods Knowledge Base. New York, NY. Retrieved 2011 from http://www.socialresearchmethods.net/.

USDA APHIS. (2009). VHSV Expert Panel and Working Group Viral Hemorrhagic Septicemia Virus (VHSV IVb) Risk Factors and Association Measures Derived by Expert Panel. *Preventive Veterinary Medicine*, Vol. 94 (2010), pp. 128–139. Retrieved 2011 from Compendex database.

USP (2007). *EWP Product Guide for Use With Products Manufactured by Louisiana Pacific Building Products USP972-071.* Burnsville, MN: United Steel Products Company. Retrieved 2010 from http://www.uspconnectors.com/pdfs/lpguide.pdf.

Van Note, S. A. (2010). *Building Code Basics: Residential Based on the 2009 International Residential Code.* Copyright 2010 International Code Council. Clifton Park, NJ: Delmar, Cengage Learning.

Washer, G., Moore, M. & Walther, R. (1999). FHWA Approach for Reliability Testing of the Visual Inspection Method. *Structures Congress – Proceedings,* pp.829-832. Retrieved 201 from Compendex database.

Welsh, R. (1991). Elements of an Effective Inspection Program. *Preparing for Construction in the 21st Century Proceedings of Construction Congress 1991.* pp. 524-530. Retrieved 2010 from Compendex database.

Wynekoop, J.L., & Walz, D.B. (2000). Investigating Traits of Top Performing Software Developers. *Information Technology & People*, Vol. 13, No. 3, pp. 186-195. Retrieved August, 2010 from http://www.emerald-library.com/search.htm?PHPSESSID=ae83kcf99iulidlune4m0rdlf6&st1=Investigating+Traits+of+Top+Performing+Software+Developers&ct=all&ec=1&bf=1&go=Go.

Yeung, J.F.Y., Chan, A.P.C., & Chan, D.W.M. (2009). Developing a Performance Index for Relationship-Based Construction Projects in Australia: Delphi Study. *Journal of Management in Engineering,* Vol. 25, No. 2. Retrieved June 4, 2011 from Compendex database.

Appendix A: Researcher Statement of Potential Bias

Maxwell (2005) addressed the concept of the role of the researcher in qualitative research, which was discussed in section 2.9.7. An important aspect of addressing potential bias is that the researcher should disclose his biases that might apply to the research. This section describes opinions of the researcher that some may consider to be biases.

The author meets all the pre-determined criteria as a home inspection subject matter expert, except that he initiated the project and was therefore not nominated by his peers to participate. He has no experience in the code enforcement field, nor has any experience as an employee of a manufacturer. His experiences figured prominently in the perceived need for this research, in the development of the initial methodology, software, survey questions, and in the type of information sought.

A – 1 Observations on the Home Inspection Industry.

Having entered the home inspection profession in the mid 1980's, the author watched the industry slowly develop into a recognized profession. Because there was no formal home inspection training programs at that time, the author learned inspecting on-the-job under a mentor, who himself had learned under a mentor. This was an excellent way to learn how to inspect, but it failed to cover many types of inspection issues that were not discovered during the field training. Every inspector has to have at least two skill sets. The first is a minimum level of specific knowledge of housing, and the second is the ability to apply it in the field. Today, inspectors have many opportunities to enhance

their knowledge through training and continuing education, but perhaps not as much opportunity to learn applied inspecting techniques as when on-the-job was the only method available to learn inspecting.

In the 1980's, no one in the inspection industry anticipated the rate at which new building materials and practices would be introduced. There was a sense that humankind had been building wooden structures for thousands of years, and the products used were well understood. Plywood had been invented in 1905 and was among the first engineered wood products (EWP). People resisted the idea that plywood could be an improvement over dimension lumber for structural sheathing, and it took many years for it to gain acceptance as a structural material. Even into the 1980's, people tended to view it with suspicion. This set the pattern for the introduction and adoption of subsequent generations of engineered wood products, albeit with a decreasing time period between new product introduction and acceptance as a legitimate construction material.

Apart from the psychological acceptance of the new products was the issue of proper installation. The construction industry has been slow to recognize that EWPs require different construction methods than traditional dimension lumber. Prescriptive building codes do not contain specifics on installation for each proprietary manufactured product, but do incorporate by reference the manufacturers' recommendations into the code.

The extent of knowledge necessary to construct and inspect a house using engineered wood products and other proprietary manufactured products has expanded beyond the capacity of any single individual to master. Published building codes are merely the

starting point for determining proper manufactured product installation uses and techniques. This writer believes that home inspections, whether public or private, are extremely important to the home buying public, and should be considered in public policy discussions regarding the protection of the occupants of real properties.

A – 2 Builders and Installers.

Another issue involves builders and installers. Even in jurisdictions where building codes have been adopted and enforced, there is usually no requirement for licensure or training for carpenters and their helpers. Although carpenters create most instances of non-compliant work as determined by the survey experts, they are not the only persons responsible for EWP non-compliance. Other trades (that do require licensing) such as electricians, heating air conditioning & ventilation technicians, and plumbers, may cause damage to structural members, even though their codes include warnings about improperly modifying EWPs. Further, the author believes that in general, the construction industry has not taken adequate steps to proactively address this issue.

A – 3 Project Justification.

Timber engineers and the wood science community have long recognized the consequences to a wooden structure resulting from damage inflicted by termites and wood-destroying fungi. There has been a concentrated and generally successful effort to develop tools to discover and evaluate decreases in the capacity of wood members due to these factors, and an abundance of literature to document the methods and techniques to do so. However, it appears that there has been little recognition of the fact that structural deficiencies can, and are, built into the structure from the very

beginning in spite of existing inspections. Many of these deficiencies are detectable and are far easier to correct at the pre-drywall stage before they are after concealment by insulation and surface finish materials.

This writer believes that providing a readily usable reference of the most important manufacturer specifications and systematizing the inspection process using proven inspection methods can significantly reduce the incidence of undiscovered defects, thus improving code compliance and housing safety for the general public. He further believes that this research project merely scratches the surface of this line of inquiry, and that future research is needed to more fully understand the extent of the problem.

A – 4 Purchasing a New Home.

In his own inspection practice, the author assumes that every house has defects in it, even before seeing the property. The real inspection question is not whether problems exist - rather, it is how many of them will be found. He believes that many of the problems discovered during home inspections are not acted upon by home buyers. This creates the potential for unexpected repair expenses in the future, and a possible diminution of the value of the collateral that mortgage lenders rely on. Lenders rely on real estate appraisers, who are not home inspectors, though some are required to estimate the condition and expected remaining life of certain housing components. The results of home inspections are confidential and are not made public in any way. Thus, lenders may have no knowledge of risk factors for a given property that the home buyers are willing to accept, but which may affect the integrity of the mortgage collateral.

Buying a new house is not like buying a new automobile. A new car is assumed to be at its peak of perfection. Very few buyers of new homes even consider the need to inspect new construction. They tend to forget that unlike brand new automobiles, homes are manufactured under exposed exterior conditions by dozens of different trades with little communication between them, and with relatively little quality control oversight.

The author believes more needs to be done to inform new home buyers and real estate sales professionals of the importance of pre-sale inspections. It was surprising and revealing to discover that the local chapters of the American Society of Home inspectors serving two of the largest population centers in Virginia were unable to nominate members who met the expert criteria as specified in this project for pre-drywall inspectors. By way of reasoning, they noted that there is no demand for this type of inspection. The author does not believe this is because there are no problems to discover.

Some jurisdictions mandate a time period during which the builder is responsible for correcting framing deficiencies during which time manifest themselves. The owner of the property is responsible for correcting deficiencies that do not appear during the warranty period. It is possible that defects will not become apparent until the structure experiences adverse loading conditions such as from high winds, seismic action, or other environmental stresses, and these events may not occur during the warranty coverage period. It should be noted that in some jurisdictions the individual who inspects a home can be held liable for his inspection for a much longer time period than the builder is held liable for construction errors built into the house. In the author's view,

this warrants the need for further political discussions of public policy to protect the home buying public.

A – 5 Pre-Drywall Inspections.

Conducting pre-drywall inspections is very different from conducting the more common resale home inspections. Framing inspections require knowledge and skills not normally needed in the inspection of existing homes. Therefore, not every home inspector chooses to develop these skills. This author believes there are relatively few private inspectors who have actively sought to develop the knowledge and skills required to perform pre-drywall inspections, and that many home inspectors who perform pre-drywall inspections do not possess adequate skills to do so.

In new construction, it sometimes happens that non-compliant installation problems are be discovered after the code inspection was completed and approvals issued. This does not mean that these problems are not true problems, nor does it necessarily mean that the code officials evaluated the problem areas in question and approved them. The problems are still concerns that need to be properly addressed. Building codes address this concern and grant authority to building code officials to revoke previously issued approvals, and if needed, to issue stop work orders.

This inspector has seen many occasions when builders have refused to correct problems found after code inspections by stating that the house has already passed the code inspection, so the home inspector did not know what he or she was talking about, or the newly reported problems either are not problems at all, or they were approved by the code officials. Homebuyers, not being experts in this field, may believe this

fallacious reasoning, and accept the property with the identified problems based on these assurances. However, a proper inspection report does provide written and photographic documentation that the observed deficiencies were present prior to the purchaser taking ownership of the property.

A – 6 Engineered Wood Products.

This writer believes that engineered wood products are necessary for the future of the residential housing industry in the US. This is due to the enhanced properties and sustainability over sawn lumber and over any other alternative framing materials available today. The intent in pursuing this project was therefore not to find fault with these products, but to encourage their proper use. Rather than anticipating new developments in the realm of EWPs, this project looks at how existing EWPs are used. As future products are developed and implemented in new construction, the knowledge required to install and inspect them will continue to increase. By establishing the importance of this topic and by developing a methodology for continuing to update the state of the art in EWP inspecting, the author believes the incidence of installation problems can be decreased even as new information is required.

A – 7 Research Methods, Discussion, and Conclusions.

The research methods used in this project are qualitative. The author believes the handling and interpretation of the information provided by the subject matter experts has been responsible. To the best of his ability and belief, the process has maintained the integrity of the information as a matter of personal principle, and because of the ongoing feedback from the expert respondents at each stage. He therefore presents this

material as being as providing strong evidence of validity as determined by the subject matter experts opinion of the process and outcomes based on the concept of high face validity.

Appendix B: Participant Consent Form

Participant Consent Form

I. Title of this Research Project

Methodology for the Visual Inspection of Selected Engineered Wood Components and Hanger Hardware for Prescriptive Non-Compliance at the Pre-Drywall Stage of Residential Construction

II. Purpose of this Research Project

The goal of this project is to develop and validate a visual inspection methodology, associated knowledge base, and software application for detecting prescriptively non-compliant installation issues involving selected engineered wood components (EWC) and hanger hardware. The validity of this project is based on the experiences and inputs of subject matter experts. There will be three home inspector participants and three building code official participants, with one alternate for each group.

We are particularly interested in your expert input regarding the following six categories:

1) Identifying types of building materials and EWC brands in common use in your area.

2) Identifying high-risk aspects and/or common prescriptive non-compliance issues associated with the selected EWCs.

3) Identifying specific methods you recommend for the inspection of EWCs.

4) Validation of the project development process and final outputs.

5) Attitudes and opinions about EWCs versus dimension lumber, about builders, and suggestions for any other aspects of residential EWC inspection, etc. that you think should be the subject of future research.

6) Refine a flowchart model of the inspection process.

III. Sponsorship and Funding

This research project is entirely independent of any sponsors outside of Virginia Tech, and utilizes no sources of funding beyond the investigator's personal resources and the University. Specific persons and entities providing financial support for this research include John Bouldin's research assistantship under Dr. Joseph Loferski, the

Wood Science and Forest Products Department of the Virginia Tech College of Natural Resources and Environment, and the Virginia Tech Graduate School. The investigators and the project have no other arrangement with any outside corporation, governmental agency, or any other entity.

Virginia Tech Institutional Review Board: Project No. 10-371
Approved July 21, 2010 to July 20, 2011

IV. Research Intended for Dissertation and Publication

This research is being conducted in partial fulfillment of the requirements for the Doctor of Philosophy degree for John Bouldin. The research findings are intended for publication and/or distribution in appropriate academic journals, trade magazines, and selected online venues. Future uses of this material may involve financial compensation to John Bouldin.

V. Procedures

This project will ask that you make yourself available for at least two personal interviews during which the investigator will administer a survey instrument designed to elicit your expert knowledge and to solicit your input on the appropriateness of the methodology, the development process and the software application. The researcher will make every effort to accommodate the needs of each participant in scheduling, including travelling to the respondent's place of business or other agreed upon location. Each of the two interviews is expected to last about two hours. More or less time may be needed in each individual situation.

The inputs of each participant will be tracked separately, and participant feedback will be solicited to insure that each suggestion is properly incorporated into the methodology. In the event that conflicting SME responses arise that may affect the outcome or validation of the project, the researcher will make every effort to resolve the conflict between participants without disclosing the identity of the other party. Therefore, periodic email and phone communications may be needed at irregular intervals throughout the project, especially if you wish to amend or update any information provided. The interview and development process is targeted for completion around August, 2010.

VI. Risks

There are no known or anticipated risks to the participants beyond those involved in the carrying out of the participants' normal job-related responsibilities.

VII. Benefits

You are helping to stake out new territory in the synergistic effects that academic research combined with practical field inspection experience can produce. We hope to

apply your contributions to improve detection of EWC prescriptive non-compliance at the pre-drywall stage of new residential construction. It is also thought that your contributions may enhance the perception of the profession of residential inspecting, attract more academic research to the field, and promote the unique importance that inspection professionals provide to society.

Virginia Tech Institutional Review Board: Project No. 10-371
Approved July 21, 2010 to July 20, 2011

VIII. Extent of Anonymity and Confidentiality

Due to the fact that participants will be nominated by their peers, the identities of some participants may be known to parties outside of and prior to this research project. The identity of each participant's responses, however, will be kept in strict confidence. No persons beyond the members of the research team will have access to the alphanumeric key that identifies each participant's responses. A written research log will be maintained along with the survey/interview responses in a secure location for a period of at least three years. It is possible that the Virginia Tech Institutional Review Board (IRB) may view this study's collected data for auditing purposes. Uses of the study results will contain references to aggregated data and opinions of the two inspector groups, and of the entire group.

IX. Compensation

Given the financial constraints of the project, no compensation for SME participation is available.

X. Freedom to Withdraw

Participants are free to withdraw from the study at any time, and are free to not answer any questions without penalty.

XI. Subject's Responsibilities and Project Terms

By agreeing to the provisions of this disclosure document, each participant warrants that it is both feasible and desirable to the participant to engage in this research throughout the life of the project to completion. Please keep in mind that this project is not intended to constitute an exhaustive and complete field-ready inspection methodology. It is a limited and developing methodology from which future research can broaden the scope. Future work may expand the system to encompass the full range of inspection issues that need to be addressed in real-world pre-drywall inspections. We recognize that inspecting for many important issues such as conventional framing non-compliance and improper electrical, plumbing, and mechanical installations are excluded from this project at this time. However, it is extremely important to discuss any deleterious impacts that the mechanical systems and installation methods may have on EWC framing.

1) Participant will provide interview responses to questions regarding their opinions on the inspection and construction-related issues that form the substance of this project, and on questions that may go beyond the practical aspects of the immediate research. This input may serve as the basis for future research projects.

Virginia Tech Institutional Review Board: Project No. 10-371
Approved July 21, 2010 to July 20, 2011

2) Participant will make every effort to cooperate and respond to requests in a timely manner, as the project is limited in duration and funding.

3) All code references used in this research should be from the *2006 International Residential Code* (IRC) rather than the 2006 Virginia USBC. This is to help interpretation of these results to be more broadly applicable outside the Commonwealth of Virginia.

4) In certain residences, the design services of a registered design professional (RDP) may be incorporated into portions of the framing structure, and these may involve departures from prescriptive specifications. For purposes of this project, we recognize that not all situations enable the field inspector to have access to any such engineering specifications. Therefore, please base your inputs on the assumption that the inspector has no access to building plans or special engineering information, and that the inspector must base his/her observations and documentation exclusively on visual inspection for compliance of the as-built system and components against the applicable prescriptive requirements.

5) Participant agrees to provide feedback on the methodology development process and the outputs of this research project. The validation process is subjective, and will be based on your feedback during the development stage of the methodology and upon your acceptance of the development process and the final outputs as being 'reasonable' and having 'high face validity'. This means that in your expert opinion the process and the outputs properly serve the purpose for which they were intended.

Virginia Tech Institutional Review Board: Project No. 10-371
Approved July 21, 2010 to July 20, 2011

XII. Subject's Permission

I have read the Consent Form and conditions of this project. I have had all my questions answered. I hereby acknowledge the above and give my voluntary consent:

Participant signature Date

Should I have any pertinent questions about this research or its conduct, about research subjects' rights, and whom to contact in the event of a research-related injury to the subject, I may contact:

John Bouldin, Investigator 703-200-7701; mailto:johnbouldin@vt.edu

Dr. Joseph Loferski, Faculty Advisor 540-321-4405; mailto:jlofersk@vt.edu

Dr. Audrey Zink-Sharp, Department Head 540-231-8820; mailto:agzink@vt.edu

David M. Moore 540-231- 4991; mailto:moored@vt.edu Chair, Virginia Tech Institutional Review Board for the Protection of Human Subjects Office of Research Compliance 2000 Kraft Drive, Suite 2000 (0497) Blacksburg, VA 24060

Virginia Tech Institutional Review Board: Project No. 10-371
Approved July 21, 2010 to July 20, 2011

Appendix C: Survey Questions for Both Interviews

First Interview Survey Instrument

1) What are the most common brands of **I-joists** used in your area?

_____

_____

2) What are the most common areas of prescriptive non-compliance with I-joists?

_____

_____

3) What methods do you use/recommend to discover I-joist prescriptively non-compliant installation problems?

_____

_____

4) What are the most common brands of **LVLs and PSLs** used in your area?

_____

_____

5) What are the most common areas of prescriptive non-compliance with LVLs and PSLs?

_____

_____

6) What methods do you use/recommend to inspect LVLs and PSLs?

_____

_____

7) What are the most common types of engineered rimjoists used in your area (LVL, I-joist, LSL, etc.)?

_____

_____

8) What are the most common brands of engineered rimjoists used in your area (LVL, I-joist, LSL, etc.)?

_____

_____

9) What are the most common areas of prescriptive non-compliance with engineered rimjoists?

_____

_____

10) What methods do you use/recommend to inspect engineered rimjoists?

_____

_____

11) What are the most common brands of OSB wall and roof sheathing used in your area?

_____

_____

12) What are the most common areas of prescriptive non-compliance with OSB wall and roof sheathing?

_____

_____

13) What methods do you use/recommend to inspect OSB wall and roof sheathing?

_____

_____

14) What are the most common brands of OSB subflooring used in your area?

_____

_____

15) What are the most common areas of prescriptive non-compliance with OSB subflooring?

_____

_____

16) What methods do you use/recommend to inspect OSB subflooring?

_____

_____

17) What are the most common brands of EWP hanger hardware used in your area?

_____

_____

18) What are the most common areas of prescriptive non-compliance with EWP hanger hardware?

_____

_____

19) What methods do you use/recommend to inspect EWP hanger hardware?

_____

_____

20) What are the most common areas of prescriptive non-compliance with MPCWTs?

_____

_____

21) What methods do you use/recommend to inspect MPCWTs?

_____

_____

22) Do you use or recommend a specific **inspection plan**? (Please refer to the flowchart below.)

Yes No Don't Know N/A

Please explain: _____

a) If so, what inspection plan strategy do you recommend?

Please explain: _____

_____

_____

_____

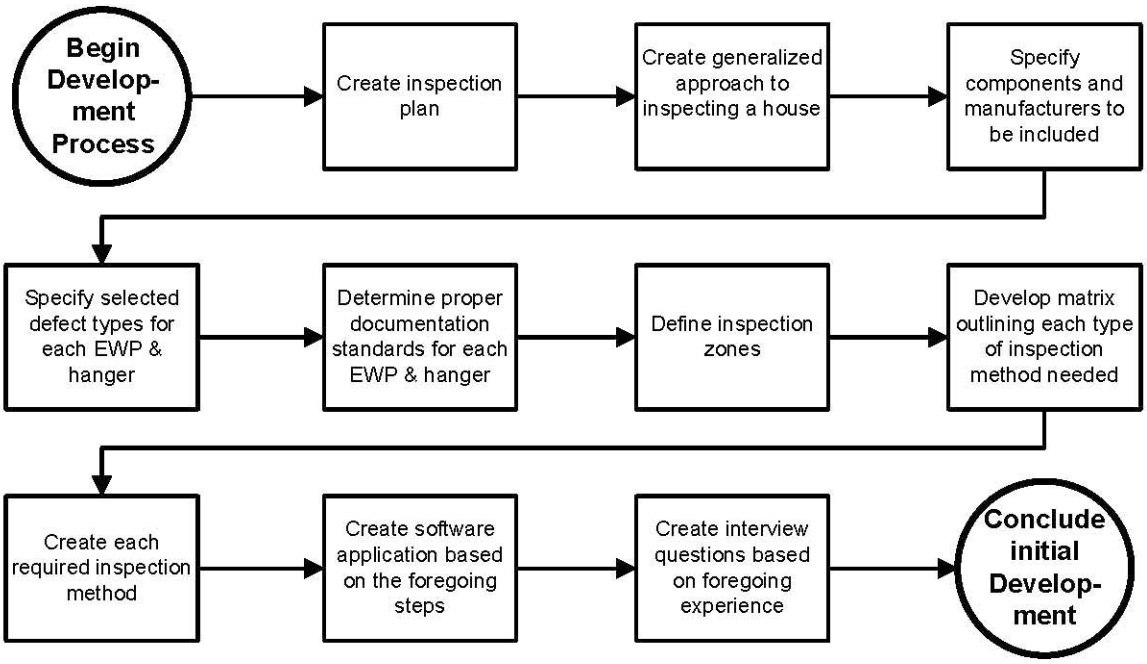

23) Do you recommend dividing the inspection into **separate zones** (such as roof, attic, interior, crawlspace, basement, or vertical sections)?

Yes No Don't Know N/A

Please explain: _____

a) If so, what inspection zoning strategy do you recommend?

Please explain: _____
_____
_____

b) If so, what inspection methods do you recommend for each zone?

Please explain: _____
_____
_____
_____

24) What inspection standards do you work under, if any?

_____
_____

25) Do you use different inspection methods for pre-drywall inspections based on weather conditions such as extreme heat, humidity, wind, or cold?

Yes No

Please explain: _____

26) When performing a pre-drywall framing inspection, **do you work under a time limitation?**

Yes No No Opinion Don't Know N/A

If yes, how long? _____

a) If yes, do you believe the allotted time is sufficient?

Yes No No Opinion Don't Know N/A

Please explain: _____

b) How much time do you believe is necessary to do a thorough pre-drywall inspection?

Time per inspection in minutes

c) ≤ 20…..21 - 30…..31 – 60 (one hour)…..61- 120 (two hours)…..121 – 180 (three hours)…..181 – 240 (four hours)….. 241+

Please explain: _____

d) Who determines the length of the time limitation?

Please explain: _____

e) On what basis is the time limitation determined?

Please explain: _____

f) Do you believe there is a relationship between the amount of time spent on an inspection and the number of non-compliant issues discovered?

Yes No No Opinion Don't Know N/A

Please explain: _____

27) When performing a pre-drywall framing inspection, do you begin with an assumption about whether some framing defects exist?

Yes No No Opinion Don't Know N/A

If yes, what assumption? _____

Please explain: _____

28) When performing a pre-drywall framing inspection, from what distance do you recommend the inspected framing member be viewed?

Distance in Feet

0…..5…..10….15…..20…..25.....30…..35…..40…..45…..50+

No Opinion Don't Know N/A

Please explain: _____

a) When and where is it appropriate to use binoculars, if any?

Please explain: _____

_____

29) What inspection tools do you recommend, if any (flashlight, ladder, tape measure, binoculars, level, etc.)?

No Opinion Don't Know N/A

Please explain: _____

_____

30) What reference materials or source documentation do you consider necessary for inspecting EWPs?

_____

_____

31) How important do you believe inspector enthusiasm for the inspection process is?

Low Importance High Importance

1…..2…..3…..4…..5…..6…..7…..8…..9…..10 No Opinion Don't Know N/A

Please explain: _____

32) If you were to build your own personal residence at this time, would you prefer to use engineered wood components, solid sawn components, or some combination of components for the structural framing?

Please explain: _____

_____

33) Please review the following inspection methods table. It is designed to determine what types of individual inspection methods are needed based on the level of the house (or other inspection zone) and the type of EWC. Please make suggestions for corrections on the table as you see fit. Please comment on your suggestions below.

Please explain:_____

_____

_____

_____

_____

_____

_____

Component Types →	I-Joists		Beams	Columns	Rimjoist		OSB Sheathing			MPCW Trusses		Hangers	
Uses →	Roof	Floor			Solid	I-Joist	Wall	Roof	Floor	Roof	Floor	Top Strap	Face
Inspection Zones↓	Inspection Methods												
Rooftop								OR - 1					
Attic	IR - 1		B - 1	C - 1	Ris - 1	Rii - 1	OW - 1	OR - 2	OF - 1	MR - 1		HT - 1	HFa - 1
Top Level	IR - 2									MR - 2			
Other Living Levels		IF - 1							OF - 2		MF - 1		
Basement / Crawlspace													
Exterior					Ris - 2	Rii - 2	OW - 2	OR - 3					

Can any of these individual inspection methods be eliminated or consolidated with others?

Please explain:_____

_____

_____

_____

34) Please review the following code inspection process flowchart and make suggestions for corrections on the flowchart as you see fit. Please comment on your suggestions below.

Please explain:_____

_____

_____

_____

_____

_____

_____

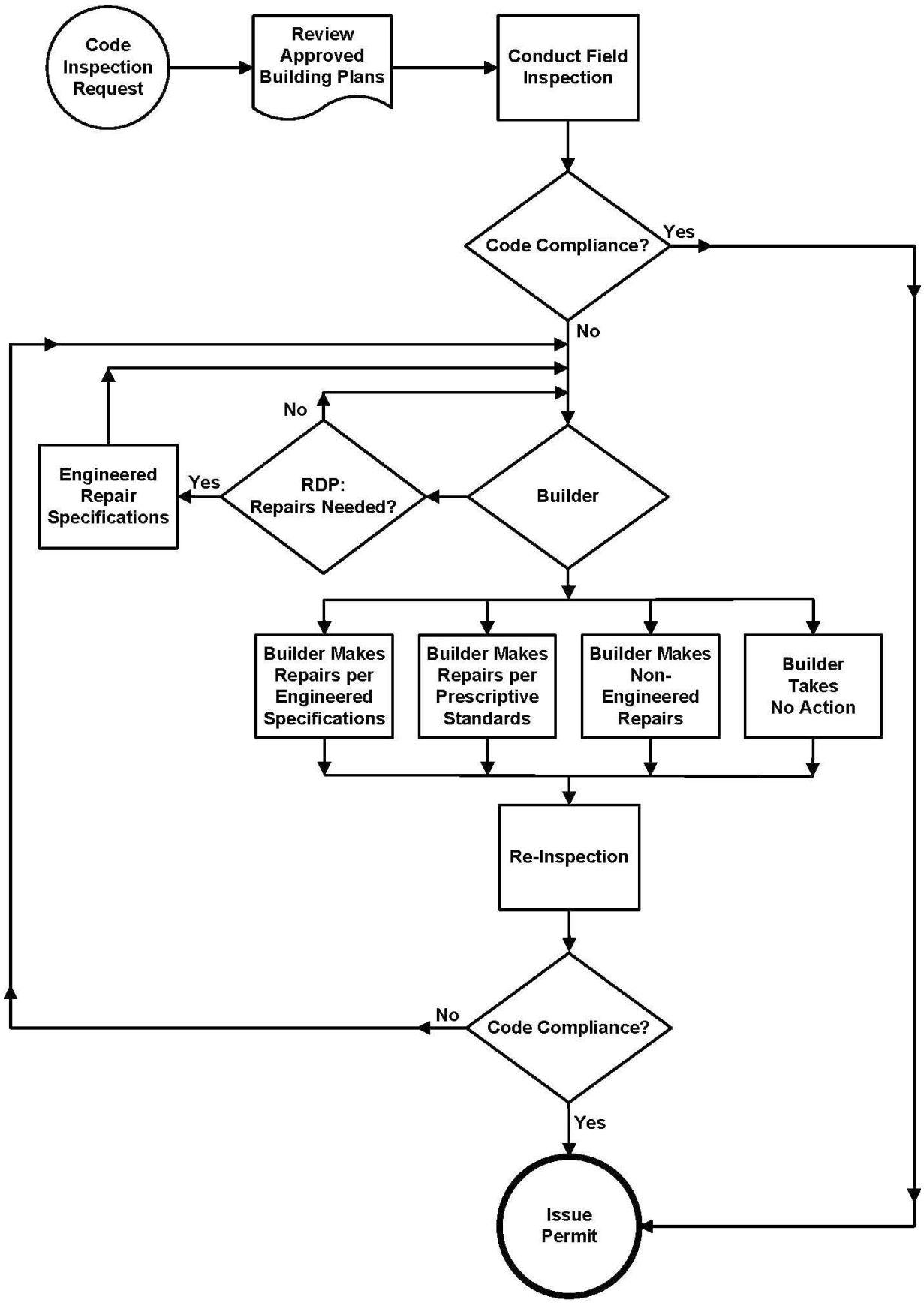
Code Inspection Request
Review Approved Building Plans
Conduct Field Inspection
Code Compliance?
Yes
No
No
Engineered Repair Specifications
Yes
RDP: Repairs Needed?
Builder
Builder Makes Repairs per Engineered Specifications
Builder Makes Repairs per Prescriptive Standards
Builder Makes Non-Engineered Repairs
Builder Takes No Action
Re-Inspection
No
Code Compliance?
Yes
Issue Permit

35) Please review the following post-home inspection flowchart and make suggestions for corrections on the flowchart as you see fit. Please comment on your suggestions below.

Please explain:_____

_____

_____

_____

_____

_____

_____

_____

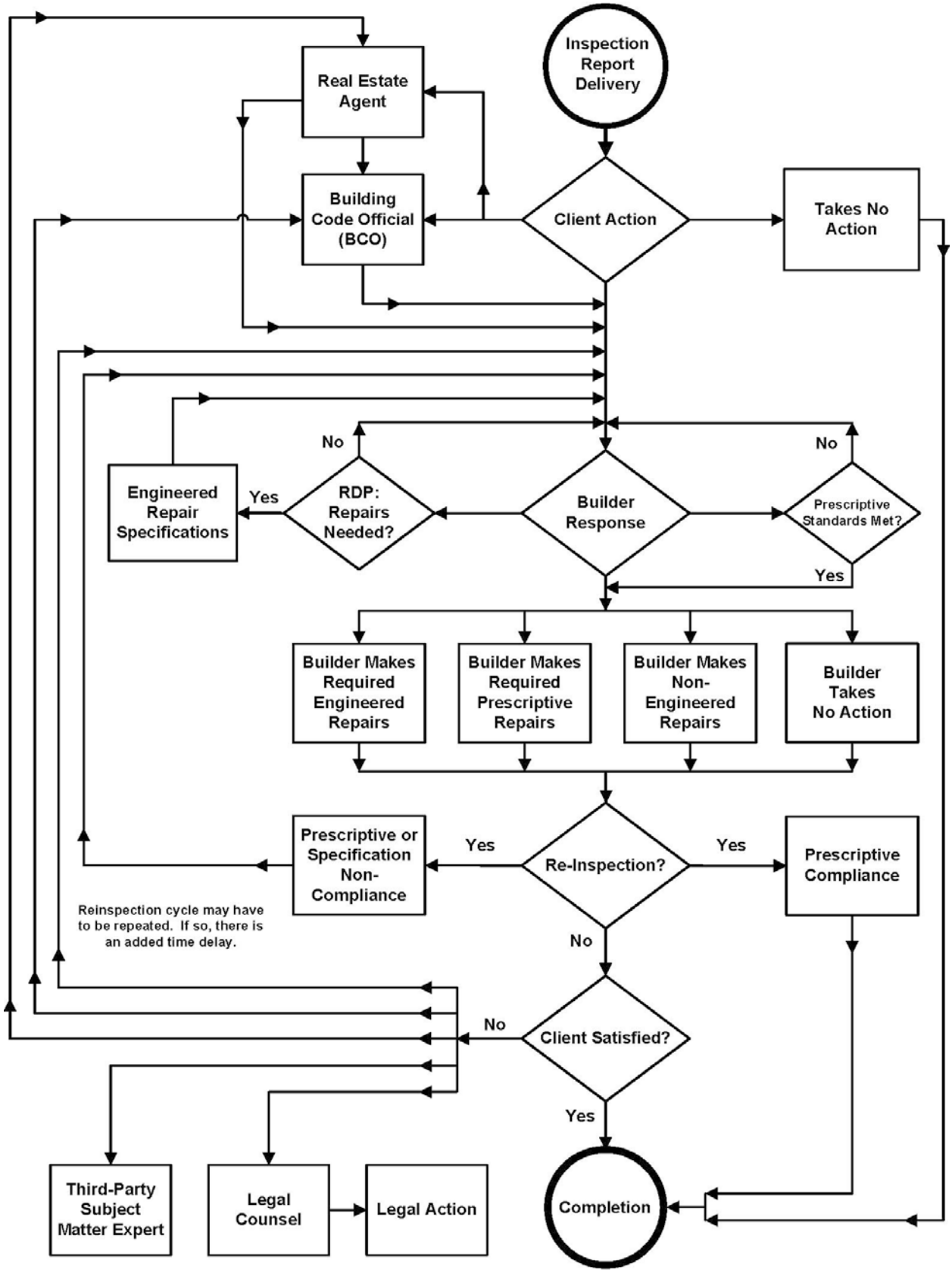
Inspection Report Delivery
Real Estate Agent
Building Code Official (BCO)
Client Action
Takes No Action
Engineered Repair Specifications
Yes
No
RDP: Repairs Needed?
Builder Response
No
Prescriptive Standards Met?
Yes
Builder Makes Required Engineered Repairs
Builder Makes Required Prescriptive Repairs
Builder Makes Non-Engineered Repairs
Builder Takes No Action
Prescriptive or Specification Non-Compliance
Yes
Re-Inspection?
Yes
Prescriptive Compliance
Reinspection cycle may have to be repeated. If so, there is an added time delay.
No
No
Client Satisfied?
Yes
Third-Party Subject Matter Expert
Legal Counsel
Legal Action
Completion

36) Please review the following table for identifying high risk aspects of EWCs, and make suggestions for corrections on the table as you see fit. Please comment on your suggestions below.

Please explain: _____

_____

_____

_____

Components →	I-Joists	Beams	Columns	Rimjoist	OSB Sheathing			MPCWT*
High Risk Aspects ↓					Floor	Roof	Ext	
Bearing	√	√	√	√				√
Holes	√	√	√	√				√
Notches	√	√	√	√				√
Fasteners	√	√	√	√	√	√	√	√
Blocking	√	√	√		√	√	√	
Permanent Bracing	√		√					√

37) Please review the following table to identify the most common EWC manufacturers in your region, and make suggestions for corrections on the table as you see fit. Please comment on your suggestions below.

Please explain:_____

_____

_____

_____

Manufacturer →	I-Level	GP	LP	Huber	SST	USP
Components ↓	Documentation Needed					
I-Joists	√	√	√			
Beams	√	√	√			
Columns	√	√	√			
Rimjoists	√	√	√			
OSB Sheathing	√	√	√			
OSB Subflooring	√	√	√	√		
Hanger Hardware					√	√

38) Does the proposed methodology include all the important elements of a competent EWC inspection?

Yes No

Please explain: _____

_____

_____

39) Is the proposed methodology based on appropriate assumptions?

Yes No (SST = Simpson Strong-Tie)

Please explain: _____

_____

40) What additional onboard reference material (knowledge base) do you think should be included in the software application?

Please explain: _____

_____

_____

41) What improvements to the methodology are needed, if any?

Please explain: _____

_____

_____

42) What improvements to the software application are needed, if any?

Please explain: _____

_____

_____

43) Does the revised methodology include all the important elements of an EWP pre-drywall inspection?

Yes No

Please explain: _____

_____

44) Is the revised methodology based on valid assumptions?

Yes No

Please explain: _____

_____

45) Is the included on-board reference material (knowledge base) sufficient for this project? Is there any other source documentation you would like to see included in the software application?

Yes No

Please explain: _____

_____

46) Are any improvements to the revised methodology needed?

Yes No

Please explain: _____

_____

47) Are any improvements to the revised software application needed?

Yes No

Please explain: _____

_____

48) Do the revised methodology, assumptions, knowledge base, and software application meet the validation requirements of having high face validity, meaning that they seem reasonable to accomplish the goal of this research project?

Yes No

Please explain: _____

_____

a) If no, please indicate what must be modified to achieve validation.

Please explain: _____

_____

_____

b) If the modifications specified in 7a) above are met, will the revised methodology, assumptions, knowledge base, and software application meet the requirements for validation?

Yes No

Please explain: _____

_____

Appendix D: Original Spreadsheet

Question #		Summary for all SMEs	HI Comments			BCO Comments				Industry Reps		
		All SME Responses	H-1	H-2	H-3	B-10	B-11	B-12	B-13	IR - 1	IR - 2	IR - 3
1	a	i-Level	1	1	1	1	1	1	1			
	b	GP	1		1	1	1	1	1			
	c	LP		1	1	1	1	1	1			
	d	Jager	1	1								
	e	Nordic							1			
	f	Boise					1	1				
	g	International Paper							1			
	h	Specify APA series							1			

	a	Notches	1	1	1		1	1		1	1	1
	b	Web holes & too close	1	1	1	1	1		1	1	1	1
	c	Web hammer holes										1
	d	Cut, split chords, flanges	1	1	1	1	1		1			
	e	Squash blocks - missing, short	1	1								
	f	Blocking at cantilevers	1		1	1						
	g	Handling, flat lifting	1	1								1
	h	Where joist orientation changes - side loaded doubles	1									
	i	Fasteners	1				1		1			1
	j	Damage, modifications (may be caused by other trades)	1		1							1
	k	Hangers, wrong		1	1		1	1	1			
	l	Lack of web stiffeners		1	1		1					1
	m	Out of plumb	1	1								
	n	Pressure on squash blocking			1							
2	o	Weathering				1						
	p	Bearing					1	1	1			
	q	Attachment to plates					1					
	r	Wrong type of EWP					1					
	s	Fastening of doubled I-joists					1					
	t	Improper repairs						1				
	u	Improper angles or bird's mouth cuts						1				
	v	Header applications						1				
	w	Blocking		1				1				1
	x	Filler Blocking			1							1
	y	Point loads						1				
	z	Wrong EWP brand or series on plan submissions							1			
	aa	When to use blocking panels instead of squash blocks?										1
	bb	When to use stiffeners instead of squash blocks?										1
	cc	Lack of proper nailing to sill plates, anchoring					1					

	dd	Builders think I-joists are the same as dimension lumber				1							
	ee	Installers don't look at plans							1				
	ff	Problems at interfaces with other materials											1
	gg	Moisture damage (evidenced by mud on materials)											1
	hh	Retrofitting details such as blocking											1

	a	Review manufacturer specifications (onsite)	1	1		1		1	1			1
	b	Inspect each individual I-joist	1	1	1							
	c	Walk each room	1						1			
	d	Shine flashlight on each one to focus attention	1									
	e	Use patterns to compare joists within the system	1									
	f	Look up at level above **(especially under stacked loads)**	1									1
	g	Use ladder	1		1		1	1				
	h	View cavity between doubled I-joists	1									
	i	Use tape measure as a feeler gauge between doubled I-joists	1									
	j	Use mfr contact information during or after inspection	1									
	k	Identify (Spray paint) problem areas		1								
	l	Methodical			1							
	m	Systematic			1							
	n	Up close			1		1					
3	o	Don't use ladder				1						
	p	Approved plans				1		1	1			
	q	APA standards						1				
	r	Plan review of documents							1			
	s	Visual inspection						1	1			
	t	Use manufacturer software							1			
	u	Engineering specifications										
	v	Look for excessive deflection of floor system	1									
	w	inspect for blocking - that is too short (installed after-the-fact)					1					
	x	Use manufacturer software							1	1	1	
	y	What appears to be a repair may actually be bracing			1							
	z	Plan documents submitted for review don't match what's used							1			
	aa	Out of plumb	1									
	bb	Fasteners	1									
	cc	Blocking	1									

	dd	Flanges	1										
	ee	Web holes	1										
	ff	Hanger problems					1						

4	a	LP	1	1	1		1		1				
	b	GP	1		1		1	1	1				
	c	Jager	1	1									
	d	Some not identified	1	1									
	e	i-Level			1		1	1	1				
	f	Boise					1	1					
	g	Nordic							1				
	h	International Paper							1				

	a	Cupped beams	1									
	b	Splayed at fasteners	1									
	c	Poor support	1									
	d	Cuts and holes	1	1	1					1		
	e	No plans and don't want them	1									
	f	If review plans, sets up unrealistic expectation for entire house	1									
	g	Modifications	1	1	1							
	h	Notches	1	1	1		1	1		1		
	i	Bearing		1	1	1	1	1	1			
	j	Fasteners	1	1	1		1					
	k	Drilling or cutting		1	1		1	1	1			
	l	Hangers	1		1							
	m	Concentrated loads			1							
	n	Attachments	1		1	1						
	o	Size of point load blocking (same footprint as columns)					1					
	p	Support, size and number of jack studs					1	1	1			
5	q	Fastening patterns for multi-ply members			1	1		1				
	r	Correct component for the application?	1				1					
	s	Side load applications - (higher risk than top load applications)				1						
	t	Appearance of structural problems				1						
	u	Beams out of plumb		1								
	v	Multiple member fastening	1	1	1	1	1	1	1			
	w	Uplift protection					1					
	x	HH: wrong size, wrong type, mix up w/face &top		1	1		1	1				
	y	Angle cuts						1				
	z	Improper repairs	1		1			1				
	aa	Undersized						1				
	bb	Sill plate compression							1			
	cc	Prefer columns be run through subfloor and ceiling/floor cavity							1			
	dd	Dropped headers							1			
	ee	Blocking							1			
	ff	Holes through beams and columns							1			

	gg	Excessive floor deflection	1									
	hh	Concentrate on individual components	1									
	ii	Follow load paths	1									
	jj	If something is not there, can't tell that it is missing	1							1		
	kk	Support	1	1	1							
	ll	Stacked columns only toe-nailed										1
	mm	Wood columns embedded in concrete										1
	nn	Poor column-to-beam connection such as bent nails only										1

	a	No Response				1						
	b	Nails & bolts		1								
	c	Fastening patterns		1								
	d	Support		1	1							
	e	Vertical load paths		1					1			
	f	Methodical			1							
	g	Systematic			1							
	h	Up close			1							
6	i	Modifications			1							
	j	Use ladders			1							
	k	Use manufacturer specifications	1				1	1	1			
	l	Inspect each one			1		1					
	m	Approved plans						1	1			
	n	No ladders							1			
	o	APA standards						1				
	p	No plans and don’t want them	1									
	q	If review plans, sets up unrealistic expectation for entire house	1									

7	a	Dimension lumber (some gusseted)	1									
	b	I-joist rims	1									
	c	No I-joist rims			1							
	d	LSL	1		1	1	1	1				
	e	Never see LVL rims			1							
	f	1.25" rimjoist		1								
	g	LVL	1				1	1				
	h	As specified by designer in floor package					1		1			
	i	Plywood 5/8 inches to 3/4 inches	1									
	j	1.125" rimjoist				1						

8	a	i-Level	1		1		1	1	1			
	b	Usually the same brand as the floor system.	1	1	1		1					
	c	GP	1		1		1	1	1			
	d	LP			1		1	1	1			
	e	Boise					1	1				
	f	Nordic							1			
	g	International Paper							1			
	h	Specify APA series							1			
	i	No Response				1						
	j	Jager	1									

9	a	No common occurrence	1									
	b	Could have wrong thickness, but don't know for sure	1									
	c	Deck attachment	1					1	1			
	d	Headers over openings and I-joist support		1	1							
	e	Bearing			1							
	f	Damage	1		1							
	g	Cut through rim boards and butt joints over foundation openings	1		1		1					
	h	Use of OSB instead of rim board material						1				
	i	Two pieces cut to fit - height						1				
	j	Use of header material for rim boards	1					1				
	k	Outboard framing overhanging foundation walls/plates							1			
	l	Not bearing on top plates							1			
	m	Lack of toe nailing into plates and subfloor							1			
	n	Lack of blocking panels at cantilever bearing										1
	o	Must also look at supporting structure									1	
	p	Foundation dips - floor system -need shimming, non-shrink grout	1									

10	a	Openings in foundation - headers	1	1								
	b	Measure rim headers for double thickness		1								
	c	Fastener problems		1			1					
	d	Methodical			1							
	e	Systematic			1							
	f	Up close			1							
	g	Use ladder			1							
	h	Inspect each member - look at everything			1							
	i	Vertical load path issues			1							
	j	Go up and down to trace load paths			1							
	k	Use manufacturer information					1	1	1			
	l	LOOK at it					1					
	m	Make a 360 degree sweep inside							1			
	n	Look out/hang out windows							1			
	o	OK to have house wrap in place before the inspection							1			
	p	No response				1						
	q	Visual inspection						1	1			
	r	Approved construction documents						1	1			
	s	APA standards						1				
	t	Lift house wrap if possible		1								

11	a	GP	1			1	1	1	1			
	b	LP	1				1					
	c	i-Level		1			1	1	1			
	d	Boise		1			1					
	e	TECO			1							
	f	Don't really look at brands		1	1							
	g	Other	1					1				
	h	Whatever is on sale at the local lumber center							1			
	i	Specify APA series							1			

12	a	Improper nailing	1	1	1	1						
	b	Improper sheathing spacing – 1/8 inches apart	1	1								
	c	Trades cut too large holes for sheathing	1									
	d	Only inspect roof from exterior	1									
	e	Use of 'H' clips		1	1	1						
	f	Push against sheathing to see if properly nailed	1	1								
	g	Added blocks because sheathing doesn't break on support	1	1	1							
	h	Damage			1							
	i	Bearing	1		1							
	j	Braced wall lines					1	1	1			
	k	Blocking at sheathing butt joints	1		1	1						
	l	Don't inspect roof sheathing - obstructed by roof covering										
	m	Don't inspect wall sheathing - obstructed by house wrap										
	n	Fastener spacing - field and edge	1				1	1	1			
	o	Weather protection					1					
	p	Deck & porch attachment					1					
	q	Missing adhesives					1					
	r	OSB material used as shims under bearing beams					1					
	s	Missed nails using gun nails		1								
	t	Staple fasteners are hard to detect							1			
	u	Must use stainless steel fasteners with FRT sheathing									1	
	v	Lack of HDG nails into sill plates							1			

13	a	Look at exterior walls for bulging horizontally and vertically	1		1							
	b	Push on sheathing to see if loose, no deflection	1	1					1			
	c	Said requirement for tighter roof nailing pattern than for walls---?	1									
	d	Check roof sheathing for problems like wall sheathing	1									
	e	Improper nailing edge and field	1									
	f	Too large holes cut in sheathing	1									
	g	Use ladders			1							
	h	Use binoculars inside when needed			1							
	i	No response		1								
	j	Roof and wall sheathing exterior inspection obstructed by wrap										
	k	If house wrap, must have an inspection before installation					1					
	l	Visual						1	1			
	m	Inspect during construction						1				
	n	Based on design and layout provisions, approved plans, mfr specs										
	o	APA standards						1				
	p	Spot check on outside							1			
	q	Staple fasteners are hard to detect							1			
	r	Inspect for 'shiners'							1			
	s	Push against sheathing to see if properly nailed		1								
	t	Only inspect roof from exterior	1									
	u	Don't inspect roof sheathing - obstructed by roof covering			1	1						
	v	Don't inspect wall sheathing - obstructed by house wrap			1	1						

14	a	Advantech (Huber)	1		1	1	1	1				
	b	LP	1									
	c	GP	1					1	1			
	d	TECO			1							
	e	No response		1								
	f	i-Level					1	1	1			
	g	Other					1	1				
	h	Whatever is on sale at the local lumber center							1			
	i	Specify APA series							1			

15	a	Crushing of t & g due to excessive force by pounding boards		1								
	b	Nail/fastener problems - overdriven, missed nails, nailing pattern, etc.	1	1	1	1	1	1	1			
	c	Warped or swelled wood	1		1							
	d	Upside down – problem due to water resistant coating one side	1									
	e	Unsealed edges when cut – can swell when wet	1									
	f	Spacing too tight	1	1					1			
	g	Raised fasteners		1								
	h	Added blocks because sheathing doesn't break on support		1								
	i	Delamination due to weathering				1						
	j	Overspanning?					1	1				
	k	Lack of weather protection							1			
	l	Damage			1							
	m	Crowning		1								
	n	Removing tongue at edges										1
	o	OSB material used as shims under bearing beams										1

15	a	Crushing of t & g due to excessive force by pounding boards		1								
	b	Nail/fastener problems - overdriven, missed nails, nailing pattern, etc.	1	1	1	1	1	1	1			
	c	Warped or swelled wood	1		1							
	d	Upside down – problem due to water resistant coating one side	1									
	e	Unsealed edges when cut – can swell when wet	1									
	f	Spacing too tight	1	1					1			
	g	Raised fasteners		1								
	h	Added blocks because sheathing doesn't break on support		1								
	i	Delamination due to weathering				1						
	j	Overspanning?					1	1				
	k	Lack of weather protection							1			
	l	Damage			1							
	m	Crowning		1								
	n	Removing tongue at edges										1
	o	OSB material used as shims under bearing beams										1

17	a	SST	1	1	1	1	1	1	1			
	b	USP		1		1	1	1	1			

18	a	Missing, wrong sizes & wrong type of hanger, too short member	1	1	1	1			1			
	b	Gap at bearing in pocket	1									
	c	Top strap hangers are spread into a 'V'. (Added face mount hangers.)	1									
	d	Backer blocking									1	
	e	Missing filler panels on both members	1		1							
	f	HH pocket wider than supported member	1									
	g	Missing nails	1	1	1		1	1			1	
	h	Missing bottom flange nails									1	
	i	Improper nails (gun nail types, too large, too small)	1	1	1	1	1	1	1		1	
	j	Improper retrofit of top strap hangers		1	1							
	k	Rusted hangers - improper coating		1				1				1
	l	Cut			1							
	m	Web stiffeners	1		1							
	n	Modifications, Other trades, Forced fit				1					1	
	o	Deck applications				1						
	p	Fasteners improperly installed		1					1			
	q	Wrong Screws in HH									1	
	r	Inverted hangers										1
	s	Focus on each one	1									
	t	Lumber yards tend to have poor selection of hangers for I-joists									1	
	u	HH should be bought from the same distributor as floor system										1
	v	Gun nailing									1	
	w	Wrong HH, wrong sizes, high risk when bought from lumber store	1				1				1	1

19	a	Manufacturer specifications	1					1	1			
	b	General knowledge	1									
	c	Plumb	1									
	d	Fasteners	1				1					
	e	Check every component	1	1	1							
	f	Use flashlight - focus attention	1	1								
	g	Use step ladder	1		1							
	h	Use binoculars inside (last resort)			1							
	i	Top-down				1						
	j	Get up and look at it	1		1		1					
	k	Visual inspection						1	1			
	l	Based on design and layout provisions, approved plans, mfr specs						1				
	m	APA standards						1				
	n	Hanger types					1					

	a	Broken trusses	1		1							
	b	Damaged gussets	1	1	1							
	c	Leaning or bowed	1	1								
	d	Missing proper blocking/wood connectors at piggy backs	1		1							
	e	Permanent bracing per plans	1	1	1			1	1			
	f	Improper overlap at diagonal bracing	1	1	1							
	g	Strong backs cut, not there or compromised		1		1						
	h	Purlin spacing at piggyback trusses	1									
	i	Modifications		1								
	j	Lack of diagonal bracing	1	1	1							
	k	Chords and webs		1								
	l	Bearing areas	1	1	1		1					
	m	Lack of diagonal wind bracing for shear	1	1	1							
20	n	Nailing/improper fastening			1							
	o	Hangers				1	1	1	1			
	p	Handling problems				1						
	q	Improper repairs - especially repetitive				1		1		1		
	r	Backwards installation				1	1			1		
	s	Attachment to plates					1					
	t	Multi-ply girders - fastening					1	1	1			
	u	Up lift provisions						1				
	v	Improper handling		1								
	w	Improper fastening				1			1	1		
	x	Compound spans				1						
	y	Interior bearing				1						
	z	Missed bearing points				1						

21	a	Walk through roof trusses if necessary/possible	1		1							
	b	Look up at trusses			1							
	c	From top level shine flashlight– sight each one, front/back	1									
	d	Check roof sheathing same time	1									
	e	Improper handling	1									
	f	Floor trusses: Concentration of load, material dropping & storage	1									
	g	Open web floor trusses same as roof plus missing strongbacks	1		1							
	h	Check each component		1								
	i	Look for repairs - may be improperly repaired			1							
	j	Get up and look at it					1					
	k	Depends on individual case				1						
	l	Use design & layout provisions, approved plans, ANSI/TPI		1				1	1			
	m	Per engineered specifications				1						
	n	APA standards						1				
	o	Check bearing areas		1	1							
	p	Trusses replaced with dimension lumber						1				
	q	Pay particular attention to girder trusses							1			
	r	Use patterns to compare trusses within the system	1									
	s	Visual inspection						1				
	t	Fasteners					1					

22	a	Yes	1	1	1		1	1				
	b	No							1			

	a	Inspect from street for general overview	1									
	b	View flat plane of roof, walls – buckled, bowed	1									
	c	Top down – follow load paths	1	1	1		1	1	1			
	d	Go through the attic (end-to-end and center if needed)			1			1				
	e	Use hammer and nails through subfloor to confirm vertical load paths						1				
	f	Foundation dips - floor system -need shimming, non-shrink grout	1									
	g	Shims at direct alignment	1									
	h	Inspect each one	1	1			1					
	i	Sill plates overhanging foundation walls		1	1							
	j	Flowchart: eliminate steps to create software & interview quests		1								
	k	Draw bearing diagram - Vertical load paths			1							
	l	Up to individual inspector					1		1			
	m	Use truss layout documents						1				
22a	n	Use multiple viewing angles						1				
	o	Must have manufacturers specifications onsite				1		1				
	p	Must have approved plans onsite						1	1			
	q	OSB or plywood on side of trusses indicate possible repairs			1							
	r	No 'T' bracing on webs			1							
	s	Point loads							1			
	t	Attic inspected from the top floor							1			
	u	Get as close as possible						1				
	v	Enter crawlspaces					1	1				
	w	Locate point loads			1			1				
	x	Backwards truss installation						1				
	y	Truss replaced with dimension lumber						1				
	z	Room-by-room						1				
	aa	Inspect for split load paths						1				
	bb	Sizing of LVL headers			1							

	cc	Based on house scale and complexity							1			
	dd	May use inspection teams if necessary							1			
	ee	Do not enter attics				1						
	ff	Do not enter crawlspaces				1						
	gg	Do not use ladders outside at pre-drywall, can't tie off, uneven ground.			1							

23	a	Yes	1		1			1	1			
	b	No		1		1	1					

23a	a	Each level is a zone	1		1			1				
	b	Each room is a zone	1					1				
	c	Each component is a zone	1									
	d	Outside is a zone			1							
	e	Top-down			1			1				
	f	Follow vertical load paths (load paths are zones)			1			1				
	g	Up to the individual inspector					1		1			

23b	a	Top-down			1			1				
	b	Outside			1							
	c	Get as close as possible			1							
	d	Visual inspection per plans						1	1			
	e	Make sure load path elements stack directly on top of each other						1				
	f	Enter attic			1		1	1				
	g	Enter crawlspace			1		1	1				
	h	Be sure bracing is in place						1				
	i	Truss layout documents						1				
	j	Backwards truss installation						1				
	k	Truss replaced with dimension lumber						1				
	l	Room-by-room						1				
	m	Inspect outside first so as to not track mud inside					1					
	n	If really large, ask other inspectors to help out					1					
	o	Do not enter attics				1						
	p	Do not enter crawlspaces				1						

24	a	Self-imposed standards	1	1								
	b	No other standards currently available	1	1								
	c	HIs - Will use ASHI Predrywall standards when available	1	1								
	d	i-Level pocket guide			1							
	e	HIs - Sometimes use truss drawings			1							
	f	HIs - Don't look at blueprints, plans			1							
	g	None				1						
	h	VA Construction code						1	1			
	i	VA Residential code						1	1			
	j	IBC						1				
	k	IRC						1	1			
	l	Up to individual inspectors					1					

25	a	No	1	1	1	1	1	1	1			
	b	Inspect outside first so as to not track mud inside					1					
	c	Inspector must pace him/herself							1			
	d	Inspector must maintain good hydration							1			
	e	Might affect the length of time for the inspection							1			

26	a	No	1	1	1	1	1	1	1			

26a	a	Yes	1	1	1							
	b	Not applicable				1	1	1	1			

26b - 26c	a	Estimate 1 hour per 1,000 sf	1									
	b	Estimate 15 minutes per 1,000 square feet (added 1-5-11 per B-10)				1						
	c	Minimum 3.5 hours regardless of sf	1									
	d	If really large, ask other inspectors to help out	1									
	e	Whatever time it takes		1	1	1						
	f	2 - 5 hours for 1500-7000 sf house and some complex houses			1							
	g	2.5 - 3.5 hours plus office time		1								
	h	35 - 45 minutes					1					
	i	35 minutes - 3 hours, depending						1				
	j	Expertise of the builder						1				
	k	Familiarity with the builder's work						1				
	l	Production builders- inconsistent quality, may take longer to inspect						1				
	m	Size and complexity of structure may determine length of inspection			1			1				
	n	Language barrier can affect time needed						1				
	o	One to two hours for 3000 - 5000 sf house							1			
	p	4 hours (includes office time to write up report)	1									

26d	a	Inspector	1		1	1	1	1				
	b	Client	1									
	c	House	1	1	1		1	1	1			
	d	Sometimes builder	1		1							
	e	If needed, will come back later to finish			1							
	f	Supervising field inspector				1						

26e	a	Depends on client questions and interruptions	1									
	b	Depends on house size and complexity			1		1	1				
	c	Contract contingency might affect time frame		1								

26f	a	Yes	1	1	1	1	1	1	1			
	b	Diminishing returns after a certain amount of time							1			
	c	More experienced inspectors will find more problems					1	1				
	e	Experience and knowledge of the inspector is more important than time					1	1				
	f	The longer you look, the more problems found			1							
	g	HI says he can spend more time on site than a BCO		1								

27	a	Yes	1	1	1	1		1	1			
	b	Defects will be found	1		1			1				
	c	Depends on jobsite supervisor - could be yes or no				1						
	d	Assumes the builder knows what to do					1					
	e	Know which builders/framers have adequate knowledge of EWPs						1				
	f	Production builders- inconsistent quality, may take longer to inspect						1				
	g	Some framers 'never get it'						1				
	h	Up to the individual inspector							1			
	i	No					1					

28	a	Depends on member, try to get as close as possible	1	1								
	b	Roof trusses could be 20 feet away	1									
	c	Floor trusses closer - ceiling height	1									
	d	5 - 10 feet if possible			1	1						
	e	If a problem is suspected, get within 2 feet			1							
	f	Use binoculars only if can't reach by climbing			1							
	g	Depends on member							1			
	h	Try to get as close as possible							1			
	i	10 - 15 feet roof and roof trusses from inside				1		1				
	j	6 feet height - should mean 2 - 3 feet					1	1				
	k	Close enough to inspect					1					
	l	Focus on problem areas more closely							1			
	m	Use ladder when needed		1				1				
	n	1 - 5 feet ideal, but may be 5 - 10 feet							1			

28a	a	Only to inspect roof from exterior	1						1			
	b	Use binoculars on outside only		1	1							
	c	If component is that far away, get up and look at it					1					
	d	Use binoculars any time conditions require them						1				
	e	Use binoculars for gable sheathing							1			
	f	Only if framing is not reasonably accessible by climbing			1							
	g	Binoculars OK, not required				1						

29	a	Flashlight	1	1	1	1	1	1	1			
	b	Tape measure	1	1	1	1	1	1	1			
	c	Folding wooden ruler - fold to 2 feet, use to inspect truss spacing	1									
	d	Torpedo level	1	1								
	e	Laser level		1								
	f	Longer level – 4’ or more - sometimes	1	1	1		1					
	g	Level - size not specified			1		1	1				
	h	No marking devices	1									
	i	Markers or lumber crayons		1	1							
	j	Camera	1					1	1			
	k	Clipboard & list	1		1							
	l	Ladder			1		1					
	m	Binoculars			1							
	n	Scratch awl, probe, screwdriver			1				1			
	o	Level - two feet				1						
	p	Magnifying glass					1					
	q	Gloves						1	1			
	r	Knee pads						1	1			
	s	Hard hat						1	1			
	t	Digital voice recorder			1			1				
	u	Laptop with internet card							1			
	v	Overalls							1			
	w	Safety shoes							1			
	x	Cell phone							1			

30	a	Manufacturer specifications	1	1		1	1	1	1			1
	b	APA standards						1				
	c	i-Level guide only			1							
	d	Approved plans				1	1	1	1			
	e	Layout and individual product specifications				1	1					
	f	Use manufacturer software							1	1	1	
	g	Experience base of all inspectors and plan reviewers							1			
	h	ANSI/TPI								1		
	i	Look for engineering								1		

31	a	High importance	1	1	1	1	1	1	1			
	b	People are human, have some bad days							1			
	c	Prefer the term 'engagement' to 'enthusiasm'							1			
	d	Interested in doing a good job			1							
	e	Difference between fault finding and education							1			

32	a	Engineered preferred	1				1					
	b	Dimension lumber			1							
	c	Combination		1		1		1	1			

	a	Combine roof I-joists 1 and 2	1			1						
	b	I-joist floor – look up method	1									
	c	Beams and columns: span, vertical support	1									
	d	Rimjoist methods combine	1				1					
	e	OSB sheathing – no roof top or exterior method – can't see	1	1	1	1	1					
	f	Floor OSB combine – top and bottom methods	1	1		1	1					
	g	MPCWT roof – combine	1	1	1							
	h	HH - combine	1	1	1							
	i	Roof I-joists - no attic			1							
	j	Rimjoists - can't see from outside - eliminate this method		1								
	k	MPCWT roof no attic method		1		1						
33 - 34	l	No need for I-joist rimjoist method			1							
	m	For LVL & PSL beam/col add hangers, bearing, & concentrated loads			1							
	n	Add OSB top level method for roof sheathing			1							
	o	I-joists - combine all				1						
	p	I-joist rim boards not used				1						
	q	I-joist rafters - combine					1	1				
	r	OSB wall sheathing - combine all										
	s	Most methods are not important to define						1				
	t	Table is not necessary						1	1			
	u	Up to individual inspector							1			
	v	Use multiple viewing angles						1				
	w	Get as close as possible to see						1				
	x	MPCWT combine attic and top level					1					

35	a	Reverse items one and two	1	1	1		1	1				
	b	End goal is approval, not permit issued, was already done	1	1	1	1	1	1	1			
	c	Step one - Review plans				1						
	d	Step two - Apply for permit				1						
	e	Step three - Inspection request				1						
	f	If rejected, requires reinspection				1						
	g	Step one - review plans							1			
	h	Step two - Issue permit							1			
	i	Step three - Inspection request							1			

36	a	OK as is	1	1			1					
	b	Not necessary		1								
	c	Not sure about Realtor involvement		1	1							
	d	Rare that inspector is called back to review			1	1	1	1				
	e	No calls from dissatisfied buyers				1						
	f	Very rare to have legal counsel involved				1						
	g	If callback is required, usually as a result of HI inspection						1				
	h	Prefer not to get involved with disputes						1				
	i	Building department may receive an 'alert call' before inspection							1			
	j	If call comes in after the inspection - will reinspect if needed							1			

37	a	Add bearing to all OSB sheathing	1									
	b	Add holes to all OSBs			1							
	c	Add blocking to MPCWT	1									
	d	No need for column permanent bracing		1								
	e	Rimjoists - can't see holes & notches , no need for these risk areas		1								
	f	High risk areas - add damage due to shipping, handling, install			1							
	g	Delete permanent bracing for I-joists				1						
	h	Missing proper wood connectors at piggy backs				1						
	i	Subfloor must break properly on supporting members	1									
	j	No changes					1	1	1			

38	a	Add Jager	1	1								
	b	Delete i-Level, GP, and LP for all OSB sheathing and subflooring			1	1						
	c	Add Boise					1	1	1			
	d	Add International Paper							1			
	e	Add Nordic							1			

39	a	Yes	1	1	1	1	1	1	1			
		Important to have manufacturer layout				1						
		Important to have prescriptive specifications				1						

40	a	Yes	1	1	1	1	1	1	1			

41	a	Manufacturer specifications	1	1	1	1	1					
	b	Generalized methodology	1									
	c	None at this time						1	1			
	d	Will bring in other lead inspectors to comment						1				
	e	Link to website from software					1					
	f	Use truss layout documents						1				
	e	APA standards						1				

42	a	No changes	1	1	1	1	1	1				
	b	Need standard inspector uses		1								
	c	Will bring in other lead inspectors to comment					1	1				
	d	Focus on how to make inspectors use it							1			

43	a	No changes	1	1		1	1	1				
	b	Impressed	1	1	1							
	c	Too much detail		1								
	d	Must be accurate to manufacturer and series		1								
	e	Needs more time to review			1							
	f	EWP specifications for reporting and to remind inspector			1							
	g	Fast, easy, and simple to drill down to needed information			1			1				
	h	Suggest using free 30-day trial for review period			1							
	i	Think like an inspector						1	1			
	j	Must provide simple responses						1				

Appendix E: Spreadsheet with Proposed Reorganizations

Question #		Summary for all SMEs Generalized Responses are Combined in 22a	Question #		Researcher Comments, Reasons
1		What are the most common brands of I-joists used in your area?			
1	a	i-Level	1	a	
	b	GP		b	
	c	LP		c	
	d	Jager		d	
	e	Nordic		e	
	f	Boise		f	
	g	International Paper		g	Deleted. International Paper no longer manufactures EWP.
	h	Specify APA series		h	Deleted. APA is not a brand of EWP manufacturer

4		What are the most common brands of LVLs and PSLs used in your area?			
4	a	LP	4	a	
	b	GP		b	
	c	Jager		c	
	d	Some not identified		d	
	e	i-Level		e	
	f	Boise		f	
	g	Nordic		g	
	h	International Paper		h	Deleted. International Paper no longer manufactures EWP.

8		What are the most common brands of engineered rimjoists used in your area (LVL, I-joist, LSL, etc.)?			
8	a	i-Level	8	a	
	b	Usually the same brand as the floor system.		b	
	c	GP		c	
	d	LP		d	
	e	Boise		e	
	f	Nordic		f	
	g	International Paper		g	
	h	Specify APA series		h	Deleted. APA is not a brand of EWP manufacturer
	i	No Response		i	Deleted. 'No response' provides no information.
	j	Jager		d	

11		What are the most common brands of OSB wall and roof sheathing used in your area?			
11	a	GP	11	a	
	b	LP		b	
	c	i-Level		c	
	d	Boise		d	
	e	TECO		e	Deleted. TECO has not manufactured EWPs for several years.
	f	Don't really look at brands		f	
	g	Other		g	
	h	Whatever is on sale at the local lumber center		h	
	i	APA Series		i	Deleted. Not a Brand.

14		What are the most common brands of OSB wall and roof sheathing used in your area?			
14	a	Advantech (Huber)	14	a	
	b	LP		b	
	c	GP		c	
	d	TECO		d	Deleted. TECO has not manufactured EWPs for several years.
	e	No response		e	Deleted. 'No response' provides no information.
	f	i-Level		f	
	g	Other		g	
	h	Whatever is on sale at the local lumber center		h	
	i	APA Series		i	Deleted. Not a Brand.

17		What are the most common brands of OSB wall and roof sheathing used in your area?			
17	a	SST	17	a	
	b	USP		b	

2		What are the most common areas of prescriptive non-compliance w/I-joists?			
2	a	Notches	2	a	
	b	Web holes & too close		b	
	c	Web hammer holes		c	
	d	Cut, split chords, flanges		d	
	e	Squash blocks - missing, short		e	
	f	Blocking at cantilevers		f	Added per B - 10 request 1-5-2011.
	g	Handling, flat lifting		g	
	h	Where joist orientation changes - side loaded doubles		h	
	i	Fasteners		i	
	j	Damage, modifications (may be caused by other trades)		j	
	k	Hangers, wrong		k	
	l	Lack of web stiffeners		l	
	m	Out of plumb		m	
	n	Pressure on squash blocking		n	Deleted per H-3 request after first email review.
	o	Weathering		o	
	p	Bearing		p	
	q	Attachment		q	
	r	Wrong type of EWP		r	Deleted. Design/engineering issue. Outside the scope of this project.
	s	Fastening of doubled I-joists		s	
	t	Improper repairs		t	
	u	Improper angles or bird's mouth cuts		u	
	v	Header applications		v	
	w	Blocking		w	
	x	Filler Blocking		x	
	y	Point loads		y	
	z	Wrong EWP brand or series on plan submissions		z	Deleted. Plan subm documents are not available to field inspectors.

	aa	When to use blocking panels instead of squash blocks?		aa	Deleted. Based on an engineering decision; not prescriptive.
	bb	When to use stiffeners instead of squash blocks?		bb	Deleted. Based on an engineering decision; not prescriptive.
	cc	Lack of proper nailing to sill plates, anchoring		cc	
	dd	Builders think I-joists are the same as dimension lumber		dd	Part of general construction issues.
	ee	Installers don't look at plans		ee	Part of general construction issues.
	ff	Problems at interfaces with other materials		ff	
	gg	Moisture damage (evidenced by mud on materials)		gg	
	hh	Retrofitting details such as blocking		hh	

5	What are the most common areas of prescriptive non-compliance with LVLs, LSLs, and PSLs?				
5	a	Cupped beams	5	a	
	b	Beam splayed at fasteners - doesn't make full contact		b	
	c	Poor support		c	Deleted. Duplicate of 5kk.
	d	Cuts and holes		d	Deleted. Duplicate of 5k.
	e	No plans and don't want them		e	Moved to question 6r. Not a risk area.
	f	If review plans, sets up an unrealistic expectation for entire house		f	Moved to question 6s. Not a risk area.
	g	Modifications		g	Added. Moved from 6.
	h	Notches		h	
	i	Bearing		i	
	j	Fasteners		j	
	k	Drilling or cutting		k	
	l	Hangers		l	Deleted. Duplicate of 5x.
	m	Concentrated loads		m	
	n	Attachments		n	
	o	Size of point load blocking (same footprint as columns)		o	
	p	Support, size and number of jack studs		p	
	q	Fastening patterns for multi-ply members		q	Deleted. Duplicate of 2v.
	r	Correct component for the application?		r	Deleted. This is a design/engineering decision, not prescriptive.
	s	Side load applications - (higher risk than top load applications)		s	
	t	Appearance of structural problems		t	
	u	Beams out of plumb		u	
	v	Multiple member fastening		v	
	w	Uplift protection		w	
	x	Hanger hardware problems: wrong size, wrong type, mix up w/face &top		x	
	y	Angle cuts		y	
	z	Improper repairs (BCO12 repaired as if dimension lumber)		z	

	aa	Undersized		aa	Deleted. This is an engineering decision, not prescriptive.
	bb	Sill plate compression		bb	
	cc	Prefer columns be run through subfloor and ceiling/floor cavity		cc	
	dd	Dropped headers		dd	
	ee	Blocking		ee	
	ff	Holes through beams and columns		ff	
	gg	Excessive floor deflection		gg	
	hh	Concentrate on individual components		hh	Deleted here. General method. Included in question 22a.
	ii	Follow load paths		ii	Deleted here. General method. Included in question 22a.
	jj	If something is not there, can't tell that it is missing		jj	
	kk	Support		kk	Added. Moved from question 6.
	ll	Stacked columns only toe-nailed		ll	
	mm	Wood columns embedded in concrete		mm	
	nn	Poor column-to-beam connection such as bent nails only		nn	

7		What are the most common types of engineered rimjoists used in your area (LVL, I-joist, LSL, etc.)?			
7	a	Dimension lumber (some gusseted)	7	a	Deleted. Not engineered.
	b	I-joist rims		b	.
	c	No I-joist rims		c	
	d	LSL		d	
	e	Never see LVL rims		e	
	f	1.25" rimjoist		f	
	g	LVL		g	
	h	As specified by designer in floor package		h	Deleted? Information not available to inspector.
	i	Plywood 5/8 inches to 3/4 inches		h	Deleted. Retracted by HI 1
	j	1.125" rimjoist		i	

9		What are the most common areas of prescriptive non-compliance with engineered rimjoists?			
9	a	No common occurrence	9	a	Other SMEs disagree.
	b	Could have wrong thickness, but don't know for sure		b	
	c	Deck attachment		c	Not specifically rimjoist issue - a problem with outside connections.
	d	Headers over openings and I-joist support		d	
	e	Bearing		e	
	f	Damage		f	
	g	Cut through rim boards and butt joints over foundation openings		g	
	h	Use of OSB instead of rim board material		h	
	i	Two pieces cut to fit - height		i	
	j	Use of header material for rim boards		j	
	k	Outboard framing overhanging foundation walls/plates		k	
	l	Not bearing on top plates		l	
	m	Lack of toe nailing into plates and subfloor		m	
	n	Lack of blocking panels at cantilever bearing		n	
	o	Must also look at supporting structure		o	Deleted here. Moved to general construction issues.
	p	Foundation dips - floor system -need shimming, non-shrink grout		p	Added from question 22a f.

12		What are the most common areas of prescriptive non-compliance with OSB wall and roof sheathing?			
12	a	Improper nailing	12	a	
	b	Improper sheathing spacing – should be 1/8 inches apart		b	
	c	Trades cut too large holes for sheathing		c	
	d	Only inspect roof from exterior		d	Moved to question 13t. This is a method, not a risk area.
	e	Use of 'H' clips		e	
	f	Push against sheathing to see if properly nailed		f	Moved to question 13b. This is a method, not a risk area.
	g	Added blocks because sheathing doesn't break on support		g	
	h	Damage		h	
	i	Bearing		i	
	j	Braced wall lines		j	
	k	Blocking at sheathing butt joints		k	
	l	Don't inspect roof sheathing - obstructed by roof covering		l	Moved to inspection methods section - question 13.
	m	Don't inspect wall sheathing - obstructed by house wrap		m	Moved to inspection methods section - question 13.
	n	Fastener spacing - field and edge		n	
	o	Weather protection		o	
	p	Deck & porch attachment		p	
	q	Missing adhesives		q	
	r	OSB material used as shims under bearing beams		r	
	s	Missed nails using gun nails		s	
	t	Staple fasteners are hard to detect		t	Added. Moved from question 13q below.
	u	Must use stainless steel fasteners with Fire Retardant Treated		u	
	v	Lack of HDG nails into sill plates		v	

15		What are the most common areas of prescriptive non-compliance with OSB subflooring?			
15	a	Crushing of t & g due to excessive force by pounding boards	15	a	
	b	Nail/fastener problems - overdriven, missed nails, nailing pattern, etc.		b	
	c	Warped or swelled wood		c	
	d	Upside down – problem due to water resistant coating one side		d	Water coating is not the issue, having the rough side up is.
	e	Unsealed edges when cut – can swell when wet		e	This is possible, though not common.
	f	Spacing too tight		f	
	g	Raised fasteners		g	
	h	Added blocks because sheathing doesn't break on support		h	
	i	Delamination due to weathering		i	
	j	Overspanning		j	
	k	Lack of weather protection		k	
	l	Damage		l	
	m	Crowning		m	
	n	Removing tongue at edges		n	
	o	OSB material used as shims under bearing beams		o	
	p	Staple fasteners are hard to detect		p	Moved from question 16.

18		What are the most common areas of prescriptive non-compliance EWP hanger hardware?			
18	a	Missing, wrong sizes & wrong type of hanger, too short member	18	a	
	b	Gap at bearing in pocket		b	
	c	Top strap hangers are spread into a 'V'. (Added face mount hangers.)		c	Generalized this to include face mount hangers as well.
	d	Backer blocking		d	
	e	Missing filler panels on both members		e	
	f	HH pocket wider than supported member		f	
	g	Missing nails		g	Deleted. Duplicate of 18i.
	h	Missing bottom flange nails		h	Deleted. Removed per HH Rep request.
	i	Improper nails (gun nail types, too large, too small, missing)		i	
	j	Improper retrofit of top strap hangers		j	
	k	Rusted hangers - improper coating		k	
	l	Cut		l	
	m	Web stiffeners		m	
	n	Modifications.other trades, forced fit		n	
	o	Deck applications		o	Deleted. Outside scope of project.
	p	Fasteners improperly installed		p	
	q	Wrong Screws in HH		q	
	r	Inverted hangers		r	
	s	Focus on each one		s	Deleted. Relocated to 22a, generalized method.
	t	Lumber yards tend to have poor selection of hangers for I-joists		t	
	u	HH should be bought from the same distributor as floor system		u	
	v	Gun nailing		v	
	w	Wrong hangers, wrong sizes, high risk when bought from lumber store		w	Deleted. Duplicate of 18a.

20		What are the most common areas of prescriptive non-compliance with MPCWTs?			
20	a	Broken trusses	20	a	
	b	Damaged gussets		b	
	c	Leaning or bowed		c	
	d	Missing proper blocking/bracing/wood connectors at piggy backs		d	
	e	Permanent bracing per plans		e	Deleted 'per plans'. Plans show engineered specifications.
	f	Improper overlap at diagonal bracing		f	
	g	Strong backs cut, not there or compromised		g	
	h	Purlin spacing at piggyback trusses		h	Deleted. Duplicate of 20d.
	i	Modifications		i	
	j	Lack of diagonal bracing for compression webs		j	
	k	Chords and webs		k	Deleted here. Combined with 20 a above.
	1	Bearing areas		l	Deleted. Duplicate of 20z.
	m	Lack of diagonal wind bracing for shear		m	Deleted. This is a duplicate of 20e above.
	n	Nailing/improper fastening		n	Added/Modified. Combined with question 20 v.
	o	Hangers		o	
	p	Handling problems		p	deleted. Duplicate of 20v.
	q	Repairs - especially repetitive		q	
	r	Backwards installation		r	
	s	Attachment to plates		s	
	t	Multi-ply girders - fastening		t	
	u	Up lift provisions		u	
	v	Improper handling		v	
	w	Improper fastening		w	Deleted. Combined with 20 n above.
	x	Compound spans		x	
	y	Interior bearing		y	
	z	Bearing areas/missed bearing points		z	

3		What methods do you use/recommend to discover I-joist prescriptively non-compliant installation problems?			
	a	Review manufacturer specifications (onsite)		a	
	b	Inspect each individual I-joist		b	Generalized inspection method.
	c	Walk each room		c	Generalized inspection method.
	d	Shine flashlight on each one to focus attention		d	
	e	Use patterns to compare joists within the system		e	
	f	Look up at second level (especially under stacked loads)		f	
	g	Use ladder		g	
	h	View cavity between doubled I-joists		h	
	i	Use tape measure as a feeler gauge between doubled I-joists		i	
	j	Use mfr phone numbers/contact information during or after inspection		j	
	k	Identify (Spray paint) problem areas		k	
	l	Methodical		l	Consolidated. Added 'Systematic' from question 3m. General.
3	m	Systematic	3	m	Consolidated with 3 l. Method/systematic judged the same. General
	n	Up close		n	
	o	Don't use ladder		o	Other experts use ladders.
	p	Approved plans		p	Deleted. Plans could show engineered installation
	q	APA standards		q	Added to question 41 e. This is a source document, not a method.
	r	Plan review of documents		r	Deleted. Plans could show engineered installation
	s	Visual inspection		s	This is a given in the scope of the inspection project.
	t	Use manufacturer software		t	Deleted. Duplicate of 3 x below.
	u	Engineering specifications		u	Deleted. Engineered specifications are not prescriptive.
	v	Look for excessive deflection of floor system		v	
	w	inspect for blocking that is too short (installed after-the-fact)		w	
	x	Use manufacturer software		x	Moved to question 30f. Reference source, not a method.
	y	What appears to be a repair may actually be bracing		y	
	z	Plan documents submitted for plan review don't match what's used		z	Deleted. Plans could show engineered installation

	aa	Out of plumb		aa	Moved to question 2. Risk areas, not methods
	bb	Fasteners		bb	Moved to question 2. Risk areas, not methods
	cc	Blocking		cc	Moved to question 2. Risk areas, not methods
	dd	Flanges		dd	Moved to question 2. Risk areas, not methods
	ee	Web holes		ee	Moved to question 2. Risk areas, not methods
	ff	Hanger problems		ff	

6		What methods do you use/recommend to inspect LVLs and PSLs?			
6	a	No Response	6	a	Deleted. Does not provide any information.
	b	Check nails & bolts		b	
	c	Fastening patterns		c	
	d	Support		d	Moved to question 5hh. This is a risk area, not a method.
	e	Vertical load paths		e	Deleted here. General inspection method.
	f	Methodical		f	Consolidated. Added 'Systematic' from question 6 i. General.
	g	Systematic		g	Consolidated with 6h. Method/ systematic judged to be the same.
	h	Up close		h	Deleted here. General inspection method.
	i	Modifications		i	Moved to question 5gg. This is a risk area, not a method.
	j	Use ladders		j	
	k	Use manufacturer specifications		k	Deleted here. General inspection method.
	l	Inspect each one		l	Deleted here. General inspection method.
	m	Approved plans		m	Deleted. Plans could show engineered installation.
	n	No ladders		n	
	o	APA standards		o	Deleted. Moved to question 41 e. This is not a method.
	p	No plans and don't want them		p	Added. Moved from question 5e. Not a risk area. General.
	q	If review plans, sets up an unrealistic expectation for entire house		q	Added. Moved from question 5f. Not a risk area.

10		What methods do you use/recommend to inspect engineered rimjoists?			
10	a	Openings in foundation - headers	10	a	
	b	Measure rim headers for double thickness		b	
	c	Fastener problems		c	
	d	Methodical		d	Consolidated. Added 'Systematic' from question 10 e. General.
	e	Systematic		e	Consolidated with 3 l. Method/systematic judged the same. Deleted.
	f	Up close		f	
	g	Use ladder		g	
	h	Inspect each member - look at everything		h	Deleted here. Generalized inspection method.
	i	Vertical load path issues		i	Deleted here. Generalized inspection method.
	j	Go up and down to trace load paths		j	Moved to question 22a. Generalized inspection method.
	k	Use manufacturer information		k	Deleted here. Generalized inspection method.
	l	LOOK at it		l	Deleted here. Generalized inspection method.
	m	Make a 360 degree sweep inside		m	
	n	Look out/hang out windows		n	
	o	OK to have house wrap in place before the inspection		o	
	p	No response		p	Deleted. 'No response' provides no information.
	q	Visual inspection		q	Deleted. Generalized inspection method.
	r	Approved construction documents		r	Deleted. Plans could show engineered installation.
	s	APA standards		s	Moved to question 41 e. This is not a method.
	t	Lift house wrap if possible		t	

13		What methods do you use/recommend to inspect OSB wall and roof sheathing?			
	a	Look at exterior walls for bulging horizontally and vertically		a	
	b	Push on sheathing to see if loose, no deflection		b	Added. Moved from question 12f.
	c	Said requirement for tighter roof nailing pattern than for walls---?		c	Deleted. Not a method. Nailing patterns are the same per IRC.
	d	Check roof sheathing for problems like wall sheathing		d	
	e	Improper nailing edge and field,		e	
	f	Too large holes cut in sheathing		f	Deleted. Not a method. With question 12c.
	g	Use ladders		g	
	h	Use binoculars inside when needed		h	
	i	No response		i	Deleted. 'No response' provides no information.
	j	Roof and wall sheathing exterior inspection obstructed by wrap		j	Deleted. Duplicate of 13 u and v below.
13	k	If house wrap, must have an inspection before installation	13	k	
	l	Visual		l	Project given. Generalized method.
	m	Inspect during construction		m	Project given. Generalized method.
	n	Based on design and layout provisions, approved plans, mfr specs		n	Deleted. Not a method. Plans could show engineered installation.
	o	APA standards		o	Moved to question 41 e. This is not a method.
	p	Spot check on outside		p	
	q	Staple fasteners are hard to detect		q	Moved to question 12t. Not a method, is a risk area.
	r	Inspect for 'shiners'		r	
	s	Push against sheathing to see if properly nailed		s	Deleted. This is a duplicate of question 13 b above.
	t	Only inspect roof from exterior		t	Added. Moved from question 12d.
	u	Don't inspect roof sheathing - obstructed by roof covering		u	Added. Moved from question 12l.
	v	Don't inspect wall sheathing - obstructed by house wrap		v	Added. Moved from question 12m.

16		What methods do you use/recommend to inspect OSB subflooring?			
16	a	Check for level - both directions, crowns, defects	16	a	
	b	Methodical		b	Consolidated. Added 'Systematic' from question 16 d. Deleted here.
	c	Systematic		c	Consolidated with 16b. Method/systematic judged to be the same.
	d	Up close		d	Deleted here. General inspection method.
	e	Visual walkthrough		e	This is a project given. Generalized method.
	f	Use tables for nailing patterns		f	
	g	Use tables for spans		g	
	h	Inspect during construction		h	This is a project given. Generalized method.
	i	Based on design and layout provisions, approved plans, mfr specs		i	Deleted. Not a method. Plans could show engineered installation
	j	APA standards		j	Deleted. Moved to question 41 e. This is not a method.
	k	Dirt and debris can obstruct visual access		k	
	l	No response		l	Deleted. Response provides no information.
	m	Use ladders		m	
	n	Staple fasteners are hard to detect		n	Moved to question 15.

19		What methods do you use/recommend to inspect EWP hanger hardware?			
19	a	Manufacturer specifications	19	a	
	b	General knowledge		b	
	c	Plumb		c	
	d	Fasteners		d	
	e	Check every component		e	Generalized method.
	f	Use flashlight - focus attention		f	Generalized method.
	g	Use step ladder		g	
	h	Use binoculars inside (last resort)		h	
	i	Top-down		i	Generalized method.
	j	Get up and look at it		j	
	k	Visual inspection		k	This is a project given. Generalized method.
	l	Based on design and layout provisions, approved plans, mfr specs		l	Deleted. Not a method. Plans could show engineered installation.
	m	APA standards		m	Moved to question 41 g. This is not a method.
	n	Hanger types		n	Deleted. Duplicated in question 18.

21		What methods do you use/recommend to inspect MPCWTs?			
21	a	Walk through roof trusses if necessary/possible	21	a	
	b	Look up at trusses		b	
	c	From top level shine flashlight– sight each one, front/back,back/front		c	
	d	Check roof sheathing same time		d	
	e	Improper handling		e	Deleted. Duplicated in question 20.
	f	Floor trusses: Concentration of load, material dropping & storage		f	
	g	Open web floor trusses same as roof plus missing strongbacks		g	
	h	Check each component		h	Deleted here. Generalized method.
	i	Look for repairs - may be improperly repaired		i	
	j	Get up and look at it		j	Deleted here. Generalized method.
	k	Depends on individual case		k	
	l	Use design & layout provisions, approved plans, ANSI/TPI, Chap 3 IRC		l	Deleted. Not prescriptive.
	m	Per engineered specifications		m	Deleted. Engineered specifications are not prescriptive.
	n	APA standards		n	Deleted. Moved to question 41 e. This is not a method.
	o	Check bearing areas		o	
	p	Trusses replaced with dimension lumber		p	
	q	Pay particular attention to girder trusses		q	
	r	Use patterns to compare trusses within the system		r	
	s	Visual inspection		s	Project given. Generalized method.
	t	Fasteners		t	

23b		If so, what inspection methods do you recommend for each zone?			
	a	Top-down		a	Generalized method.
	b	Outside		b	
	c	Get as close as possible		c	
	d	Visual inspection per plans		d	Deleted here. Parameters of the project.
	e	Enter attic		e	
	f	Enter crawlspace		f	
	g	Be sure bracing is in place		g	
23b	h	Truss layout documents	23b	h	Moved to q 41 Not method, truss layout documents not prescriptive.
	i	Backwards truss installation		i	Deleted. Not a method. Already listed as risk area in question 21 r.
	j	Truss replaced with dimension lumber		j	Deleted. Not a method. Already listed as risk area in question 21 p.
	k	Room-by-room		k	
	l	Inspect outside first so as to not track mud inside		l	Added. Moved here from question 25 b.
	m	If really large, ask other inspectors to help out		m	Added. Moved here from question 25 b&c d.
	n	Do not enter attics		n	
	o	Do not enter crawlspaces		o	

22		Do you use or recommend a specific inspection plan? (Please refer to flowchart in survey questionnaire.)			
22	a	Yes	22	a	
	b	No		b	

22a		If so, what inspection plan strategy do you recommend? All Consolidated -New Consolidated Question 22a at End of Sheet.			
22 a	a	Inspect from street for general overview	22 a	a	
	b	View flat plane of roof, walls – buckled, bowed		b	
	c	Top down – follow load paths		c	Duplicate, Consolidated.
	d	Go through the attic (end-to-end and center if needed)		d	Duplicate, Consolidated.
	e	Use hammer and nails through subfloor to confirm vertical load paths		e	Duplicate, Consolidated.
	f	Foundation dips - floor system -need shimming, non-shrink grout		f	Moved. Added to risk areas in question 9p.
	g	Shims at direct alignment		g	Deleted. Duplicate. Already listed as risk area in question 15 o.
	h	Inspect each one		h	Duplicate, Consolidated.
	i	Sill plates overhanging foundation walls		i	Deleted. Duplicate. Listed as risk area in question 9k.
	j	Flowchart: eliminate steps to create software & interview quests		j	Deleted. Not a method.
	k	Draw bearing diagram - Vertical load paths		k	
	l	Up to individual inspector		l	
	m	Use truss layout documents		m	Moved to question 41. Truss layout documents are not prescriptive.
	n	Use multiple viewing angles		n	
	o	Must have manufacturers specifications onsite		o	
	p	Must have approved plans onsite		p	Deleted. Plans could show engineered installation.
	q	OSB or plywood on side of trusses indicate possible repairs		q	Duplicate, Consolidated.
	r	No 'T' bracing on webs		r	
	s	Point loads		s	
	t	Attic inspected from the top floor		t	
	u	Get as close as possible		u	
	v	Enter crawlspaces		v	
	w	Locate point loads		w	
	x	Backwards truss installation		x	Deleted. Duplicate. Already listed as risk area in question 21 r.
	y	Truss replaced with dimension lumber		y	Deleted. Duplicate. Already listed as risk area in

					question 21 p.
	z	Room-by-room		z	Duplicate, Consolidated.
	a a	Inspect for split load paths		a a	
	b b	Sizing of LVL headers		b b	Deleted. Engineering decision and not an inspection strategy.
	cc	Based on house scale and complexity		cc	
	d d	May use inspection teams if necessary		d d	
	e e	Do not enter attics		e e	Ignored. Other SMEs want these Those who don't can skip them.
	ff	Do not enter crawlspaces		ff	Ignored. Other SMEs want these Those who don't can skip them.
	g g	Go up and down to trace load paths		g g	Moved from question 10.
	h h	Do not use ladders outside at pre-drywall, can't tie off, uneven ground.		h h	
	ii	Methodical/Systematic		ii	Added from several questions above.

23		**Do you recommend using inspection zones?**			
23	a	Yes	**23**	a	
	b	No		b	

23a		If so, what inspection methods do you recommend for each zone?			
23a	a	Each level is a zone	23a	a	
	b	Each room is a zone		b	
	c	Each component is a zone		c	
	d	Outside is a zone		d	
	e	Top-down		e	Deleted. Duplicated in question 22a.
	f	Vertical load paths are zones		f	
	g	Up to the individual inspector		g	

24		What inspection standards do you work under, if any?			
24	a	Self-imposed standards	24	a	
	b	No other standards currently available		b	
	c	HIs - Will use ASHI Predrywall standards when available		c	
	d	i-Level pocket guide		d	
	e	HIs - Sometimes use truss drawings		e	Deleted. Project assumes prescriptive resources only.
	f	HIs - Don't look at blueprints, plans		f	Deleted. Project assumes prescriptive resources only.
	g	None		g	
	h	VA Construction code, VA Residential Code		h	Added VA residential code from question 24 i.
	i	VA Residential code		i	Moved. This is consolidated with question 24 h.
	j	IBC		j	
	k	IRC		k	
	l	Up to individual inspectors		l	

25		**Do you use different inspection methods for pre-drywall inspections based on weather conditions such as extreme heat, humidity, wind, or cold?**			
25	a	No	**25**	a	Moved to question 23b p .
	b	Inspect outside first so as to not track mud inside		b	
	c	Inspector must pace him/herself		c	
	d	Inspector must maintain good hydration		d	
	e	Might affect the length of time for the inspection		e	

26		**When performing a pre-drywall framing inspection, do you work under a time limitation?**			
26	a	No	**26**	a	

26a		**If yes, how long?**			
26a	a	Yes	**26a**	a	
	b	Not applicable		b	

26b, c		How much time do you believe is necessary to do a thorough pre-drywall inspection? Time per inspection in minutes?			
26b - 26c	a	Estimate 1 hour per 1,000 sf	26b - 26c	a	
	b	Estimate 15 minutes per 1,000 square feet (added 1-5-11 per B-10)		b	
	c	Minimum 3.5 hours regardless of sf		c	
	d	If really large, ask other inspectors to help out		d	Deleted. Moved to question 23b q.
	e	Whatever time it takes		e	
	f	2 - 5 hours for 1500-7000 sf house and some complex houses		f	
	g	2.5 - 3.5 hours plus office time		g	
	h	35 - 45 minutes		h	
	i	35 minutes - 3 hours, depending		i	
	j	Expertise of the builder		j	
	k	Familiarity with the builder's work		k	
	l	Production builders- inconsistent quality, may take longer to inspect		l	
	m	Size and complexity of structure may determine length of inspection		m	Moved to question 26d.
	n	Language barrier can affect time needed		n	
	o	One to two hours for 3000 - 5000 sf house		o	
	p	4 hours (includes office time to write up report)		p	Deleted. Duplicate of g above.

26d		Who determines the length of the time limitation?			
26d	a	Inspector	26d	a	Note that these responses contradict answers given in question 26.
	b	Client		b	Note that these responses contradict answers given in question 26.
	c	House - size and complexity		c	Note that these responses contradict answers given in question 26.
	d	Sometimes builder		d	Note that these responses contradict answers given in question 26.
	e	If needed, will come back later to finish		e	Note that these responses contradict answers given in question 26.
	f	Supervising field inspector		f	Note that these responses contradict answers given in question 26.

26e		On what basis is the time limitation determined?			
26e	a	Depends on client questions and interruptions	26e	a	Ignored. This factor may affect time onsite, not limit inspection time.
	b	Depends on house size and complexity		b	Ignored. This factor may affect time onsite, not limit inspection time.
	c	Contract contingency might affect time frame		c	

26f		Do you believe there is a relationship between the amount of time spent on an inspection and the number of non-compliant issues discovered?			
26 f	a	Yes	26 f	a	
	b	Diminishing returns after a certain amount of time		b	
	c	More experienced inspectors will find more problems		c	
	e	Experience and knowledge of the inspector is more important than time		e	
	f	The longer you look, the more problems found		e	
	g	HI says he can spend more time on site than a BCO		d	Deleted. Does not address the question.

27		When performing a pre-drywall framing inspection, do you begin with an assumption about whether some framing deficiencies exist?			
27	a	Yes	27	a	
	b	Defects will be found		b	
	c	Depends on jobsite supervisor - could be yes or no		c	
	d	Assumes the builder knows what to do		d	
	e	Know which builders/framers have adequate knowledge of EWPs		e	
	f	Production builders- inconsistent quality, may take longer to inspect		f	Added. Copied here from question 26 b&c l.
	g	Some framers 'never get it'		g	
	h	Up to the individual inspector		h	
	i	No		i	

28		When performing a pre-drywall framing inspection, from what distance do you recommend the inspected framing member be viewed?			
28	a	Depends on member, try to get as close as possible	28	a	Deleted. Duplicates answers given in question 28 a.
	b	Roof trusses could be 20 feet away		b	
	c	Floor trusses closer - ceiling height		c	
	d	5 - 10 feet if possible		d	
	e	If a problem is suspected, get within 2 feet		e	
	f	Use binoculars only if can't reach by climbing		f	
	g	Depends on member		g	
	h	Try to get as close as possible		h	
	i	10 - 15 feet roof and roof trusses from inside		i	
	j	6 feet height - should mean 2 - 3 feet		j	
	k	Close enough to inspect		k	
	l	Focus on problem areas more closely		l	
	m	Use ladder when needed		m	
	n	1 - 5 feet ideal, but may be 5 - 10 feet		n	

28a		When and where is it appropriate to use binoculars, if any?			
28a	a	Only to inspect roof from exterior	28a	a	
	b	Use binoculars on outside only		b	
	c	If component is that far away, get up and look at it		c	
	d	Use binoculars any time conditions require them		d	
	e	Use binoculars for gable sheathing		e	
	f	Only if framing is not reasonably accessible by climbing		f	
	g	Binoculars OK, not required		g	

29		What inspection tools do you recommend, if any (flashlight, ladder, tape measure, binoculars, level, etc.)?			
29	a	Flashlight	29	a	
	b	Tape measure		b	
	c	Folding wooden ruler - fold to 2 feet, use to inspect truss spacing		c	
	d	Torpedo level		d	Grouped level responses.
	e	Laser level		e	
	f	Longer level – 4’ or more - sometimes		f	
	g	Level - size not specified		g	
	h	No marking devices		h	
	i	Markers or lumber crayons		i	
	j	Camera		j	
	k	Clipboard & list		k	
	l	Ladder		l	
	m	Binoculars		m	
	n	Scratch awl, probe, screwdriver		n	
	o	Level - two feet		o	
	p	Magnifying glass		p	
	q	Gloves		q	
	r	Knee pads		r	
	s	Hard hat		s	
	t	Digital voice recorder		t	
	u	Laptop with internet card		u	
	v	Overalls		v	
	w	Safety shoes		w	
	x	Cell phone		x	

30		What reference materials or source documentation do you consider necessary for inspecting EWPs?			
30	a	Manufacturer specifications	30	a	
	b	APA standards		b	APA standards only apply to APA members, some mfrs not members.
	c	i-Level guide only		c	
	d	Approved plans		d	
	e	Layout and individual product specifications		e	
	f	Use manufacturer software		f	Deleted. Not prescriptive.
	g	Experience base of all inspectors and plan reviewers		g	
	h	ANSI/TPI		h	
	i	Look for engineering		i	

31		How important do you believe inspector enthusiasm for the inspection process is?			
31	a	High importance	31	a	
	b	People are human, have some bad days		b	
	c	Prefer the term 'engagement' to 'enthusiasm'		c	
	d	Interested in doing a good job		d	
	e	Difference between fault finding and education		e	

32		If you were to build your own residence at this time, would you prefer to use EWPs, solid sawn lumber, or some combination for structural framing?			
32	a	Engineered preferred	32	a	
	b	Dimension lumber		b	
	c	Combination		c	

33 - 34		Please review the inspection methods table and make corrections as you see fit. Can any of these methods be eliminated or consolidated?			
33-34	a	Combine roof I-joists 1 and 2	33-34	a	
	b	I-joist floor – look up method		b	
	c	Beams and columns: span, vertical support		c	
	d	Rimjoist methods combine		d	
	e	OSB sheathing – no roof top or exterior method – can't see		e	
	f	Floor OSB combine – top and bottom methods		f	
	g	MPCWT roof – combine		g	
	h	HH - combine		h	
	i	Roof I-joists - no attic		i	
	j	Rimjoists - can't see from outside - eliminate this method		j	
	k	MPCWT roof no attic method		k	
	l	No need for I-joist rimjoist method		l	
	m	For LVL & PSL beam/col add hangers, bearing, & concentrate loads		m	Deleted. Moved to question 5. High risk areas.
	n	Add OSB top level method for roof sheathing		n	
	o	I-joists - combine all		o	
	p	I-joist rim boards not used		p	
	q	I-joist rafters - combine		q	
	r	OSB wall sheathing - combine all		r	
	s	Most methods are not important to define		s	
	t	Table is not necessary		t	
	u	Up to individual inspector		u	
	v	Use multiple viewing angles		v	
	w	Get as close as possible to see		w	Generic inspection method - applies to all.
	x	MPCWT combine attic and top level		x	

35		Please review the code inspection process flowchart and make corrections as you see fit.			
35	a	Reverse items one and two	35	a	
	b	End goal is approval, not permit issued, was already done		b	
	c	Step one - Review plans		c	
	d	Step two - Apply for permit		d	
	e	Step three - Inspection request		e	
	f	If rejected, requires reinspection		f	
	g	Step one - Review plans		g	
	h	Step two - Issue permit		h	
	i	Step three - Inspection request		i	

36		Please review the post-home inspection flowchart and make corrections as you see fit.			
36	a	OK as is	36	a	No changes made. Every items was approved by at least one SME.
	b	Not necessary		b	
	c	Not sure about Realtor involvement		c	
	d	Rare that inspector is called back to review		d	
	e	No calls from dissatisfied buyers		e	
	f	Very rare to have legal counsel involved		f	
	g	If callback is required, usually as a result of HI inspection		g	
	h	Prefer not to get involved with disputes		h	
	i	Building department may receive an 'alert call' before inspection		i	
	j	If call comes in after the inspection - will reinspect if needed		j	

37		Please review the high-risk-for EWP non-compliance table and make corrections as you see fit.			
37	a	Add bearing to all OSB sheathing	37	a	Deleted here. Combined with 37 I below.
	b	Add holes to all OSBs		b	Suggested changes made.
	c	Add blocking to MPCWT		c	
	d	No need for column permanent bracing		d	Other SMEs wanted this left in.
	e	Rimjoists - can't see holes & notches , not offset from foundation		e	Suggested changes made.
	f	High risk areas - add damage due to shipping, handling, install		f	Suggested changes made.
	g	Delete permanent bracing for I-joists		g	Other SMEs wanted this left in.
	h	Missing proper wood connectors at piggy backs		h	Combined, Relocated. Duplicate of q 20d
	i	Subfloor must break properly on supporting members		i	
	j	No changes		j	

38		Please review the Table to identify the most common EWP manufacturers in your region, and make corrections as you see fit.			
38	a	Add Jager	38	a	
	b	Delete i-Level, GP, and LP for all OSB sheathing and subflooring		b	Deleted. Other SMEs wanted these brands.
	c	Add Boise		c	
	d	Add International Paper		d	Deleted. International Paper no longer manufacturers EWPs.
	e	Add Nordic		e	

39		Does the proposed methodology include all the important elements of a competent EWP inspection?			
39	a	Yes	39	a	Deleted. Not prescriptive.
		Important to have manufacturer layout			
		Important to have prescriptive specifications			

40		Is the proposed methodology based on appropriate assumptions?			
40	a	Yes	40	a	

41		What additional onboard reference material (knowledge base) do you think should be included in the software application?			
41	a	Manufacturer specifications	41	a	
	b	Generalized methodology		b	
	c	None at this time		c	
	d	Will bring in other lead inspectors to comment		d	
	e	Link to website from software		e	May not be feasible.
	f	Use truss layout documents		f	Deleted. Moved from q 22a. Truss layout documents not prescriptive.
	g	APA standards		e	Added. Moved from question 6.

42		What improvements to the methodology are needed, if any?			
42	a	No changes	42	a	
	b	Need standard inspector uses		b	
	c	Will bring in other lead inspectors to comment		c	
	d	Focus on how to make inspectors use it		d	Not a project objective.

43		What improvements to the software applications are needed, if any?			
43	a	No changes	43	a	
	b	Impressed		b	Interesting com, appears to be primarily related to the illustrations.
	c	Too much detail		c	Deleted. Other inspectors approved the detail in the software app.
	d	Must be accurate to manufacturer and series		d	
	e	Needs more time to review		e	All SMEs will be given time to review in advance of 2nd interview.
	f	EWP specifications for reporting and to remind inspector		f	
	g	Fast, easy, and simple to drill down to needed information		g	Taken under advisement, but usability is not a project objective.
	h	Suggest using free 30-day trial for review period		h	
	i	Think like an inspector		i	Taken under advisement, but usability is not a project objective.
	j	Must provide simple responses		j	

22a		If so, what inspection plan do you recommend?			
22a	a	Top-down inspection method	22a	a	
	b	Will inspect Pre-D with insulation in place		b	
	c	Inspect exterior bearing walls		c	
	d	Walk each room		d	
	e	Use patterns to inspect by		e	
	f	Concentrate on each component		f	
	g	Use mfr phone numbers		g	
	h	Look up needed info after the inspection		h	
	i	Email photos to mfr if needed		i	
	j	HIs - Don't contact code officials they may resist		j	Deleted. Out of Scope.
	k	Look up method at second level		k	
	l	Focus attention with flashlight even if illumination is not needed		l	
	m	Look for excessive deflection		m	
	n	Prefers no insulation in place		n	Deleted. Re states project parameter
	o	Cannot tell if the proper component was used !!!		o	
	p	Use vertical load path diagrams		p	
	q	Use spray paint or other indicator to ID problem locations		q	
	r	As-built with no plan references		r	
	s	Will use plans if available		s	
	t	Prefers no insulation in place		t	Deleted. Duplicate of n.
	u	Is the house square?		u	
	v	Do sill plates overhang the foundation wall?		v	
	w	Initial quick run through		w	
	x	Enter attic end-to-end, go to center depending on obstructions		x	
	y	Go up and down between levels to trace load paths & blocking		y	
	z	Look for repairs, there may be a break there		z	
	aa	Use ladders		aa	
	bb	Use term for inspectors - 'pre-responders'		bb	

	cc	Nails at sill plates are not well inspected		cc	
	dd	Do not climb on ladders - OSHA violation		dd	
	ee	Use a hammer and nails to identify load paths		ee	
	ff	Use multiple viewing angles		ff	
	gg	Get as close as possible to see		gg	
	hh	OK to have house wrap in place before inspection		hh	
	ii	If house wrap is installed, must have a separate inspect before		ii	
	jj	90% of homes can't be inspected by IRC alone, need values !!!		jj	
	kk	Enter crawlspaces		kk	
	ll	Inspect outside first to avoid tracking mud inside		ll	
	mm	Inspectors can't catch everything		mm	
	nn	Inspectors good at big stuff, not so good on important details		nn	
	oo	If a component is far away, get up close to look at it		nn	
	pp	Hard to find missing components		oo	
	qq	Lack of fasteners in field repairs		pp	
	rr	Inspectors need manufacturer specs onsite, not generic		qq	Added from Construction Issues
	ss	Use hierarchy of priorities for inspecting		rr	
	tt	Inspect from street for general overview		a	
	uu	View flat plane of roof, walls – buckled, bowed		b	
	vv	Draw bearing diagram - Vertical load paths		k	
	ww	Up to individual inspector		l	
	xx	Use multiple viewing angles		n	Consolidated responses from 22a and from comments made in general conversation.
	yy	Must have manufacturers specifications onsite		o	
	zz	No 'T' bracing on webs		r	
	a1	Point loads		s	
	b1	Attic inspected from the top floor		t	
	c1	Get as close as possible		u	
	d1	Enter crawlspaces		v	
	e1	Locate point loads		w	

	f1	Inspect for split load paths		aa	
	g1	Based on house scale and complexity		cc	
	h1	May use inspection teams if necessary		dd	
	i1	Do not enter attics		ee	
	j1	Do not enter crawlspaces		ff	
	k1	Do not use ladders outside at pre-drywall, can't tie off, uneven ground.		hh	

Appendix F: Final Reorganized Spreadsheet

Question #		Summary for all SMEs Generalized Responses are Combined in 22a
1		**What are the most common brands of I-joists used in your area?**
1	a	i-Level
	b	GP
	c	LP
	d	Jager
	e	Nordic
	f	Boise
4		**What are the most common brands of LVLs and PSLs used in your area?**
4	a	LP
	b	GP
	c	Jager
	e	i-Level
	f	Boise
	g	Nordic
8		**What common brands of engineered rimjoists used in your area?**
8	a	i-Level
	b	Usually the same brand as the floor system.
	c	GP
	d	LP
	e	Boise
	f	Nordic
	g	International Paper
	j	Jager
11		**What common brands of OSB wall & roof sheathing used in your area?**
11	a	GP
	b	LP
	c	i-Level
	d	Boise
	f	Don't really look at brands
	g	Other
	h	Whatever is on sale at the local lumber center

14		What common brands of OSB wall & roof sheathing in your area?
14	a	Advantech (Huber)
	b	LP
	c	GP
	f	i-Level
	g	Other
	h	Whatever is on sale at the local lumber center
17		What common brands of OSB wall and roof sheathing in your area?
17	a	SST
	b	USP

2		What common areas of prescriptive non-compliance w/I-joists?
2	a	Notches
	b	Web holes & too close
	c	Web hammer holes
	d	Cut, split chords, flanges
	e	Squash blocks - missing, short
	f	Blocking at cantilevers
	g	Handling, flat lifting
	h	Where joist orientation changes - side loaded doubles
	i	Fasteners
	j	Damage, modifications (may be caused by other trades)
	k	Hangers, wrong
	l	Lack of web stiffeners
	m	Out of plumb
	o	Weathering
	p	Bearing
	q	Attachment
	s	Fastening of doubled I-joists
	t	Improper repairs
	u	Improper angles or bird's mouth cuts
	v	Header applications
	w	Blocking
	x	Filler Blocking
	y	Point loads
	cc	Lack of proper nailing to sill plates, anchoring
	ff	Problems at interfaces with other materials
	gg	Moisture damage (evidenced by mud on materials)
	hh	Retrofitting details such as blocking

5		What are the common problems with LVLs, LSLs, and PSLs?
5	a	Cupped beams
	b	Beam splayed at fasteners - doesn't make full contact
	g	Modifications
	h	Notches
	i	Bearing
	j	Fasteners
	k	Drilling or cutting
	m	Concentrated loads
	n	Attachments
	o	Size of point load blocking (same footprint as columns)
	p	Support, size and number of jack studs
	s	Side load applications - (higher risk than top load applications)
	t	Appearance of structural problems
	u	Beams out of plumb
	v	Multiple member fastening
	w	Uplift protection
	x	Hanger hardware problems: wrong size, wrong type, mix up w/face &top
	y	Angle cuts
	z	Improper repairs (BCO12 repaired as if dimension lumber)
	bb	Sill plate compression
	cc	Prefer columns be run through subfloor and ceiling/floor cavity
	dd	Dropped headers
	ee	Blocking
	ff	Holes through beams and columns
	gg	Excessive floor deflection
	jj	If something is not there, can't tell that it is missing
	kk	Support
	ll	Stacked columns only toe-nailed
	mm	Wood columns embedded in concrete
	nn	Poor column-to-beam connection such as bent nails only

7		What common types of engineered rimjoists used in your area ?
7	b	I-joist rims
	c	No I-joist rims
	d	LSL
	e	Never see LVL rims
	f	1.25" rimjoist
	g	LVL
	j	1.125" rimjoist
9		**What are the common prblems with engineered rimjoists?**
9	a	No common occurrence
	b	Could have wrong thickness, but don't know for sure
	d	Headers over openings and I-joist support
	e	Bearing
	f	Damage
	g	Cut through rim boards and butt joints over foundation openings
	h	Use of OSB instead of rim board material
	i	Two pieces cut to fit - height
	j	Use of header material for rim boards
	k	Outboard framing overhanging foundation walls/plates
	l	Not bearing on top plates
	m	Lack of toe nailing into plates and subfloor
	n	Lack of blocking panels at cantilever bearing
	p	Foundation dips - floor system -need shimming, non-shrink grout

12		Common areas of prescriptive non-compliance w/ OSB wall and roof?
12	a	Improper nailing
	b	Improper sheathing spacing – should be 1/8 inches apart
	c	Trades cut too large holes for sheathing
	e	Use of 'H' clips
	g	Added blocks because sheathing doesn't break on support
	h	Damage
	i	Bearing
	j	Braced wall lines
	k	Blocking at sheathing butt joints
	n	Fastener spacing - field and edge
	o	Weather protection
	p	Deck & porch attachment
	q	Missing adhesives
	r	OSB material used as shims under bearing beams
	s	Missed nails using gun nails
	t	Staple fasteners are hard to detect
	u	Must use stainless steel fasteners with Fire Retardant Treated
	v	Lack of HDG nails into sill plates

15		Common areas of prescriptive non-compliance with OSB subflooring?
15	a	Crushing of t & g due to excessive force by pounding boards
	b	Nail/fastener problems - overdriven, missed nails, nailing pattern, etc.
	c	Warped or swelled wood
	d	Upside down – problem due to rough surface on top
	e	Unsealed edges when cut – can swell when wet
	f	Spacing too tight
	g	Raised fasteners
	h	Added blocks because sheathing doesn't break on support
	i	Delamination due to weathering
	j	Overspanning
	k	Lack of weather protection
	l	Damage
	m	Crowning
	n	Removing tongue at edges
	o	OSB material used as shims under bearing beams
	p	Staple fasteners are hard to detect

18		What are the common areas of poblems EWP hanger hardware?
18	a	Missing, wrong sizes & wrong type of hanger, too short member
	b	Gap at bearing in pocket
	c	Top strap hangers are spread into a 'V'. (Added face mount hangers.)
	d	Backer blocking
	e	Missing filler panels on both members
	f	HH pocket wider than supported member
	i	Improper nails (gun nail types, too large, too small, missing)
	j	Improper retrofit of top strap hangers
	k	Rusted hangers - improper coating
	l	Cut
	m	Web stiffeners
	n	Modifications.other trades, forced fit
	p	Fasteners improperly installed
	q	Wrong Screws in HH
	r	Inverted hangers
	t	Lumber yards tend to have poor selection of hangers for I-joists
	u	HH should be bought from the same distributor as floor system
	v	Gun nailing

20		What common areas of prescriptive non-compliance with MPCWTs?
20	a	Broken trusses
	b	Damaged gussets
	c	Leaning or bowed
	d	Missing proper blocking/bracing/wood connectors at piggy backs
	e	Permanent bracing
	f	Improper overlap at diagonal bracing
	g	Strong backs cut, not there or compromised
	i	Modifications
	j	Lack of diagonal bracing for compression webs
	n	Nailing/improper fastening
	o	Hangers
	q	Repairs - especially repetitive
	r	Backwards installation
	s	Attachment to plates
	t	Multi-ply girders - fastening
	u	Up lift provisions
	v	Improper handling
	x	Compound spans
	y	Interior bearing
	z	Bearing areas/missed bearing points

3		Methods used/recommend to discover I-joist problems?
3	a	Review manufacturer specifications (onsite)
	d	Shine flashlight on each one to focus attention
	e	Use patterns to compare joists within the system
	f	Look up at second level (especially under stacked loads)
	g	Use ladder
	h	View cavity between doubled I-joists
	i	Use tape measure as a feeler gauge between doubled I-joists
	j	Use mfr phone numbers/contact information during or after inspection
	k	Identify (Spray paint) problem areas
	n	Up close
	o	Don't use ladder
	v	Look for excessive deflection of floor system
	w	inspect for blocking that is too short (installed after-the-fact)
	y	What appears to be a repair may actually be bracing
	ff	Hanger problems

6		What methods do you use/recommend to inspect LVLs and PSLs?
6	b	Check nails & bolts
	c	Fastening patterns
	j	Use ladders
	n	No ladders
10		**What methods do you use/recommend to inspect engineered rimjoists?**
10	a	Openings in foundation - headers
	b	Measure rim headers for double thickness
	c	Fastener problems
	f	Up close
	g	Use ladder
	m	Make a 360 degree sweep inside
	n	Look out/hang out windows
	o	OK to have house wrap in place before the inspection
	t	Lift house wrap if possible

13		What methods use/recommend to inspect OSB wall and roof sheathing?
13	a	Look at exterior walls for bulging horizontally and vertically
	b	Push on sheathing to see if loose, no deflection
	d	Check roof sheathing for problems like wall sheathing
	e	Improper nailing edge and field,
	g	Use ladders
	h	Use binoculars inside when needed
	k	If house wrap, must have an inspection before installation
	p	Spot check on outside
	r	Inspect for 'shiners'
	t	Only inspect roof from exterior
	u	Don't inspect roof sheathing - obstructed by roof covering
	v	Don't inspect wall sheathing - obstructed by house wrap
16		**What methods do you use/recommend to inspect OSB subflooring?**
16	a	Check for level - both directions, crowns, defects
	f	Use tables for nailing patterns
	g	Use tables for spans
	k	Dirt and debris can obstruct visual access
	m	Use ladders

19		What methods do you use/recommend to inspect EWP HH?
19	a	Manufacturer specifications
	b	General knowledge
	c	Plumb
	d	Fasteners
	g	Use step ladder
	h	Use binoculars inside (last resort)
	j	Get up and look at it

21		What methods do you use/recommend to inspect MPCWTs?
21	a	Walk through roof trusses if necessary/possible
	b	Look up at trusses
	c	From top level shine flashlight– sight each one, front/back,back/front
	d	Check roof sheathing same time
	f	Floor trusses: Concentration of load, material dropping & storage
	g	Open web floor trusses same as roof plus missing strongbacks
	i	Look for repairs - may be improperly repaired
	k	Depends on individual case
	o	Check bearing areas
	p	Trusses replaced with dimension lumber
	q	Pay particular attention to girder trusses
	r	Use patterns to compare trusses within the system
	t	Fasteners
23b		**If so, what inspection methods do you recommend for each zone?**
23b	b	Outside
	c	Get as close as possible
	e	Enter attic
	f	Enter crawlspace
	g	Be sure bracing is in place
	k	Room-by-room
	n	Do not enter attics
	o	Do not enter crawlspaces
22		**Methods used or recommended for a specific inspection plan?**
22	a	Yes
	b	No

22a		If so, what inspection plan do you recommend? Responses consolidated from question 22a, and from information from general conversation.
22a	a	Top-down inspection method
	b	Will inspect Pre-D with insulation in place
	c	Inspect exterior bearing walls
	d	Walk each room
	e	Use patterns to inspect by
	f	Concentrate on each component
	g	Use mfr phone numbers
	h	Look up needed info after the inspection
	i	Email photos to mfr if needed
	k	Look up method at second level
	l	Focus attention with flashlight even if illumination is not needed
	m	Look for excessive deflection
	o	Cannot tell if the proper component was used !!!
	p	Use vertical load path diagrams
	q	Use spray paint or other indicator to ID problem locations
	r	As-built with no plan references
	s	Will use plans if available
	u	Is the house square?
	v	Do sill plates overhang the foundation wall?
	w	Initial quick run through
	x	Enter attic end-to-end, go to center depending on obstructions
	y	Go up and down between levels to trace load paths & blocking
	z	Look for repairs, there may be a break there
	aa	Use ladders
	bb	Use term for inspectors - 'pre-responders'
	cc	Nails at sill plates are not well inspected
	dd	Do not climb on ladders - OSHA violation
	ee	Use a hammer and nails to identify load paths
	ff	Use multiple viewing angles
	gg	Get as close as possible to see
	hh	OK to have house wrap in place before inspection
	ii	If house wrap is installed, must have a separate inspect before
	jj	90% of homes can't be inspected by IRC alone, need values !!!
	kk	Enter crawlspaces
	ll	Inspect outside first to avoid tracking mud inside
	mm	Inspectors can't catch everything
	nn	Inspectors good at big stuff, not so good on important details

	oo	If a component is far away, get up close to look at it
	pp	Hard to find missing components
	qq	Lack of fasteners in field repairs
	rr	Inspectors need manufacturer specs onsite, not generic
	ss	Use hierarchy of priorities for inspecting
	tt	Inspect from street for general overview
	uu	View flat plane of roof, walls – buckled, bowed
	vv	Draw bearing diagram - Vertical load paths
	ww	Up to individual inspector
	xx	Use multiple viewing angles
	yy	Must have manufacturers specifications onsite
	zz	No 'T' bracing on webs
	a1	Point loads
	b1	Attic inspected from the top floor
	c1	Get as close as possible
	d1	Enter crawlspaces
	e1	Locate point loads
	f1	Inspect for split load paths
	g1	Based on house scale and complexity
	h1	May use inspection teams if necessary
	i1	Do not enter attics
	j1	Do not enter crawlspaces
	k1	If really large, ask other inspectors to help out
	l1	Do not use ladders outside at pre-drywall, can't tie off, uneven ground.

23		**Do you recommend using inspection zones?**
23	a	Yes
	b	No
23a		**If so, what inspection methods do you recommend for each zone?**
23a	a	Each level is a zone
	b	Each room is a zone
	c	Each component is a zone
	d	Outside is a zone
	f	Vertical load paths are zones
	g	Up to the individual inspector
24		**What inspection standards do you work under, if any?**
24	a	Self-imposed standards
	b	No other standards currently available
	c	HIs - Will use ASHI Predrywall standards when available
	d	i-Level pocket guide
	g	None
	h	VA Construction code, VA Residential Code
	j	IBC
	k	IRC
	l	Up to individual inspectors
25		**se different inspection methods for poor weather conditions?**
25	a	No
	c	Inspector must pace him/herself
	d	Inspector must maintain good hydration
	e	Might affect the length of time for the inspection
26		**When doing a pre-drywall inspection, do you use a time limitation?**
26	a	No
26a		**If yes, how long?**
26a	a	Yes
	b	Not applicable

26b, c		Time necessary to do a pre-drywall inspection? Time in minutes?
26b - 26c	a	Estimate 1 hour per 1,000 sf
	b	Estimate 15 minutes per 1,000 square feet (added 1-5-11 per B-10)
	c	Minimum 3.5 hours regardless of sf
	e	Whatever time it takes
	f	2 - 5 hours for 1500-7000 sf house and some complex houses
	g	2.5 - 3.5 hours plus office time
	h	35 - 45 minutes
	i	35 minutes - 3 hours, depending
	j	Expertise of the builder
	k	Familiarity with the builder's work
	l	Production builders- inconsistent quality, may take longer to inspect
	n	Language barrier can affect time needed
	o	One to two hours for 3000 - 5000 sf house
26d		**Who determines the length of the time limitation?**
26d	a	Inspector
	b	Client
	c	House - size and complexity
	d	Sometimes builder
	e	If needed, will come back later to finish
	f	Supervising field inspector
26e		**On what basis is the time limitation determined?**
26e	c	Contract contingency might affect time frame
26f		**Relationship between inspection time & problems discovered?**
26f	a	Yes
	b	Diminishing returns after a certain amount of time
	c	More experienced inspectors will find more problems
	e	Experience and knowledge of the inspector is more important than time
	f	The longer you look, the more problems found

27		Assumptions about whether framing deficiencies exist?
27	a	Yes
	b	Defects will be found
	c	Depends on jobsite supervisor - could be yes or no
	d	Assumes the builder knows what to do
	e	Know which builders/framers have adequate knowledge of EWPs
	f	Production builders- inconsistent quality, may take longer to inspect
	g	Some framers 'never get it'
	h	Up to the individual inspector
	i	No
28		**What distance do you view the inspected framing member?**
28	a	Depends on member, try to get as close as possible
	b	Roof trusses could be 20 feet away
	c	Floor trusses closer - ceiling height
	d	5 - 10 feet if possible
	e	If a problem is suspected, get within 2 feet
	f	Use binoculars only if can't reach by climbing
	h	Try to get as close as possible
	i	10 - 15 feet roof and roof trusses from inside
	j	6 feet height - should mean 2 - 3 feet
	k	Close enough to inspect
	l	Focus on problem areas more closely
	m	Use ladder when needed
	n	1 - 5 feet ideal, but may be 5 - 10 feet
28a		**When and where is it appropriate to use binoculars, if any?**
28a	a	Only to inspect roof from exterior
	b	Use binoculars on outside only
	c	If component is that far away, get up and look at it
	d	Use binoculars any time conditions require them
	e	Use binoculars for gable sheathing
	f	Only if framing is not reasonably accessible by climbing
	g	Binoculars OK, not required

29		What tools do you use (flashlight, ladder, tape measure, level, etc.)?
29	a	Flashlight
	b	Tape measure
	c	Folding wooden ruler - fold to 2 feet, use to inspect truss spacing
	d	Torpedo level
	e	Laser level
	f	Longer level – 4’ or more - sometimes
	g	Level - size not specified
	h	No marking devices
	i	Markers or lumber crayons
	j	Camera
	k	Clipboard & list
	l	Ladder
	m	Binoculars
	n	Scratch awl, probe, screwdriver
	o	Level - two feet
	p	Magnifying glass
	q	Gloves
	r	Knee pads
	s	Hard hat
	t	Digital voice recorder
	u	Laptop with internet card
	v	Overalls
	w	Safety shoes
	x	Cell phone

30		What reference materials do need for inspecting EWPs?
30	a	Manufacturer specifications
	b	APA standards
	c	i-Level guide only
	d	Approved plans
	e	Layout and individual product specifications
	g	Experience base of all inspectors and plan reviewers
	h	ANSI/TPI
	i	Look for engineering

31		How important is inspector enthusiasm for the inspection process?
31	a	High importance
	b	People are human, have some bad days
	c	Prefer the term 'engagement' to 'enthusiasm'
	d	Interested in doing a good job
	e	Difference between fault finding and education
32		**Your residence: you use EWPs, solid sawn lumber, or combination?**
32	a	Engineered preferred
	b	Dimension lumber
	c	Combination

33 - 34		The inspection methods table. Can methods be eliminated or merged?
33 - 34	a	Combine roof I-joists 1 and 2
	b	I-joist floor – look up method
	c	Beams and columns: span, vertical support
	d	Rimjoist methods combine
	e	OSB sheathing – no roof top or exterior method – can't see
	f	Floor OSB combine – top and bottom methods
	g	MPCWT roof – combine
	h	HH - combine
	i	Roof I-joists - no attic
	j	Rimjoists - can't see from outside - eliminate this method
	k	MPCWT roof no attic method
	l	No need for I-joist rimjoist method
	n	Add OSB top level method for roof sheathing
	o	I-joists - combine all
	p	I-joist rim boards not used
	q	I-joist rafters - combine
	r	OSB wall sheathing - combine all
	s	Most methods are not important to define
	t	Table is not necessary
	u	Up to individual inspector
	v	Use multiple viewing angles
	w	Get as close as possible to see
	x	MPCWT combine attic and top level

35		Please review the code inspection process flowchart and correct.
35	a	Reverse items one and two
	b	End goal is approval, not permit issued, was already done
	c	Step one - Review plans
	d	Step two - Apply for permit
	e	Step three - Inspection request
	f	If rejected, requires reinspection
	g	Step one - Review plans
	h	Step two - Issue permit
	i	Step three - Inspection request
36		**Please review the post-home inspection flowchart and correct.**
36	a	OK as is
	b	Not necessary
	c	Not sure about Realtor involvement
	d	Rare that inspector is called back to review
	e	No calls from dissatisfied buyers
	f	Very rare to have legal counsel involved
	g	If callback is required, usually as a result of HI inspection
	h	Prefer not to get involved with disputes
	i	Building department may receive an 'alert call' before inspection
	j	If call comes in after the inspection - will reinspect if needed

37		Please review the high-risk-for EWP non-compliance table and correct.
37	b	Add holes to all OSBs
	c	Add blocking to MPCWT
	d	No need for column permanent bracing
	e	Rimjoists - can't see holes & notches , not offset from foundation
	f	High risk areas - add damage due to shipping, handling, install
	i	Subfloor must break properly on supporting members
	j	No changes

38		Table identifies EWP manufacturers, make corrections as you see fit.
38	a	Add Jager
	c	Add Boise
	e	Add Nordic

39		**Does the methodology have all important aspects of EWP inspection?**
39	a	Yes Important to have prescriptive specifications
40		**Is the proposed methodology based on appropriate assumptions?**
40	a	Yes
41		**What onboard reference material should be included in the software?**
41	a b c d e g	Manufacturer specifications Generalized methodology None at this time Will bring in other lead inspectors to comment Link to website from software Applicable sections of APA standards
42		**What improvements to the methodology are needed, if any?**
42	a b c	No changes Need standard inspector uses Will bring in other lead inspectors to comment
43		**What improvements to the software applications are needed, if any?**
43	a b d f g h i j	No changes Impressed Must be accurate to manufacturer and series EWP specifications for reporting and to remind inspector Fast, easy, and simple to drill down to needed information Suggest using free 30-day trial for review period Think like an inspector Must provide simple responses

Appendix G: Boise Cascade Details

Boise AllJoist Brick Ledge Cantilever

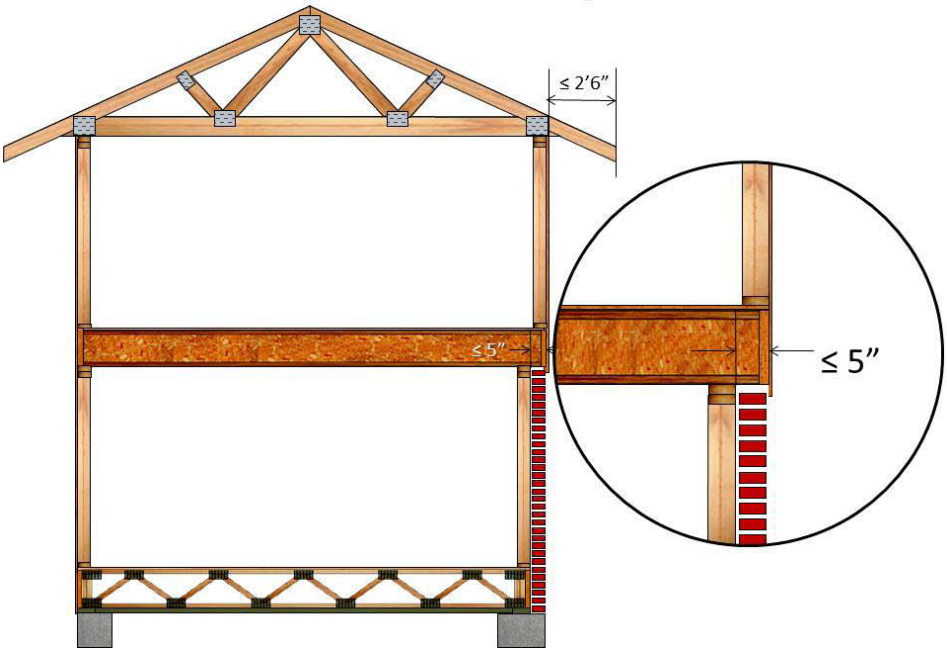

Material in Appendix G used under fair use guidelines, 2011. Illustrations and tables were rendered by the author. Source documentation may be found at http://www.bc.com/bmd/product.html and http://www.strongtie.com/ftp/csg/CSG-BC09.pdf.

Boise AllJoist Bearing Cantilever

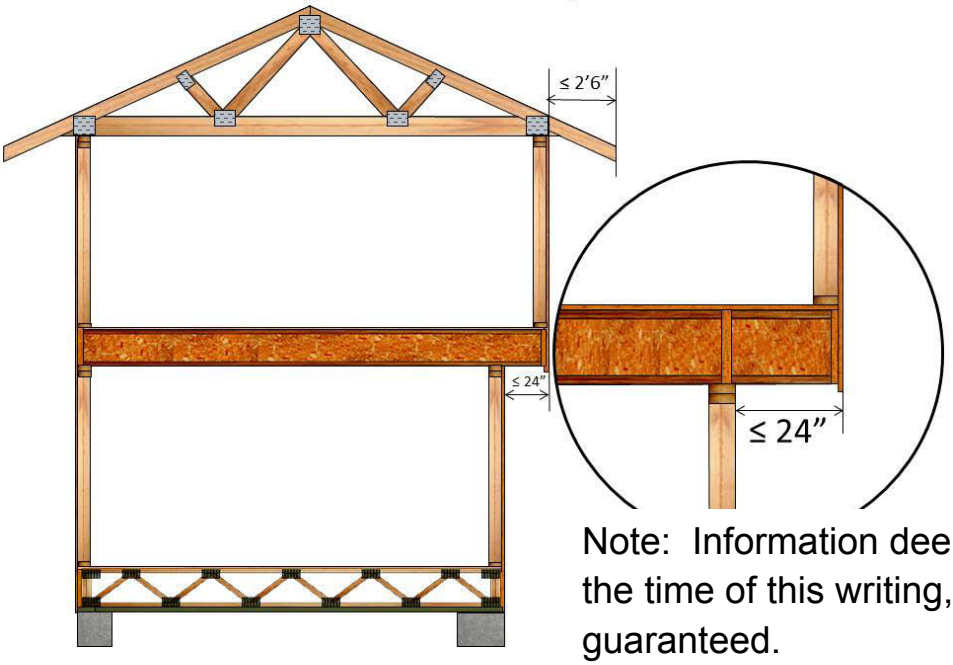

Note: Information deemed reliable at the time of this writing, not guaranteed.

AJS Brick Ledge Cantilever

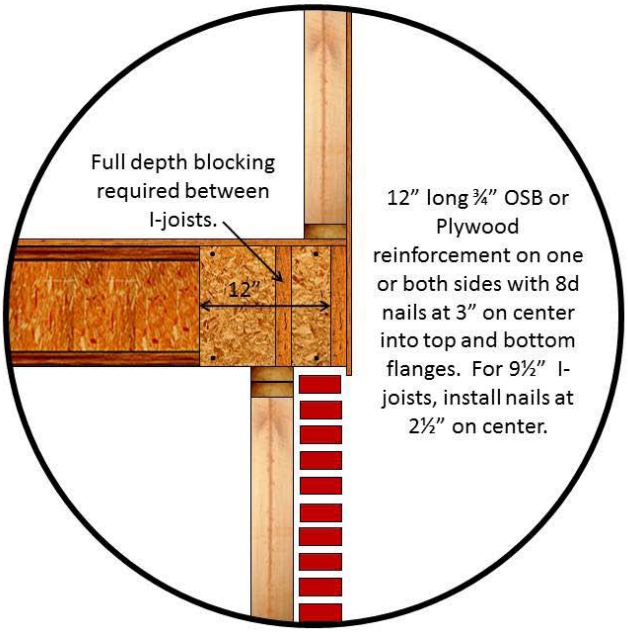

Bearing Cantilever With Blocking Panels

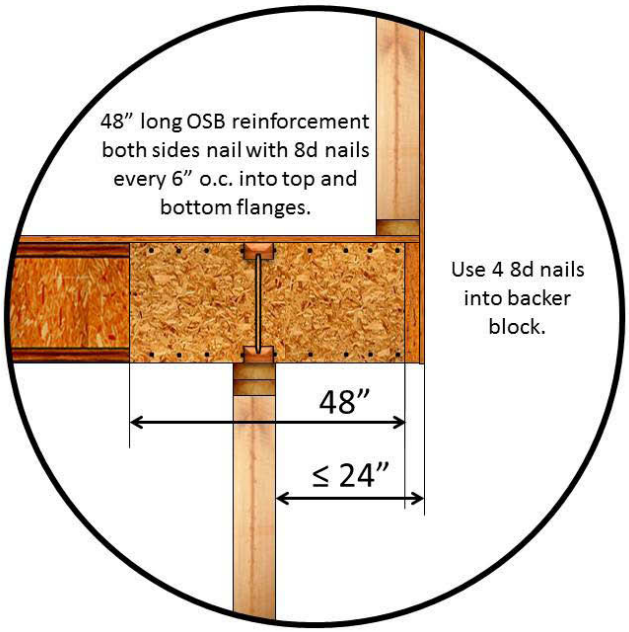

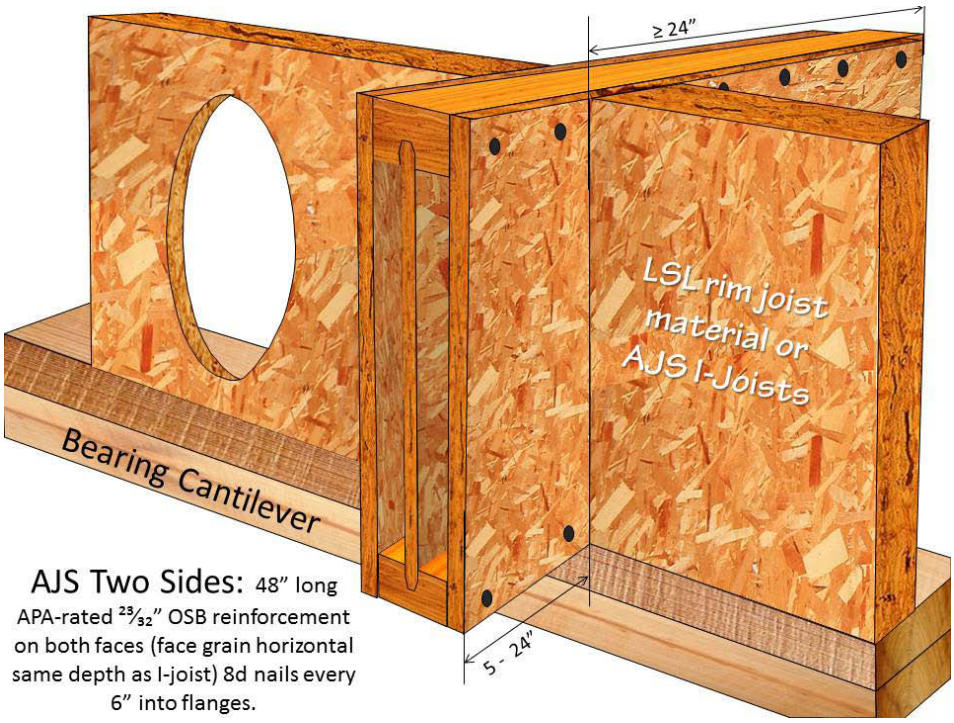

AJS Two Sides: 48" long APA-rated 23/32" OSB reinforcement on both faces (face grain horizontal same depth as I-joist) 8d nails every 6" into flanges.

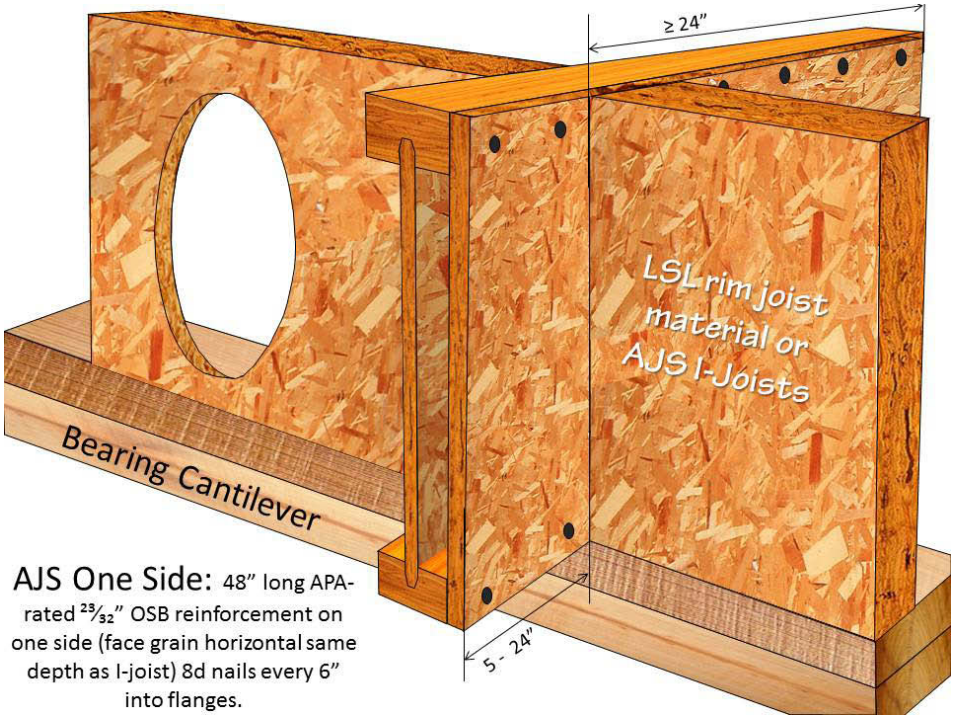

AJS One Side: 48" long APA-rated 23/32" OSB reinforcement on one side (face grain horizontal same depth as I-joist) 8d nails every 6" into flanges.

Hole Charts Boise AllJoist® I-joists AJS® 140, AJS® 20

All dimensions shown are the minimum distances (D) from support to the centerline of the hole.

Round Hole Diameter (in.)			**2**	**3**	**4**	**5**	**6**	**6½**	**7**	**8**	**8⁷⁄₈**	**9**	**10**	**11**	**12**	**13**
Rectangular Hole Side (in.)			**N/A**	**N/A**	**2**	**4**	**6**	**6**	**N/A**	**N/A**	**N/A**	**N/A**	**N/A**	**N/A**	**N/A**	**N/A**
Any 9½" Joist	**Span (ft)**	**8**	2'-3"	2'-8"	3'-1"	3'-6"	4'-0"	4'-0"	N/A	N/A	N/A	N/A	N/A	N/A	N/A	N/A
		12	3'-5"	4'-0"	4'-8"	5'-4"	6'-0"	6'-0"	N/A	N/A	N/A	N/A	N/A	N/A	N/A	N/A
		16	4'-6"	5'-5"	6'-3"	7'-1"	8'-0"	8'-0"	N/A	N/A	N/A	N/A	N/A	N/A	N/A	N/A

Round Hole Diameter (in.)			**2**	**3**	**4**	**5**	**6**	**6½**	**7**	**8**	**8⁷⁄₈**	**9**	**10**	**11**	**12**	**13**
Rectangular Hole Side (in.)			**N/A**	**N/A**	**N/A**	**2**	**3**	**4**	**5**	**7**	**8**	**N/A**	**N/A**	**N/A**	**N/A**	**N/A**
Any 11⁷⁄₈" Joist	**Span (ft)**	**8**	1'-7"	1'-11"	2'-4"	2'-8"	3'-0"	3'-3"	3'-5"	3'-9"	4'-0"	N/A	N/A	N/A	N/A	N/A
		12	2'-5"	2'-11"	3'-6"	4'-0"	4'-7"	4'-10"	5'-1"	5'-8"	6'-0"	N/A	N/A	N/A	N/A	N/A
		16	3'-2"	3'-11"	4'-8"	5'-4"	6'-1"	6'-6"	6'-10"	7'-7"	8'-0"	N/A	N/A	N/A	N/A	N/A
		20	4'-0"	4'-11"	5'-10"	6'-9"	7'-8"	8'-1"	8'-6"	9'-5"	10'-0"	N/A	N/A	N/A	N/A	N/A

Round Hole Diameter (in.)			**2**	**3**	**4**	**5**	**6**	**6½**	**7**	**8**	**8⁷⁄₈**	**9**	**10**	**11**	**12**	**13**
Rectangular Hole Side (in.)			**N/A**	**N/A**	**N/A**	**N/A**	**2**	**3**	**3**	**5**	**6**	**6**	**8**	**9**	**N/A**	**N/A**
Any 14" Joist	**Span (ft)**	**8**	1'-1"	1'-5"	1'-9"	2'-1"	2'-5"	2'-7"	2'-8"	3'-0"	3'-4"	3'-4"	3'-8"	4'-0"	N/A	N/A
		12	1'-8"	2'-2"	2'-8"	3'-1"	3'-7"	3'-10"	4'-1"	4'-7"	5'-0"	5'-0"	5'-6"	6'-0"	N/A	N/A
		16	2'-3"	2'-11"	3'-6"	4'-2"	4'-10"	5'-2"	5'-5"	6'-1"	6'-8"	6'-9"	7'-4"	8'-0"	N/A	N/A
		20	2'-10"	3'-7"	4'-5"	5'-3"	6'-0"	6'-5"	6'-10"	7'-7"	8'-4"	8'-5"	9'-3"	10'-0"	N/A	N/A
		24	3'-5"	4'-4"	5'-4"	6'-3"	7'-3"	7'-9"	8'-2"	9'-2"	10'-0"	10'-1"	11'-1"	12'-0"	N/A	N/A

Source: Boise AllJoist® Specifier Guide. ASG 10/16/2009.

Round Hole Diameter (in.)			2	3	4	5	6	6½	7	8	8⁷/₈	9	10	11	12	13
Rectangular Hole Side (in.)			N/A	N/A	N/A	N/A	N/A	N/A	2	3	5	5	6	8	9	10
Any 16" Joist	Span (ft)	8	1'-0"	1'-1"	1'-4"	1'-7"	1'-11"	2'-1"	2'-2"	2'-6"	2'-9"	2'-9"	3'-1"	3'-4"	3'-8"	3'-11"
		12	1'-2"	1'-7"	2'-0"	2'-5"	2'-11"	3'-1"	3'-4"	3'-9"	4'-1"	4'-2"	4'-7"	5'-1"	5'-6"	5'-11"
		16	1'-7"	2'-1"	2'-8"	3'-3"	3'-10"	4'-2"	4'-5"	5'-0"	5'-6"	5'-7"	6'-2"	6'-9"	7'-4"	7'-11"
		20	1'-11"	2'-8"	3'-5"	4'-1"	4'-10"	5'-2"	5'-7"	6'-3"	6'-11"	7'-0"	7'-9"	8'-5"	9'-2"	9'-11"
		24	2'-4"	3'-2"	4'-1"	4'-11"	5'-10"	6'-3"	6'-8"	7'-6"	8'-3"	8'-5"	9'-3"	10'-2"	11'-0"	11'-10"
Source: Boise AllJoist® Specifier Guide. ASG 10/16/2009.																

Boise AllJoist® I-Joist Basics

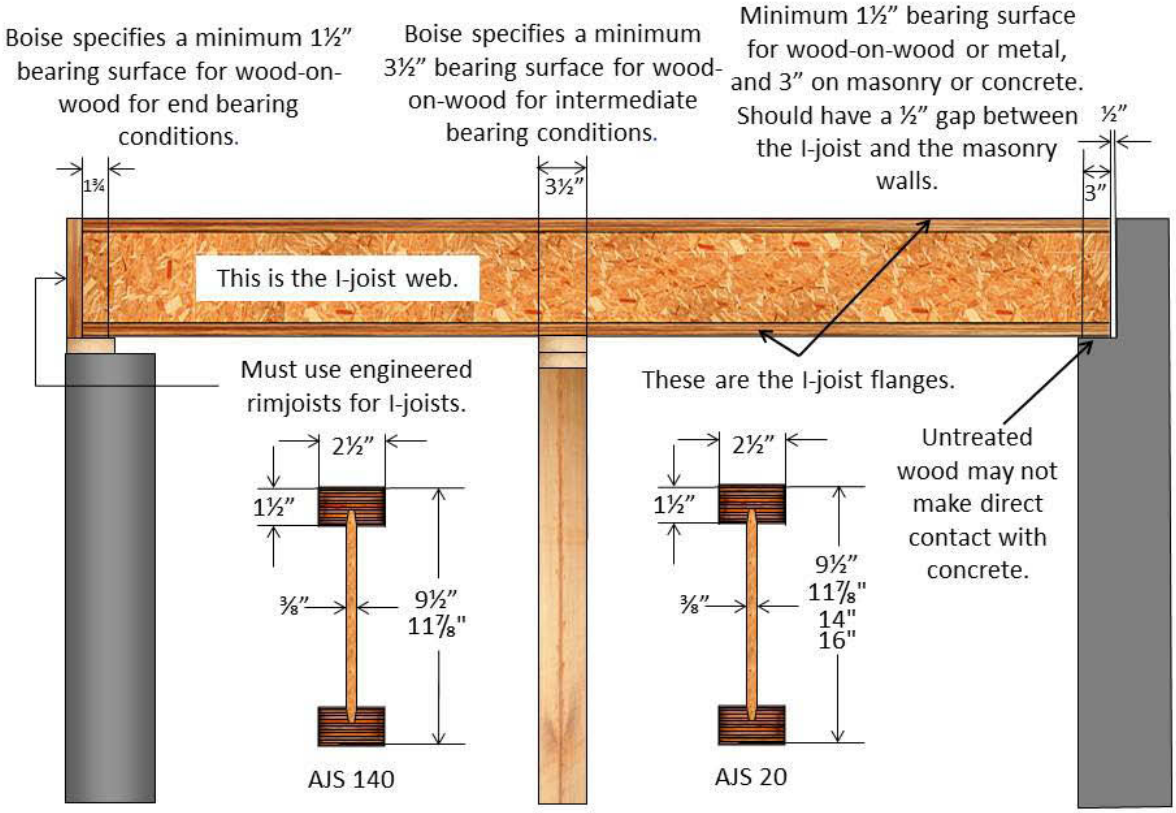

Source: AllJoist Specifier Guide 10/15/09

Boise AllJoist® Hole Charts

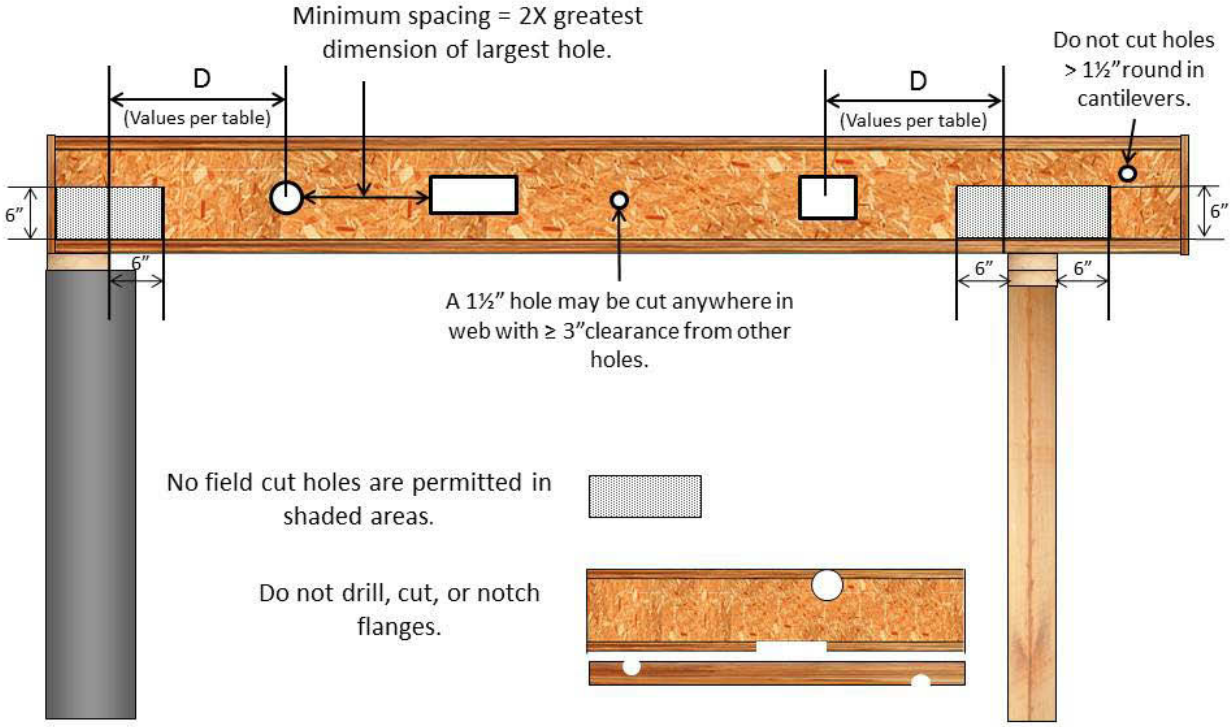

Source: AllJoist Specifier Guide 10/15/09

Boise AllJoist® Large Rectangular Hole Charts

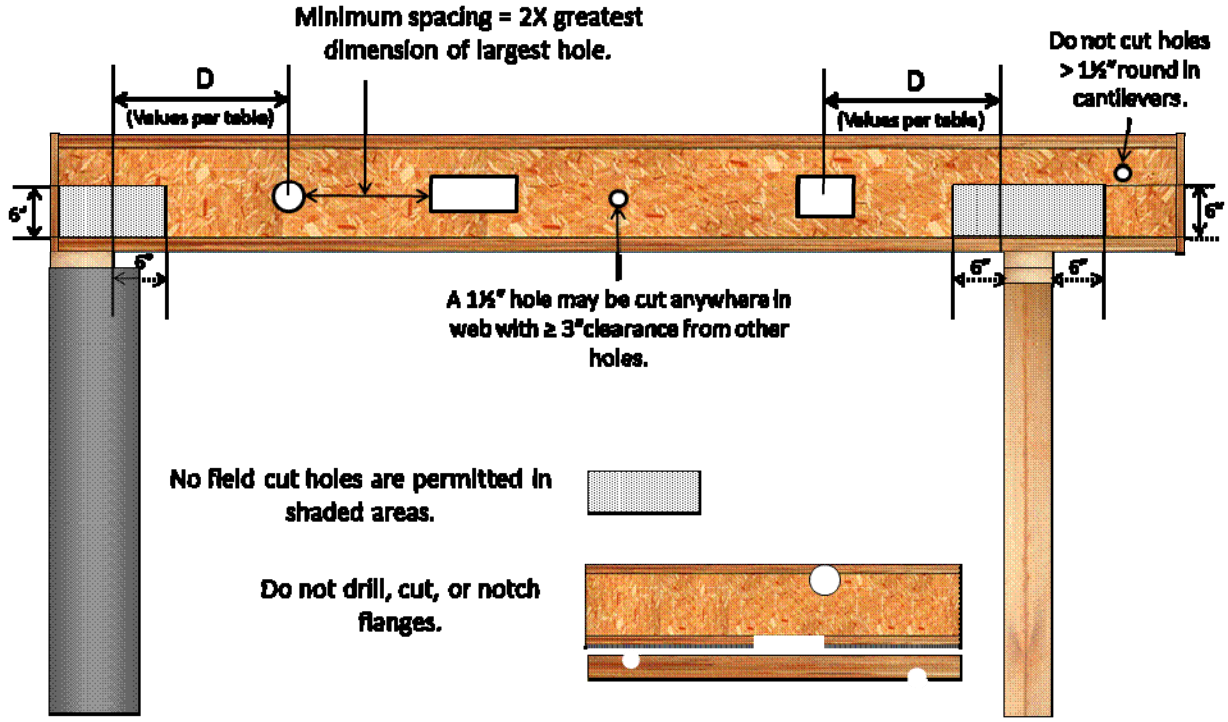

Source: AllJoist Specifier Guide 10/15/09

2X blocking required at bearing; 23/32" min. plywood/OSB rated sheathing needed for reinforcement, installed with face grain horizontal. ¼" gap between reinforcement and bottom of top flange. Apply construction adhesive to contact surfaces, fasten with three rows of 10d nails (min) at 6" o.c. with an alternating pattern from each side. Nails shall be clinched.

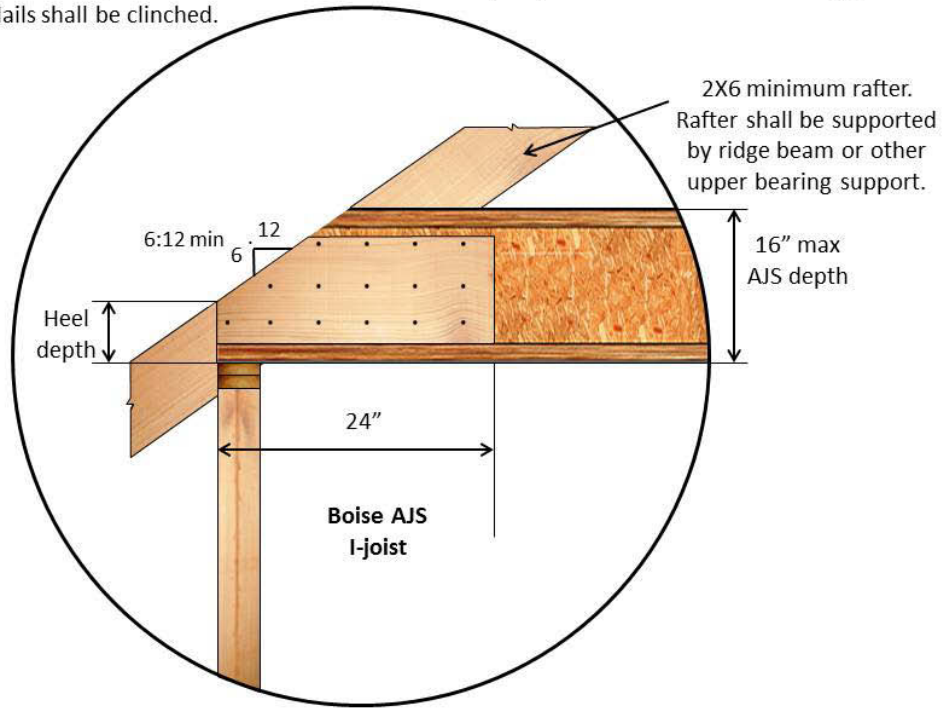

Selected I-joist Hanger Models: Boise AllJoist® I-Joist Series							
Single Joist Hangers: Simpson Strong-Tie (SST)							
Joist Series	Joist Depth	Face Mount	Nailing		Top Mount	Nailing	
			Header	Joist		Header	Joist
AJS 140 AJS 20	9½"	IUS2.56/9.5	10d	N/A	ITS2.56/9.5	10d	N/A
	11⅞"	IUS2.56/11.88	10d	N/A	ITS2.56/11.88	10d	N/A
	14"	IUS2.56/14	10d	N/A	ITS2.56/14	10d	N/A
	16"	IUS2.56/16	10d	N/A	ITS2.56/16	10d	N/A
AJS 25	9½"	IUS3.56/9.5	10d	N/A	ITS3.56/9.5	10d	N/a
	11⅞"	IUS3.56/11.88	10d	N/A	ITS3.56/11.88	10d	N/A
	14"	IUS3.56/14	10d	N/A	ITS3.56/14	10d	N/A
	16"	IUS3.56/16	10d	N/A	ITS3.56/16	10d	N/A

Selected I-joist Hanger Models: Boise AllJoist® I-Joist Series							
Double Joist Hangers: Simpson Strong-Tie (SST)							
Joist Series	Joist Depth	Face Mount	Nailing		Top Mount	Nailing	
			Header	Joist		Header	Joist
AJS 140 AJS 20	9½"	MIU5.12/9	16d	10d X 1½"	MIT39.5-2	16d	10d X 1½"
	11⅞"	MIU5.12/11	16d	10d X 1½"	MIT311.88-2	16d	10d X 1½"
	14"	MIU5.12/14	16d	10d X 1½"	MIT314-2	16d	10d X 1½"
	16"	MIU5.12/16	16d	10d X 1½"	MIT5.12-2	16d	10d X 1½"
AJS 25	9½"	***HU410-2***	16d	16d	***B7.12/9.5***	16d	16d
	11⅞"	***HU412-2***	16d	16d	***B7.12/11.88***	16d	16d
	14"	***HU414-2***	16d	16d	***B7.12/14***	16d	16d
	16"	***HU414-2***	16d	16d	***B7.12/16***	16d	16d
Bold Italic Hangers Need Web Stiffeners							
Use sloped seat connectors and beveled web stiffeners when joist slope exceeds ¼" per foot.							
Leave 1/16" clearance (⅛" maximum) between the end of supported joist and head of the hanger.							
Support material must be Boise structural composite lumber, Douglas fir, or Southern pine species.							
Minimum support width for single-and double-joist top mount hangers is 3" (1½" for THO hangers).							
Minimum support width for face mount hangers with 10d and 16d nails is 1¾" and 2" respectively.							
16d nails = 0.162" dia. X 3½" long. 10d nails = 0.148" dia. X 3" long. 10d X 1½" nails = 0.148" dia. X 1½" long.							
Source: Boise Cascade AllJoist® Specifier Guide. October 16, 2009.							

Selected I-joist Hanger Models: Boise AllJoist® I-Joist Series							
Single Joist Hangers: United Steel Products (USP)							
Joist Series	Joist Depth	Face Mount	Nailing		Top Mount	Nailing	
			Header	Joist		Header	Joist
AJS 140 AJS 20	9½"	THF25925	10d	10d X 1½"	TFL295	10d	10d X 1½"
	11⅞"	THF25112	10d	10d X 1½"	TFL25118	10d	10d X 1½"
	14"	THF25140	10d	10d X 1½"	TFL2514	10d	10d X 1½"
	16"	THF25160	10d	10d X 1½"	TFL2516	10d	10d X 1½"
AJS 25	9½"	THF35925	10d	10d X 1½"	THO35950	10d	10d X 1½"
	11⅞"	THF35112	10d	10d X 1½"	THO35118	10d	10d X 1½"
	14"	THF35140	10d	10d X 1½"	THO35140	10d	10d X 1½"
	16"	THF35157	10d	10d X 1½"	THO35160	10d	10d X 1½"

Selected I-joist Hanger Models: Boise AllJoist® I-Joist Series							
Double Joist Hangers: United Steel Products (USP)							
Joist Series	Joist Depth	Face Mount	Nailing		Top Mount	Nailing	
			Header	Joist		Header	Joist
AJS 140 AJS 20	9½"	***THF25925-2***	16d	10d	***THO25950-2***	16d	10d
	11⅞"	***THF25118-2***	16d	10d	***THO25118-2***	16d	10d
	14"	***THF25140-2***	16d	10d	***THO25140-2***	16d	10d
	16"	***THF25160-2***	16d	10d	***THO25160-2***	16d	10d
AJS 25	9½"	***HD7100***	16d	10d	***BPH7195***	16d	10d
	11⅞"	***HD7120***	16d	10d	***BPH71118***	16d	10d
	14"	***HD7140***	16d	10d	***BPH7114***	16d	10d
	16"	***HD7160***	16d	10d	***BPH7116***	16d	10d
Bold Italic Hangers Need Web Stiffeners							
Use sloped seat connectors and beveled web stiffeners when joist slope exceeds ¼" per foot.							
Leave 1/16" clearance (1/8" maximum) between the end of supported joist and head of the hanger.							
Support material must be Boise structural composite lumber, Douglas fir, or Southern pine species.							
Minimum support width for single-and double-joist top mount hangers is 3" (1½" for THO hangers).							
Minimum support width for face mount hangers with 10d and 16d nails is 1¾" and 2" respectively.							
16d nails = 0.162" dia. X 3½" long. 10d nails = 0.148" dia. X 3" long. 10d X 1½" nails = 0.148" dia. X 1½" long.							
Source: Boise Cascade AllJoist® Specifier Guide. October 16, 2009.							

Selected I-joist Hanger Models: Boise AllJoist® I-Joist Series				
Variable Slope Seat Connectors: Simpson Strong-Tie (SST)				
Joist Series	Joist Depth	Seat Model #	Nailing	
			Header	Joist
AJS 140 AJS 20	9½"	VPA3	10d	10d X 1½"
	11⅞"		10d	10d X 1½"
	14"		10d	10d X 1½"
	16"		10d	10d X 1½"
AJS 25	9½"	VPA4	10d	10d X 1½"
	11⅞"		10d	10d X 1½"
	14"		10d	10d X 1½"
	16"		10d	10d X 1½"

Selected I-joist Hanger Models: Boise AllJoist® I-Joist Series				
Face Mount Skewed 45° Joist Hanger: Simpson Strong-Tie (SST)				
Joist Series	Joist Depth	Model #	Nailing	
			Header	Joist
AJS 140 AJS 20	9½"	SUR/L2.56/9	16d	10d X 1½"
	11⅞"	SUR/L2.56/11	16d	10d X 1½"
	14"	SUR/L2.56/14	16d	10d X 1½"
	16"	***SUR/L2.56/14***	16d	10d X 1½"
AJS 25	9½"	***SUR/L410***	16d	16d
	11⅞"	***SUR/L410***	16d	16d
	14"	***SUR/L414***	16d	16d
	16"	***SUR/L414***	16d	16d

Selected I-joist Hanger Models: Boise AllJoist® I-Joist Series				
Variable Slope and Skew Joist Hanger: Simpson Strong-Tie (SST)				
Joist Series	Joist Depth	Face Mount Model Only	Nailing	
			Header	Joist
AJS 140 AJS 20	9½"	***LSSUH310***	10d	10d X 1½"
	11⅞"		10d	10d X 1½"
	14"		10d	10d X 1½"
	16"	N/A	10d	10d X 1½"
AJS 25	9½"	***LSSU410***	10d	10d X 1½"
	11⅞"		10d	10d X 1½"
	14"		10d	10d X 1½"
	16"	N/A	10d	10d X 1½"

Bold Italic Hangers Need Web Stiffeners
Use sloped seat connectors and beveled web stiffeners when joist slope exceeds ¼" per foot.
Leave 1/16" clearance (1/8" maximum) between the end of supported joist and head of the hanger.
Support material must be Boise structural composite lumber, Douglas fir, or Southern pine species.
Minimum support width for single-and double-joist top mount hangers is 3" (1½" for THO hangers).
Minimum support width for face mount hangers with 10d and 16d nails is 1¾" and 2" respectively.
16d nails = 0.162" dia. X 3½" long. 10d nails = 0.148" dia. X 3" long. 10d X 1½" nails = 0.148" dia. X 1½" long.
Source: Boise Cascade AllJoist® Specifier Guide. October 16, 2009.

Selected I-joist Hanger Models: Boise AllJoist® I-Joist Series				
Variable Slope Seat Connectors: United Steel Products				
Joist Series	Joist Depth	Seat Model #	Nailing	
			Header	Joist
AJS 140 AJS 20	9½"	TMP25	10d	10d X 1½"
	11⅞"		10d	10d X 1½"
	14"		10d	10d X 1½"
	16"		10d	10d X 1½"
AJS 25	9½"	TMP4	10d	10d X 1½"
	11⅞"		10d	10d X 1½"
	14"		10d	10d X 1½"
	16"		10d	10d X 1½"

Selected I-joist Hanger Models: Boise AllJoist® I-Joist Series				
Face Mount Skewed 45° Joist Hanger: United Steel Products (USP)				
Joist Series	Joist Depth	Model #	Nailing	
			Header	Joist
AJS 140 AJS 20	9½"	***SKH2520L/R***	10d	10d X 1½"
	11⅞"	***SKH2520L/R***	10d	10d X 1½"
	14"	***SKH2524L/R***	10d	10d X 1½"
	16"	***SKH2524L/R***	10d	10d X 1½"
AJS 25	9½"	SKH410L/R	10d	10d X 1½"
	11⅞"	***SKH410L/R***	10d	10d X 1½"
	14"	***SKH414L/R***	10d	10d X 1½"
	16"	***SKH414L/R***	10d	10d X 1½"

Selected I-joist Hanger Models: Boise AllJoist® I-Joist Series				
Variable Slope and Skew Joist Hanger: United Steel Products (USP)				
Joist Series	Joist Depth	Face Mount Model Only	Nailing	
			Header	Joist
AJS 140 AJS 20	9½"	***LSSH25***	10d	10d X 1½"
	11⅞"		10d	10d X 1½"
	14"		10d	10d X 1½"
	16"	***LSSH35***	10d	10d X 1½"
AJS 25	9½"	***LSSH35***	10d	10d X 1½"
	11⅞"		10d	10d X 1½"
	14"		10d	10d X 1½"
	16"		10d	10d X 1½"

Bold Italic Hangers Need Web Stiffeners
Use sloped seat connectors and beveled web stiffeners when joist slope exceeds ¼" per foot.
Leave 1/16" clearance (1/8" maximum) between the end of supported joist and head of the hanger.
Support material must be Boise structural composite lumber, Douglas fir, or Southern pine species.
Minimum support width for single-and double-joist top mount hangers is 3" (1½" for THO hangers).
Minimum support width for face mount hangers with 10d and 16d nails is 1¾" and 2" respectively.
16d nails = 0.162" dia. X 3½" long. 10d nails = 0.148" dia. X 3" long. 10d X 1½" nails = 0.148" dia. X 1½" long.
Source: Boise Cascade AllJoist® Specifier Guide. October 16, 2009.

Boise Rimboard Nailing Requirements						
Closest Allowable Nail Spacing - Narrow Face (in.)						
Product	**8d Box**	**8d Common**	**10d & 12d Box**	**16d Box**	**10d, 12d Common & 16d Sinker**	**16d Common**
1" BC Rim Board™	3	3	N/A	N/A	N/A	N/A
1 1/16" Versa-Rim	3	4	4	4	6	6
1" or 1⅛" BC Rim Board™ OSB	3	3	See APA EWS #W345J for information*.			
1 5/16" Versa-Lam® 1.4 1800	3	3	3	3	4	6
1¾" Versa-Lam® 2.0 3100	2	3	3	3	4	6
Source: Boise AllJoist®Specifier Guide United States. October 16, 2009. ASG 10/16/2009.						
Nailing patterns for subflooring-to-rimboard per subfloor manufacturers (usually 6" o. c.).						
Note: All BC rim boards come in depths of 9½", 11⅞", 14", and 16".						
8d box nails = 0.120 X 2½". 8d common nails = 0.134 X 2½".						
10d box nails = 0.120 X 3". 10d common nails = 0.148" X 3".						
12d box nails = 0.128" X 3¼" . 12d common nails = 0.148 X 3¼".						
16d box nails = 0.134" X 3½". 16d common nails = 0.165" X 3½". 16d sinker = 0.148" X 3¼".						
*As of 2-19-2011, EWS #W345J is not available on the APA website. Document W345k is available.						

Horizontal I-Joist Roof Spans				AJS 20 Series. Source: All Joist Specifier Guide 10/2009.					
Total deflection = L/180; Live load deflection = L/240		PSF		9½" AJS 20: Roof Slopes			11⁷⁄₈" AJS 20: Roof Slopes		
		Live Load	Dead Load	4:12 or less	4:12 to 8:12	8:12 to 12:12	4:12 or less	4:12 to 8:12	8:12 to 12:12
12" o.c.	Non-Snow 125%	20	10	27'-4"	25'-9"	23'-11"	32'-7"	30'-9"	28'-7"
		20	15	25'-10"	24'-3"	22'-5"	30'-11"	29'-0"	26'-9"
		20	20	24'-8"	23'-1"	21'-3"	29'-6"	27'-7"	25'-4"
	Snow 115%	25	10	25'-11"	24'-6"	22'-10"	31'-0"	29'-3"	27'-3"
		25	15	24'-9"	23'-3"	21'-6'	29'-7"	27'-10"	25'-9"
16" o.c.	Non-Snow 125%	20	10	24'-9"	23'-4"	21'-8"	29'-7"	27'-11"	25'-11"
		20	15	22'-4"	20'-11"	19'-3"	26'-8"	25'-0"	23'-0"
		20	20	22'-4"	20'-11"	19'-3'	26'-8"	25'-0"	23'-0"
	Snow 115%	25	10	23'-6"	22'-2"	20'-8"	28'-1"	26'-6"	24'-8"
		25	15	22'-5"	21'-1"	19'-6"	26'-9"	25'-2"	23'-4"
19.2" o.c.	Non-Snow 125%	20	10	23'-3"	21'-11"	20'-4"	27'-9"	26'-2"	24'-4"
		20	15	22'-0"	20'-8"	19'-1"	26'-4"	24'-8"	22'-10"
		20	20	21'-0"	19'-8"	18'-1"	25'-1"	23'-6"	21'-7"
	Snow 115%	25	10	22'-1"	20'-10"	19'-5"	26'-4"	24'-11"	23'-3"
		25	15	21'-0"	19'-10"	18'-4"	24'-8"	23'-8"	21'-11"
24" o.c.	Non-Snow 125%	20	10	21'-6"	20'-4"	18'-10"	25'-9"	24'-3"	22'-6"
		20	15	20'-4"	19'-1"	17'-8"	24'-4"	22'-10"	21'-1"
		20	20	19'-5"	18'-2"	16'-9"	22'-11"	21'-9"	20'-0"
	Snow 115%	25	10	20'-5"	19'-4"	18'-0"	23'-7"	23'-1"	21'-6"
		25	15	19'-4"	18'-4"	17'-0"	22'-0"	21'-5"	20'-4"
Values assume most restrictive of simple or multiple spans, min bearing, no web stiffeners.									

Horizontal I-Joist Roof Spans				Boise AllJoist® I-Joist AJS 20 Series					
Total deflection = L/180; Live load deflection = L/240		PSF		14" AJS 20: Roof Slopes			16" AJS 20: Roof Slopes		
		Live Load	Dead Load	4:12 or less	4:12 to 8:12	8:12 to 12:12	4:12 or less	4:12 to 8:12	8:12 to 12:12
12" o.c.	Non-Snow 125%	20	10	37'-1"	25'-0"	32'-6"	41'-2"	38'-10"	36'-0"
		20	15	35'-2"	33'-0"	30'-5"	39'-0"	36'-7"	33'-9"
		20	20	33'-6"	31'-5"	28'-10"	37'-2"	34'-10"	32'-0"
	Snow 115%	25	10	35'-3"	33'-4"	31'-0"	39'-1"	36'-11"	34'-4"
		25	15	33'-7"	331'-8"	29'-4"	36'-11"	35'-1"	32'-6"
16" o.c.	Non-Snow 125%	20	10	33'-8"	31'-9"	29'-5"	37'-4"	35'-2"	32'-8"
		20	15	31'-10"	29'-11"	27'-7"	35'-4"	33'-2"	30'-7"
		20	20	30'-5"	28'-5"	26'-2"	33'-3"	31'-7"	29'-0"
	Snow 115%	25	10	31'-10"	30'-2"	28'-1"	34'-3"	33'-6"	31'-2"
		25	15	29'-8"	28'-8"	26'-7"	32'-0"	31'-1"	29'-5'
19.2" o.c.	Non-Snow 125%	20	10	31'-7"	29'-10"	27'-8"	35'-1"	33'-1"	30'-8"
		20	15	29'-11"	28'-1"	25'-11"	32'-6"	31'-2"	28'-9"
		20	20	28'-1"	26'-9"	24'-7"	30'-4"	29'-3"	27'-3"
	Snow 115%	25	10	29'-0"	28'-4"	26'-5"	31'-3"	30'-7"	29'-3"
		25	15	27'-1"	26'-4"	24'-11"	29'-2"	28'-5"	27'-5"
24" o.c.	Non-Snow 125%	20	10	29'-2"	27'-7"	25'-8"	31'-5"	30'-8"	28'-5"
		20	15	26'-11"	26'-0"	24'-0"	29'-0"	28'-2"	26'-8"
		20	20	25'-2"	24'-3"	22'-9"	27'-1"	26'-2"	24'-11"
	Snow 115%	25	10	25'-11"	25'-5"	24'-6"	27'-11"	27'-4"	26'-7"
		25	15	24'-2"	23'-6"	22'-8"	26'-1"	25'-4"	24'-3"
Values assume most restrictive of simple or multiple spans, min bearing, no web stiffeners.									
Source: Boise AllJoist® Specifier Guide United States. October 16, 2009. ASG 10/16/2009.									

Horizontal I-Joist Roof Spans				Boise AllJoist® I-Joist AJS 140 Series					
Total deflection = L/180; Live load deflection = L/240		PSF		9½" AJS 140: Roof Slopes			11⁷⁄₈" AJS 140: Roof Slopes		
		Live Load	Dead Load	4:12 or less	4:12 to 8:12	8:12 to 12:12	4:12 or less	4:12 to 8:12	8:12 to 12:12
12" o.c.	Non-Snow 125%	20	10	25'-4"	23'-9"	22'-0"	30'-1"	28'-5"	26'-4"
		20	15	23'-10"	22'-5"	20'-8"	28'-6"	26'-9"	23'-5"
		20	20	22'-9"	21'-4"	19'-7"	27'-3"	25'-6"	23'-5"
	Snow 115%	25	10	23'-11"	22'-7"	21'-0"	28'-5"	27'-0"	25'-2"
		25	15	22'-10"	21'-6"	19'-10"	26'-6"	25'-8"	23'-9"
16" o.c.	Non-Snow 125%	20	10	22'-10"	21'-6"	20'-0"	27'-4"	25'-9"	23'-11"
		20	15	21'-7"	20'-3"	18'-9"	25'-6"	24'-3"	22'-5"
		20	20	20'-7"	19'-3"	17'-9"	23'-10"	23'-0"	21'-3"
	Snow 115%	25	10	21'-7"	20'-6"	19'-1"	24'-7"	24'-1"	22'-10"
		25	15	20'-1"	19'-5"	18'-0"	22'-11"	22'-4"	21'-6"
19.2" o.c.	Non-Snow 125%	20	10	21'-5"	20'-3"	18'-9"	25'-3"	24'-2"	22'-5"
		20	15	20'-3"	19'-1"	17'-7"	23'-3"	22'-7"	21'-1"
		20	20	19'-1"	18'-1"	16'-8"	21'-9"	21'-0"	19'-11"
	Snow 115%	25	10	19'-8"	19'-3"	17'-11"	22'-5"	21'-11"	21'-4"
		25	15	18'-4"	17'-10"	16'-11"	20'-11"	20'-4"	19'-7"
24" o.c.	Non-Snow 125%	20	10	19'-9"	18'-9"	17'-5"	22'-6"	22'-0"	20'-10"
		20	15	18'-3"	17'-8"	16'-3"	20'-10"	20'-2"	19'-4"
		20	20	17'-0"	16'-5"	15'-5"	19'-5"	18'-9"	17'-10"
	Snow 115%	25	10	17'-7"	17'-2"	16'-7"	20'-0"	19'-7"	19'-1"
		25	15	16'-4"	15'-11"	15'-4"	18'-8"	18'-2"	17'-6"
Values assume most restrictive of simple or multiple spans, min bearing, no web stiffeners.									
Source: Boise AllJoist® Specifier Guide United States. October 16, 2009. ASG 10/16/2009.									

Boise AllJoist®I-Joists Reinforced Load Bearing Cantilever Tables											
Joist Depth (in.)	Joist Series	Roof Truss Span (ft)	Roof Total Load (PSF)								
			35			45			55		
			Joist Spacing (in.)								
			16	19.2	24	16	19.2	24	16	19.2	24
9½"	AJS® 140	24	0	0	1	0	0	X	0	X	X
		26	0	0	1	0	1	X	1	X	X
		28	0	0	X	0	X	X	1	X	X
		30	0	0	X	0	X	X	X	X	X
		32	0	0	X	1	X	X	X	X	X
		34	0	1	X	1	X	X	X	X	X
		36	0	1	X	1	X	X	X	X	X
		38	0	X	X	X	X	X	X	X	X
		40	0	X	X	X	X	X	X	X	X
	AJS® 20	24	0	0	1	0	0	2	0	2	X
		26	0	0	1	0	1	X	1	2	X
		28	0	0	1	0	1	X	1	2	X
		30	0	0	2	0	2	X	1	X	X
		32	0	0	2	1	2	X	2	X	X
		34	0	0	2	1	2	X	2	X	X
		36	0	1	X	1	X	X	2	X	X
		38	0	1	X	1	X	X	X	X	X
		40	0	2	X	2	X	X	X	X	X
11⁷⁄₈"	AJS® 140	24	0	0	0	0	0	0	0	0	X
		26	0	0	0	0	0	1	0	0	X
		28	0	0	0	0	0	1	0	1	X
		30	0	0	0	0	0	X	0	1	X
		32	0	0	0	0	0	X	0	1	X
		34	0	0	1	0	0	X	0	X	X
		36	0	0	1	0	1	X	1	X	X
		38	0	0	1	0	1	X	1	X	X
		40	0	0	X	0	1	X	1	X	X
	AJS® 20	24	0	0	0	0	0	WS	0	0	1
		26	0	0	0	0	0	1	0	0	2
		28	0	0	0	0	0	1	0	1	X
		30	0	0	0	0	0	1	0	1	X
		32	0	0	0	0	0	2	0	1	X
		34	0	0	1	0	0	X	0	1	X
		36	0	0	1	0	1	X	1	2	X
		38	0	0	1	0	1	X	1	2	X
		40	0	0	X	0	1	X	1	X	X

Source: Boise AllJoist® Specifier Guide United States. October 16, 2009. ASG 10/16/2009.

Key to Cantilever Tables		Cut 48" long reinforcers to match depth.
0	No reinforcement required.	Use $^{23}/_{32}$" APA rated sheathing, Exp.1.
WS	Web stiffeners needed at supports.	Use 48/24 span rating panels.
1	Web stiffeners plus one reinforcer.	Face grain installed horizontally.
2	Web stiffeners plus two reinforcers.	Fasten reinforcer to flanges w/ 8d nails, 6" o.c.
X	Use deeper joists or closer spacing.	when reinfircing both sides, stagger nails.
Source: Boise AllJoist® Specifier Guide United States. October 16, 2009. ASG 10/16/2009.		

Joist Depth (in.)	Roof Truss Span (ft)	Boise AllJoist® I-Joists. Brick Cantilevers. Roof Live Load in pounds per square foot								
		20			30			40		
		Joist spacing on center (o.c.)								
		12"	16"	19.2"	12"	16"	19.2"	12"	16"	19.2"
9½"	24	0	0	0	0	0	1	0	1	1
	26	0	0	0	0	0	1	0	1	1
	28	0	0	0	0	0	1	0	1	1
	30	0	0	0	0	0	1	0	1	1
	32	0	0	1	0	1	1	0	1	2
	34	0	0	X	0	X	X	0	1	X
	36	0	X	X	0	X	X	1	X	X
11⁷⁄₈"	24	0	0	0	0	0	0	0	0	0
	26	0	0	0	0	0	0	0	0	0
	28	0	0	0	0	0	0	0	0	1
	30	0	0	0	0	0	0	0	0	1
	32	0	0	0	0	0	0	0	0	1
	34	0	0	0	0	1	1	0	1	1
	36	0	0	0	0	1	1	0	1	1
14"	24	0	0	0	0	0	0	0	0	0
	26	0	0	0	0	0	0	0	0	0
	28	0	0	0	0	0	0	0	0	0
	30	0	0	0	0	0	0	0	0	0
	32	0	0	0	0	0	0	0	0	0
	34	0	0	0	0	0	0	0	0	1
	36	0	0	0	0	0	0	0	0	1

Table assumes 40 PSF live load & 15 PSF dead load on floors, 80 PLF wall load, and a 15 PSF dead load on the roof.

Key to Table	
0	No reinforcement required.
WS	Web stiffeners needed at supports.
1	Web stiffeners plus one reinforcer.
2	Web stiffeners plus two reinforcers.
X	Use deeper joists or closer spacing and recheck.

Source: Boise AllJoist®Specifier Guide United States. October 16, 2009. ASG 10/16/2009.

Boise AllJoist® Floor Span Tables					
Live Load deflection limited to L/360 (Not recommended) 40PSF live load and 10PSF dead load					
Joist Depth	**AllJoist Series**	**12" o.c.**	**16" o.c.**	**19.2" o.c.**	**24" o.c.**
9½"	**140**	19'-7"	17'-0"	18'-2"	16'-4"
	20	21'-1"	19'-3"	18'-2"	16'-4"
11⁷⁄₈"	**140**	22'-5"	19'-4"	17'-8"	15'-9"
	20	25'-1"	22'-10"	20'-10"	18'-7"
14"	**20**	28'-5"	25'-1"	22'-10"	19'-1"
16"	**20**	31'-2"	27'-0"	24'-1"	19'-3"
Boise AllJoist® Floor Span Tables					
Live Load deflection limited to L/480 40PSF live load and 10PSF dead load					
Joist Depth	**AllJoist Series**	**12" o.c.**	**16" o.c.**	**19.2" o.c.**	**24" o.c.**
9½"	**140**	17'-9"	16'-3"	15'-4"	13'-10"
	20	19'-0'	17'-5"	16'-5"	15'-3"
11⁷⁄₈"	**140**	21'-2"	19'-4"	17'-8"	15'-9"
	20	22'-8"	20'-8"	19'-6"	18'-2"
14"	**20**	25'-8"	23'-6"	22'-2"	19'-1"
16"	**20**	28'-6"	26'-0"	24'-1"	19'-3"
Source: Boise AllJoist Specifier Guide United States. October 16, 2009. ASG 10/16/2009.					

Joist Depth (in.)	Roof Truss Span (ft)	AllJoist® I-Joists. Reinforcement Requirements. Roof Live Load in pounds per square foot								
		20			30			40		
		Joist spacing on center (o.c.)								
		12"	16"	19.2"	12"	16"	19.2"	12"	16"	19.2"
9½"	24	0	0	0	0	0	1	0	1	1
	26	0	0	0	0	0	1	0	1	1
	28	0	0	0	0	0	1	0	1	1
	30	0	0	0	0	0	1	0	1	1
	32	0	0	1	0	1	1	0	1	2
	34	0	0	X	0	X	X	0	1	X
	36	0	X	X	0	X	X	1	X	X
11⅞"	24	0	0	0	0	0	0	0	0	0
	26	0	0	0	0	0	0	0	0	0
	28	0	0	0	0	0	0	0	0	1
	30	0	0	0	0	0	0	0	0	1
	32	0	0	0	0	0	0	0	0	1
	34	0	0	0	0	1	1	0	1	1
	36	0	0	0	0	1	1	0	1	1
14"	24	0	0	0	0	0	0	0	0	0
	26	0	0	0	0	0	0	0	0	0
	28	0	0	0	0	0	0	0	0	0
	30	0	0	0	0	0	0	0	0	0
	32	0	0	0	0	0	0	0	0	0
	34	0	0	0	0	0	0	0	0	1
	36	0	0	0	0	0	0	0	0	1

Table assumes 40 PSF live load & 15 PSF dead load on floors, 80 PLF wall load, and a 15 PSF dead load on the roof.

Key to Table	
0	No reinforcement required.
WS	Web stiffeners needed at supports.
1	Web stiffeners plus one reinforcer.
2	Web stiffeners plus two reinforcers.
X	Use deeper joists or closer spacing and recheck.

Source: Boise AllJoist®Specifier Guide United States. October 16, 2009. ASG 10/16/2009.

Boise Versa-Lam® LVL Headers and Beams

Minimum clearance between holes:
2 X the diameter of the largest hole.

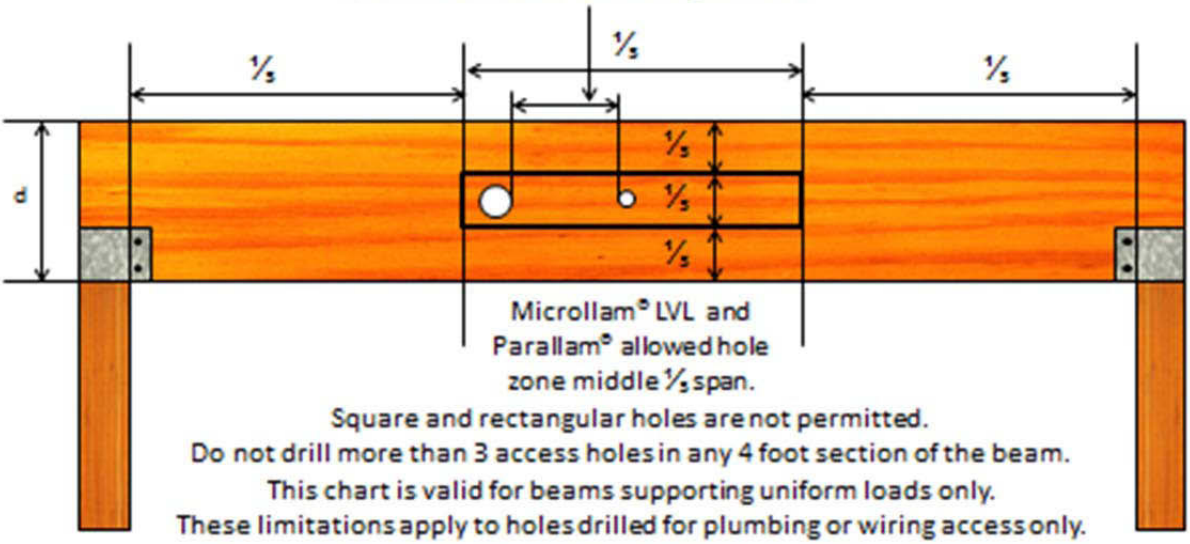

Square and rectangular holes are not permitted.
Do not drill more than 3 access holes in any 4 foot section of the beam.
This chart is valid for beams supporting uniform loads only.
These limitations apply to holes drilled for plumbing or wiring access only.

Boise Versa-Lam® Beams and Headers	
LVL Beam Depth	Max. Hole Diameter
5½"	¾"
7¼"	1"
≥ 9¼"	2"

Source: Boise AllJoist® Specifier Guide. October 16, 2009. ASG 10/16/2009.

Boise Versa-Lam® LVL Multiple Member Connections		
Top-Loaded Applications		
Plies	**Depth**	**Nailing**
(2) 1¾" Plies	Depths 11⅞" & less	2 rows 16d box/sinker nails @ 12" o. c.
	Depths 14' - 18"	3 rows 16d box/sinker nails @ 12" o. c.
	Depth = 24"	4 rows 16d box/sinker nails @ 12" o. c.
(3) 1¾" Plies	Depths 11⅞" & less	2 rows 16d box/sinker nails @ 12" o. c.
	Depths 14' - 18"	3 rows 16d box/sinker nails @ 12" o. c.
	Depth = 24"	4 rows 16d box/sinker nails @ 12" o. c.
(4) 1¾" Plies	Depths 18" & less	2 rows ½" bolts @ 24" o. c., staggered
	Depth = 24"	3 rows ½" bolts @ 24" o. c., staggered every 8"
(2) 3½" Plies	Depths 18" & less	2 rows ½" bolts @ 24" o. c., staggered
	Depth = 24"	3 rows ½" bolts @ 24" o. c., staggered every 8"
Source: Boise AllJoist® Specifier Guide US Version. October 16, 2009. ASG 10/16/2009.		
16d box nails = 0.135" X 3½". 16d sinker nails = 0.135" X 3¼".		
Beams wider than 7" must be designed by the engineer of record.		
FastenMaster TrussLok, Simpson Strong-Tie SDS, and USP WS screws may also be used.		

Boise Versa-Lam® LVL Beams and Headers					
Simpson Strong-Tie® Connectors: Face Mount Hangers					
Supported Member Width	**Supported Member Depth**	**Hanger**	**Hanger Depth**	**Fastener Schedule**	
				Header	**Joist**
1¾"	**7¼"**	HU7	2½"	16d	10d X 1½"
	9¼"	HU7	2½"	16d	10d X 1½"
		HUS1.81/10	3"	16d	16d
	9½"	HU9	2½"	16d	10d X 1½"
		HUS1.81/10	3"	16d	16d
	11¼"	HU11	2½"	16d	10d X 1½"
		HUS1.81/10	3"	16d	16d
	11⁷⁄₈"	HU11	2½"	16d	10d X 1½"
		HUS1.81/10	3"	16d	16d
	14"	HU14	2½"	16d	10d X 1½"
		HUS1.81/10	3"	16d	16d
3½": Two plies of 1¾" LVL Or One ply of 3½" LVL	**7¼"**	HHUS48	3"	16d	16d
	9¼"	HHUS410	3"	16d	16d
		HGUS410	4"	16d	16d
	9½"	HHUS410	3"	16d	16d
		HGUS410	4"	16d	16d
	11¼"	HHUS410	3"	16d	16d
		HGUS412	4"	16d	16d
	11⁷⁄₈"	HHUS410	3"	16d	16d
		HGUS412	4"	16d	16d
	14"	HHUS410	3"	16d	16d
		HGUS414	4"	16d	16d
	16"	HHUS410	3"	16d	16d
		HGUS414	4"	16d	16d
	18"	HHUS410	3"	16d	16d
		HGUS414	4"	16d	16d
Source: Simpson Strong-Tie Connector Selection Guide. CSG-BC09 5/09, exp. 12/11.					
16d nails = 0.162" dia. X 3½" long. 10d nails = 0.148" dia. X 3" long. 10d X 1½" nails = 0.148" dia. X 1½" long.					

Boise Versa-Lam® LVL Beams and Headers					
Simpson Strong-Tie® Connectors: Face Mount Hangers					
Supported Member Width	**Supported Member Depth**	**Hanger**	**Hanger Depth**	**Fastener Schedule**	
				Header	**Joist**
5¼": Three plies of 1¾" LVL Or One ply of 5¼" LVL	**7¼"**	HU68	2½"	16d	16d
	9¼"	HHUS5.50/10	3"	16d	16d
		HGUS5.50/10	4"	16d	16d
	9½"	HHUS5.50/10	3"	16d	16d
		HGUS5.50/10	4"	16d	16d
	11¼"	HHUS5.50/10	3"	16d	16d
		HGUS5.50/12	4"	16d	16d
	11⁷⁄₈"	HHUS5.50/10	3"	16d	16d
		HGUS5.50/12	4"	16d	16d
	14"	HHUS5.50/10	3"	16d	16d
		HGUS5.50/14	4"	16d	16d
	16"	HGUS5.50/14	4"	16d	16d
		HGU5.50-SDS	5¼"	SDS ¼" X 2½"	SDS ¼" X 2½"
	18"	HGUS5.50/14	4"	16d	16d
		HGU5.50-SDS	5¼"	SDS ¼" X 2½"	SDS ¼" X 2½"
7": Four plies of 1¾" LVL Or One ply of 7" LVL	**7¼"**	N/A	N/A	N/A	N/A
	9¼"	HHUS7.25/10	3⁵⁄₁₆"	16d	16d
		HGUS7.25/10	4"	16d	16d
	9½"	HHUS7.25/10	3⁵⁄₁₆"	16d	16d
		HGUS7.25/10	4"	16d	16d
	11¼"	HHUS7.25/10	3⁵⁄₁₆"	16d	16d
		HGUS7.25/12	4"	16d	16d
	11⁷⁄₈"	HHUS7.25/10	3⁵⁄₁₆"	16d	16d
		HGUS7.25/12	4"	16d	16d
	14"	HGUS7.25/14	4"	16d	16d
		HGU7.25-SDS	5¼"	SDS ¼" X 2½"	SDS ¼" X 2½"
	16"	HGUS7.25/14	4"	16d	16d
		HGU7.25-SDS	5¼"	SDS ¼" X 2½"	SDS ¼" X 2½"
	18"	HGUS7.25/14	4"	16d	16d
		HGU7.25-SDS	5¼"	SDS ¼" X 2½"	SDS ¼" X 2½"
Source: Simpson Strong-Tie Connector Selection Guide. CSG-BC09 5/09, exp. 12/11.					
16d nails = 0.162" dia. X 3½" long. 10d nails = 0.148" dia. X 3" long. 10d X 1½" nails = 0.148" dia. X 1½" long.					

Boise Versa-Lam® LVL Beams and Headers					
Simpson Strong-Tie® Connectors: Top Mount Hangers					
Supported Member Width	**Supported Member Depth**	**Hanger**	**Hanger Depth**	**Fastener Schedule**	
				Header	**Joist**
1¾"	**7¼"**	LBV1.81/7.25	3"	16d	10d X 1½"
	9¼"	LBV1.81/9.25	3"	16d	10d X 1½"
		WPU1.81/9.25	4"	16d	10d X 1½"
	9½"	MIT9.5	2½"	16d	10d X 1½"
		LBV1.81/9.5	3"	16d	10d X 1½"
	11¼"	LBV1.81/11.25	3"	16d	10d X 1½"
		WPU1.81/11.25	4"	16d	10d X 1½"
	11⁷⁄₈"	MIT11.88	2½"	16d	10d X 1½"
		BA1.81/11.88	3"	16d	10d X 1½"
	14"	MIT1.81/14	2½"	16d	10d X 1½"
		LBV1.81/14	3"	16d	10d X 1½"
3½": Two plies of 1¾" LVL Or One ply of 3½" LVL	**7¼"**	WPU3.56/7.25	3"	16d	10d X 1½"
	9¼"	LBV3.56/9.25	2½"	16d	10d X 1½"
		HB3.56/9.25	3½"	16d	16d
	9½"	LBV3.56/9.5	2½"	16d	10d X 1½"
		HB3.56/9.5	3½"	16d	16d
	11¼"	B3.56/11.25	2½"	16d	16d
		HB3.56/11.25	3½"	16d	16d
	11⁷⁄₈"	BA3.56/11.88	3"	16d	10d X 1½"
		HB3.56/11.88	3½"	16d	16d
	14"	BA3.56/14	3"	16d	10d X 1½"
		GLTV3.514	5"	16d	16d
	16"	BA3.56/16	3"	16d	10d X 1½"
		GLTV3.516	5"	16d	16d
	18"	BA3.56/18	3½"	16d	16d
		HGLTV3.518	6"	16d	16d
Source: Simpson Strong-Tie Connector Selection Guide. CSG-BC09 5/09, exp. 12/11.					
16d nails = 0.162" dia. X 3½" long. 10d nails = 0.148" dia. X 3" long. 10d X 1½" nails = 0.148" dia. X 1½" long.					

Boise Versa-Lam® LVL Beams and Headers					
Simpson Strong-Tie® Connectors: Top Mount Hangers					
Supported Member Width	**Supported Member Depth**	**Hanger**	**Hanger Depth**	**Fastener Schedule**	
				Header	**Joist**
5¼": Three plies of 1¾" LVL Or One ply of 5¼" LVL	**7¼"**	WPU5.50/7.25	4"	16d	10d X 1½"
	9¼"	HB5.50/9.25	3½"	16d	16d
		GLTV5.50/9.25	5"	16d	16d
	9½"	HB5.50/9.5	3½"	16d	16d
		GLTV5.59	5"	16d	16d
	11¼"	HB5.50/11.25	3½"	16d	16d
		GLTV5.50/11.25	5"	16d	16d
	11⁷⁄₈"	HB5.50/11.88	3½"	16d	16d
		GLTV5.511	6"	16d	16d
	14"	HB5.50/14	3½"	16d	16d
		EGQ5.50-SDS	6"	SDS ¼" X 3"	SDS ¼" X 3"
	16"	HB5.50/16	3½"	16d	16d
		EGQ5.50-SDS	6"	SDS ¼" X 3"	SDS ¼" X 3"
	18"	HGLTV5.518	6"	16d	16d
		EGQ5.50-SDS	6"	SDS ¼" X 3"	SDS ¼" X 3"
7": Four plies of 1¾" LVL Or One ply of 7" LVL	**7¼"**	N/A	N/A	N/A	N/A
	9¼"	HB7.12/9.25	3½"	16d	16d
		GLTV49.25-2	5"	16d	16d
	9½"	HB7.12/9.5	3½"	16d	16d
		GLTV49.5-2	5"	16d	16d
	11¼"	HB7.12/11.25	3½"	16d	16d
		HGLTV411.25-2	6"	16d	16d
	11⁷⁄₈"	HB7.12/11.88	3½"	16d	16d
		EGQ7.25/SDS	6"	SDS ¼" X 3"	SDS ¼" X 3"
	14"	GLTV414-2	5"	16d	16d
		EGQ7.25/SDS	6"	SDS ¼" X 3"	SDS ¼" X 3"
	16"	HGLTV416-2	6"	16d	16d
		EGQ7.25/SDS	6"	SDS ¼" X 3"	SDS ¼" X 3"
	18"	HGLTV418-2	6"	16d	16d
		EGQ7.25/SDS	6"	SDS ¼" X 3"	SDS ¼" X 3"
Source: Simpson Strong-Tie Connector Selection Guide. CSG-BC09 5/09, exp. 12/11.					
16d nails = 0.162" dia. X 3½" long. 10d nails = 0.148" dia. X 3" long. 10d X 1½" nails = 0.148" dia. X 1½" long.					
HU hangers use both round and triangular holes.					

Appendix H: Georgia Pacific Details

GPI Brick Ledge Cantilever

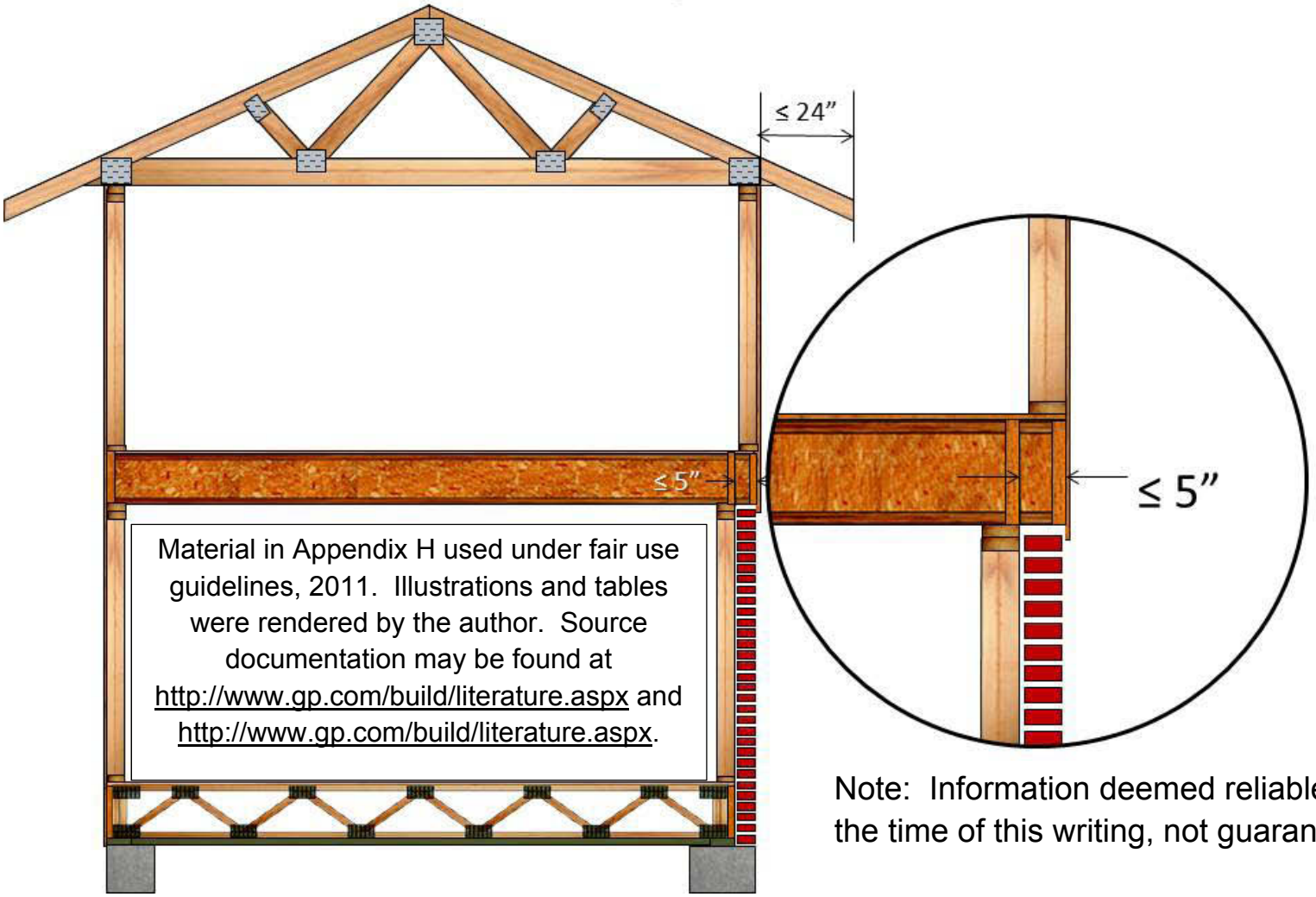

Material in Appendix H used under fair use guidelines, 2011. Illustrations and tables were rendered by the author. Source documentation may be found at http://www.gp.com/build/literature.aspx and http://www.gp.com/build/literature.aspx.

Note: Information deemed reliable as of the time of this writing, not guaranteed.

GPI Bearing Cantilever

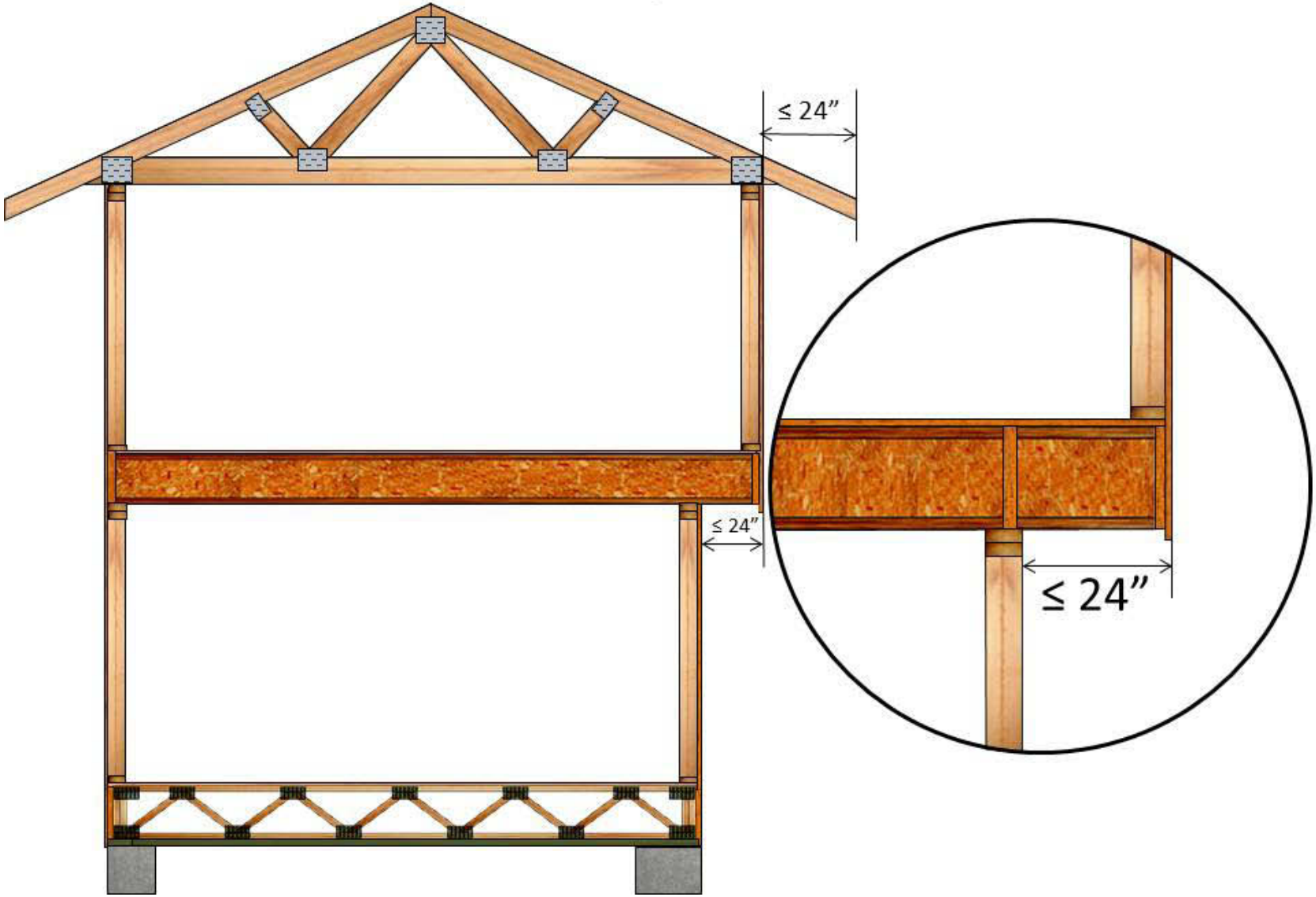

GPI Type 0 No Cantilever Reinforcement

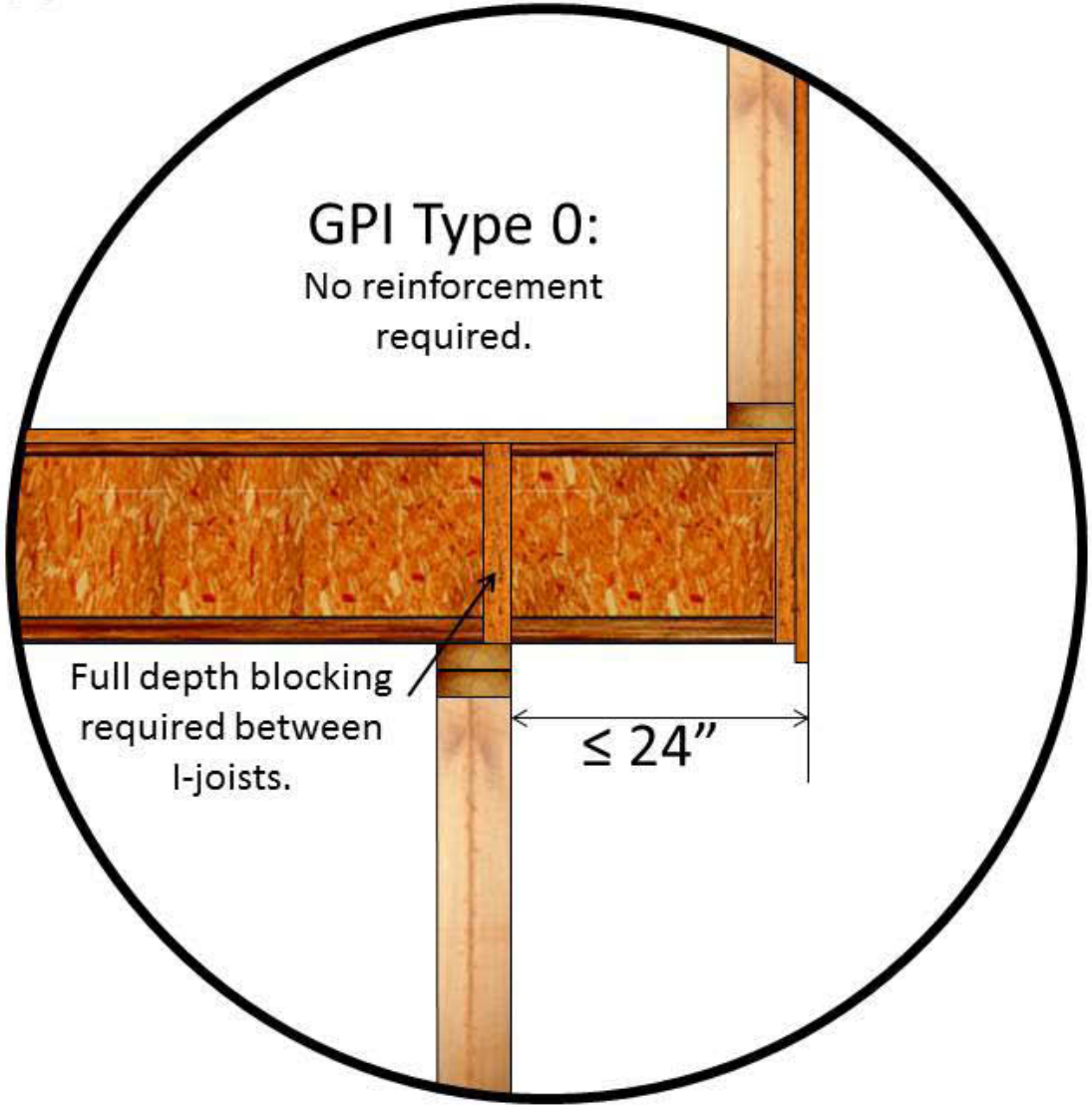

GPI Type 1 Cantilever Reinforcement

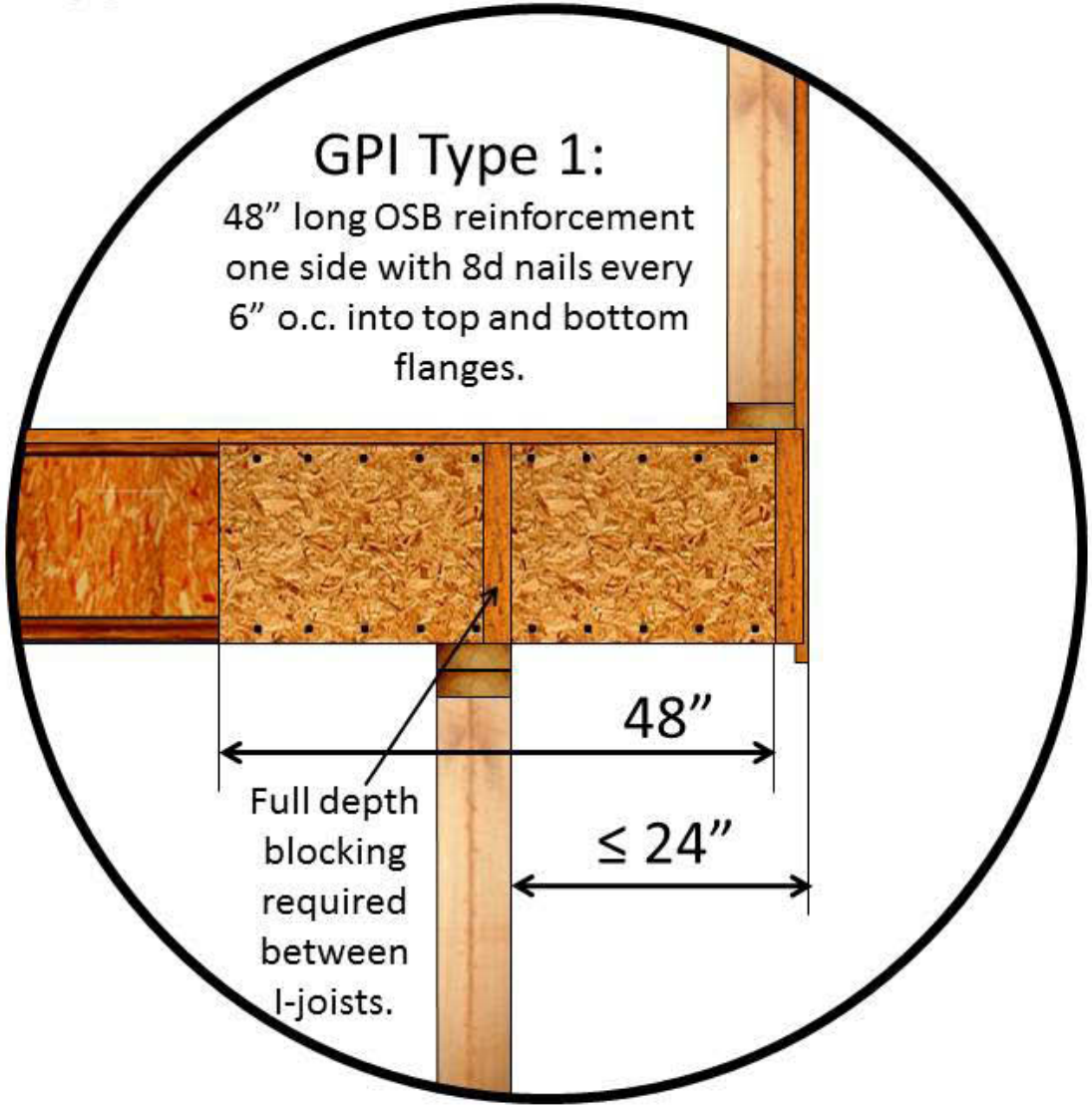

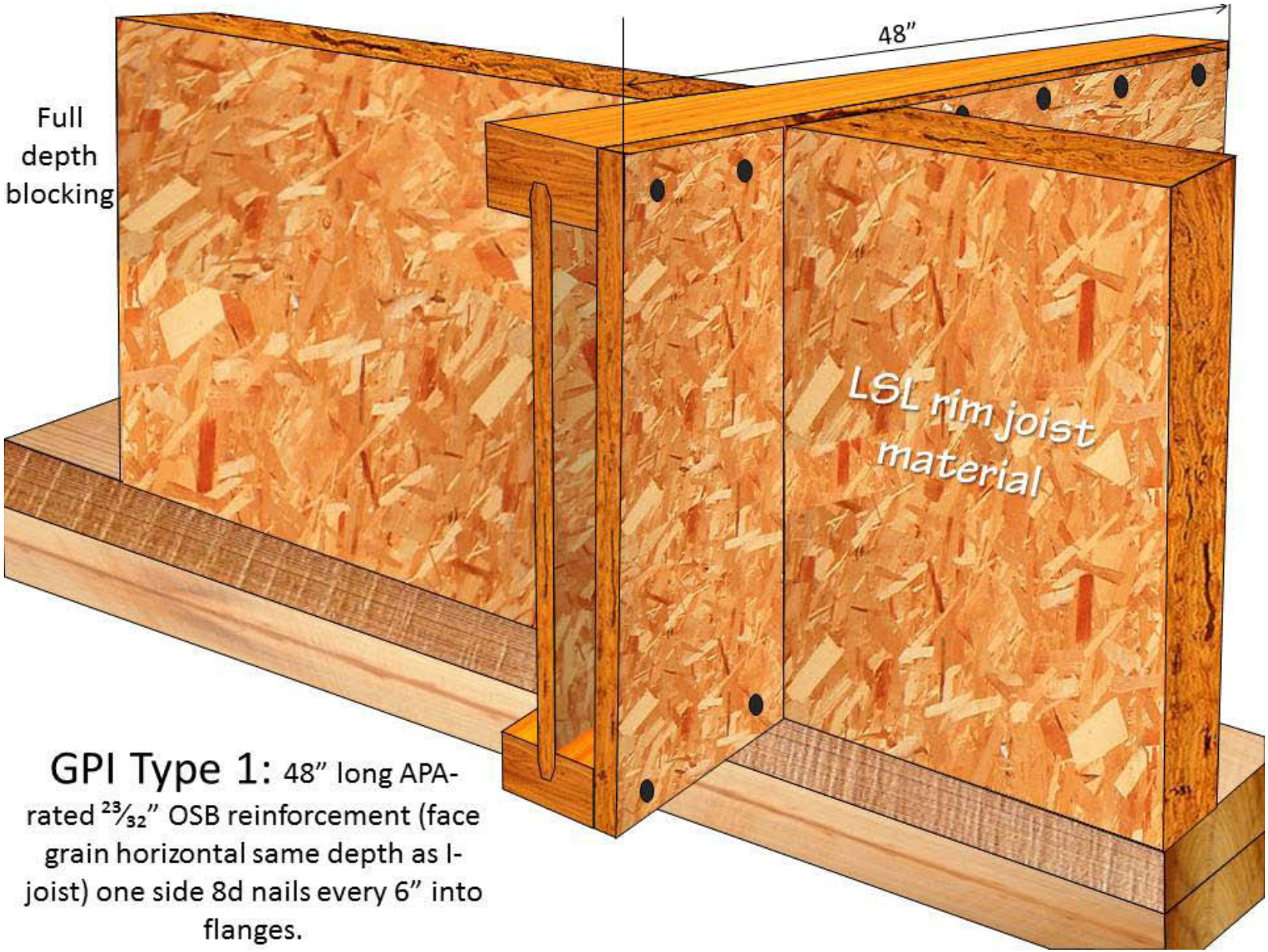

GPI Type 1: 48" long APA-rated 23/32" OSB reinforcement (face grain horizontal same depth as I-joist) one side 8d nails every 6" into flanges.

GPI Type 2(a) Cantilever Reinforcement

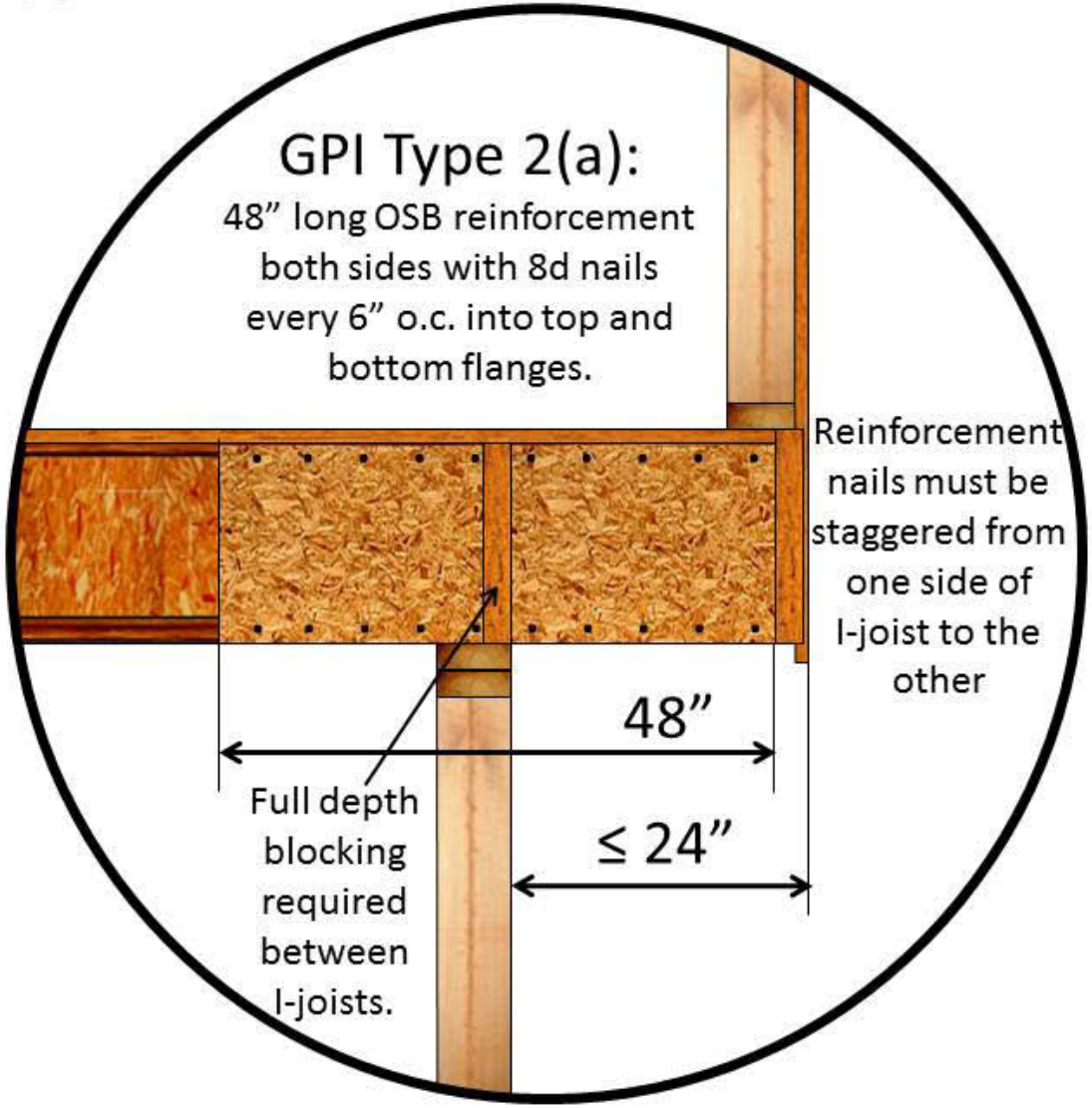

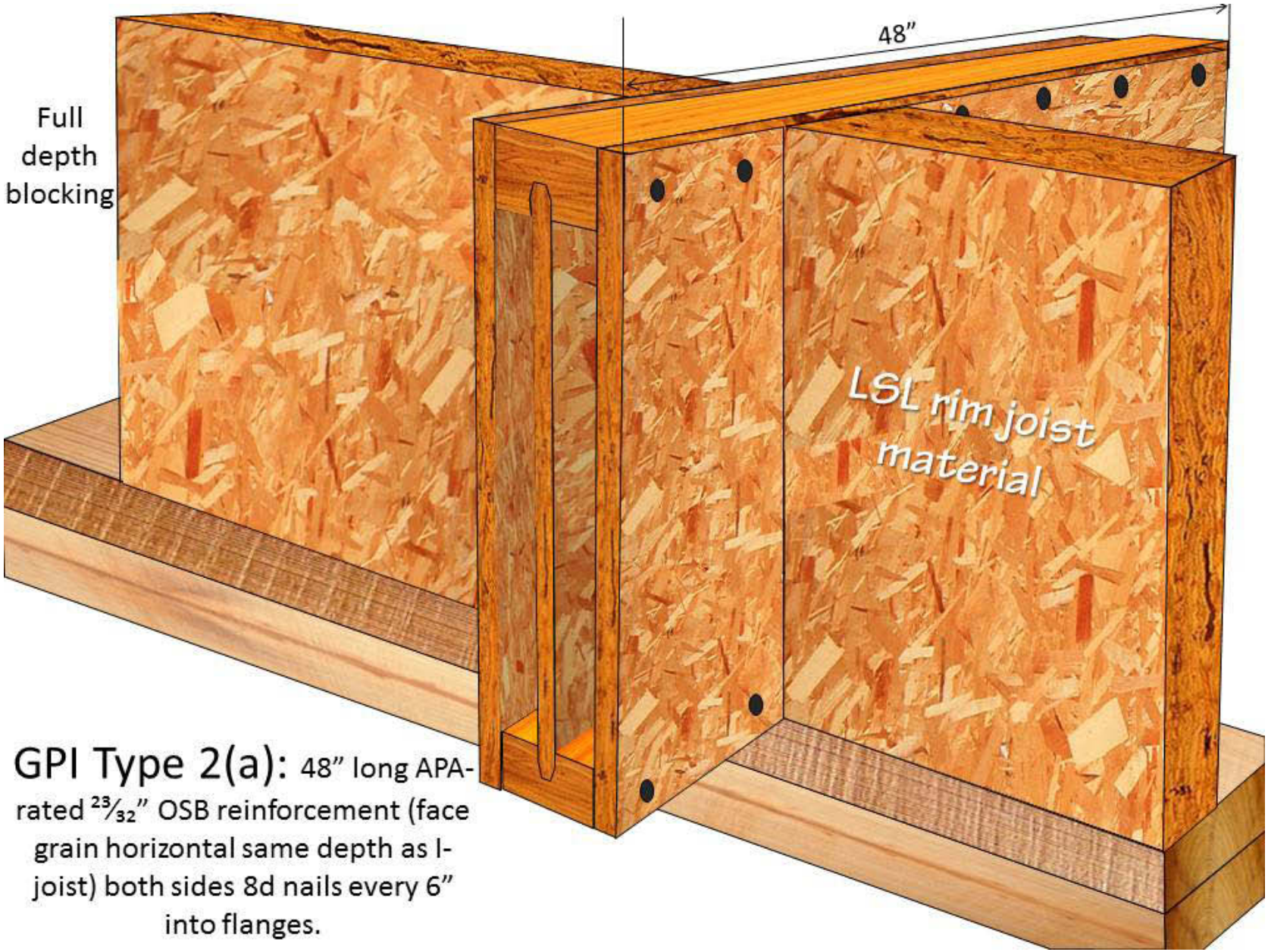

GPI Type 2(a): 48" long APA-rated 23/32" OSB reinforcement (face grain horizontal same depth as I-joist) both sides 8d nails every 6" into flanges.

GPI Type 2(b) Cantilever Reinforcement

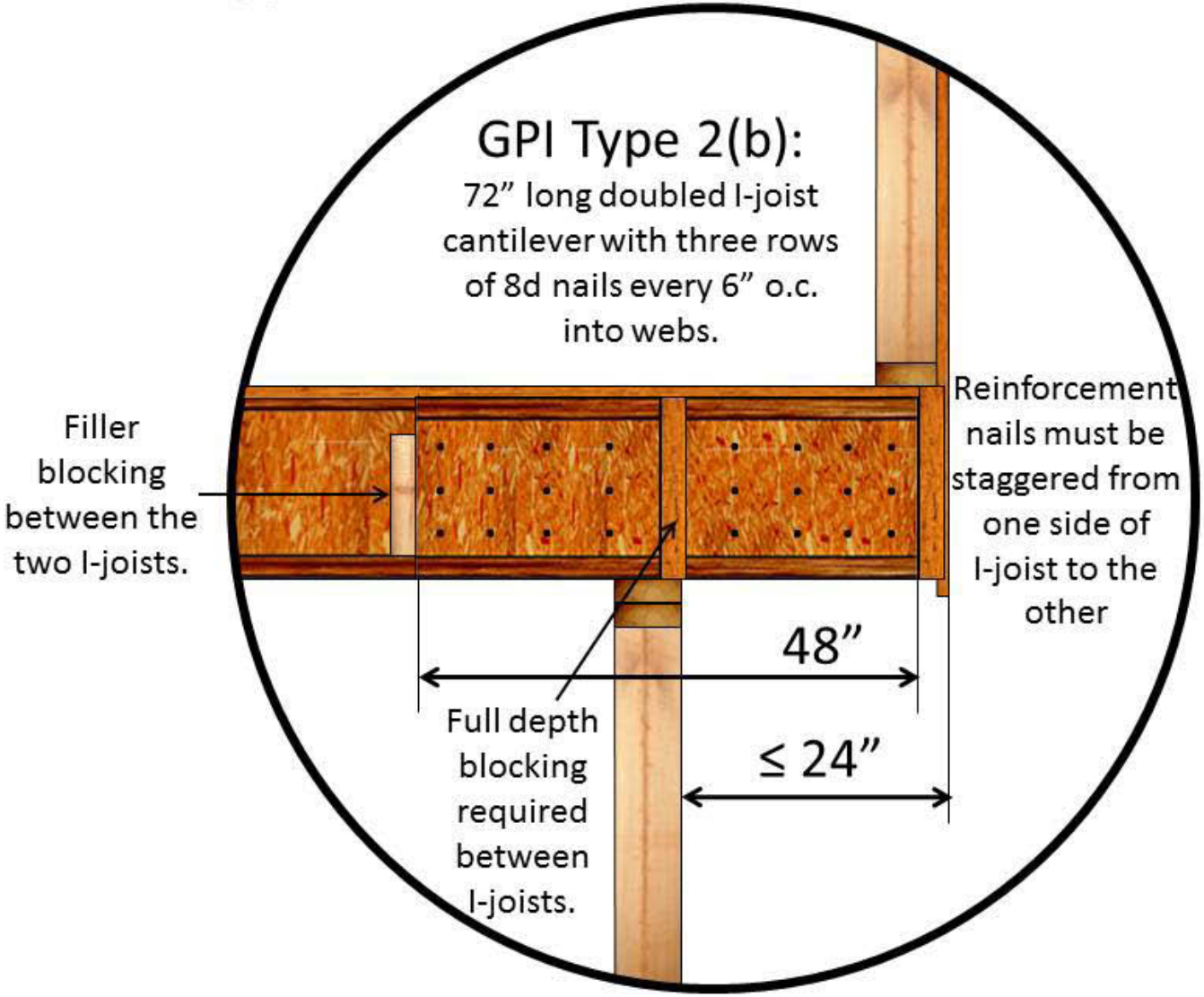

Joist Depth	Roof Truss Span	GPI I-Joists. Maximum Cantilever Lengths of 24": Reinforcement Requirements: Roof Loadings							
		Total Load = 35 PSF. Live Load not to exceed 20 PSF.				Total Load = 45 PSF. Live Load not to exceed 20 PSF.			
		12"	16"	19.2"	24"	12"	16"	19.2"	24"
9½"	26	0	0	C1	C2	0	C1	C2	N/A
	28	0	C1	C1	C2	C1	C1	C2	N/A
	30	0	C1	C1	C2	C1	C2	N/A	N/A
	32	0	C1	C2	N/A	C1	C2	N/A	N/A
	34	0	C1	C2	N/A	C1	C2	N/A	N/A
	36	C1	C1	C2	N/A	C1	N/A	N/A	N/A
11⁷/₈"	26	0	0	0	0	0	0	0	C1
	28	0	0	0	C1	0	0	C1	C1
	30	0	0	0	C1	0	0	C1	C2
	32	0	0	0	C1	0	0	C1	C2
	34	0	0	0	C1	0	C1	C1	C2
	36	0	0	0	C1	0	C1	C1	C2
	38	0	0	C1	C1	0	C1	C2	N/A
14"	26	0	0	0	0	0	0	0	C1
	28	0	0	0	0	0	0	0	C1
	30	0	0	0	C1	0	0	C1	C1
	32	0	0	0	C1	0	0	C1	C1
	34	0	0	0	C1	0	0	C1	C1
	36	0	0	0	C1	0	0	C1	C2
	38	0	0	0	C1	0	C1	C1	C2
	40	0	0	C1	C1	0	C1	C1	C2
16"	26	0	0	0	0	0	0	0	C1
	28	0	0	0	0	0	0	0	C1
	30	0	0	0	0	0	0	0	C1
	32	0	0	0	C1	0	0	C1	C1
	34	0	0	0	C1	0	0	C1	C1
	36	0	0	0	C1	0	0	C1	C1
	38	0	0	0	C1	0	0	C1	C1
	40	0	0	0	C1	0	C1	C1	C2
	42	0	0	C1	C1	0	C1	C1	C2

0 = No Reinforcement. **C1** = Single Reinforcement. **C2** = Double Reinforcement. **N/A** = Not Allowed. **PSF** = pounds per square ft.

Assumes floor load of 40 PSF live load at L/480, 10 PSF dead load and maximum simple joist spans. **PLF** = pounds per linear foot.

Exterior wall load 80 PLF w/ ≤ 36" window or door openings. For larger or multiple openings, additional jackstuds may be required.

Source: Engineered Lumber Residential Guide. Georgia-Pacific 10/2008.

Georgia Pacific WOODIBEAM™ I-Joist Basics

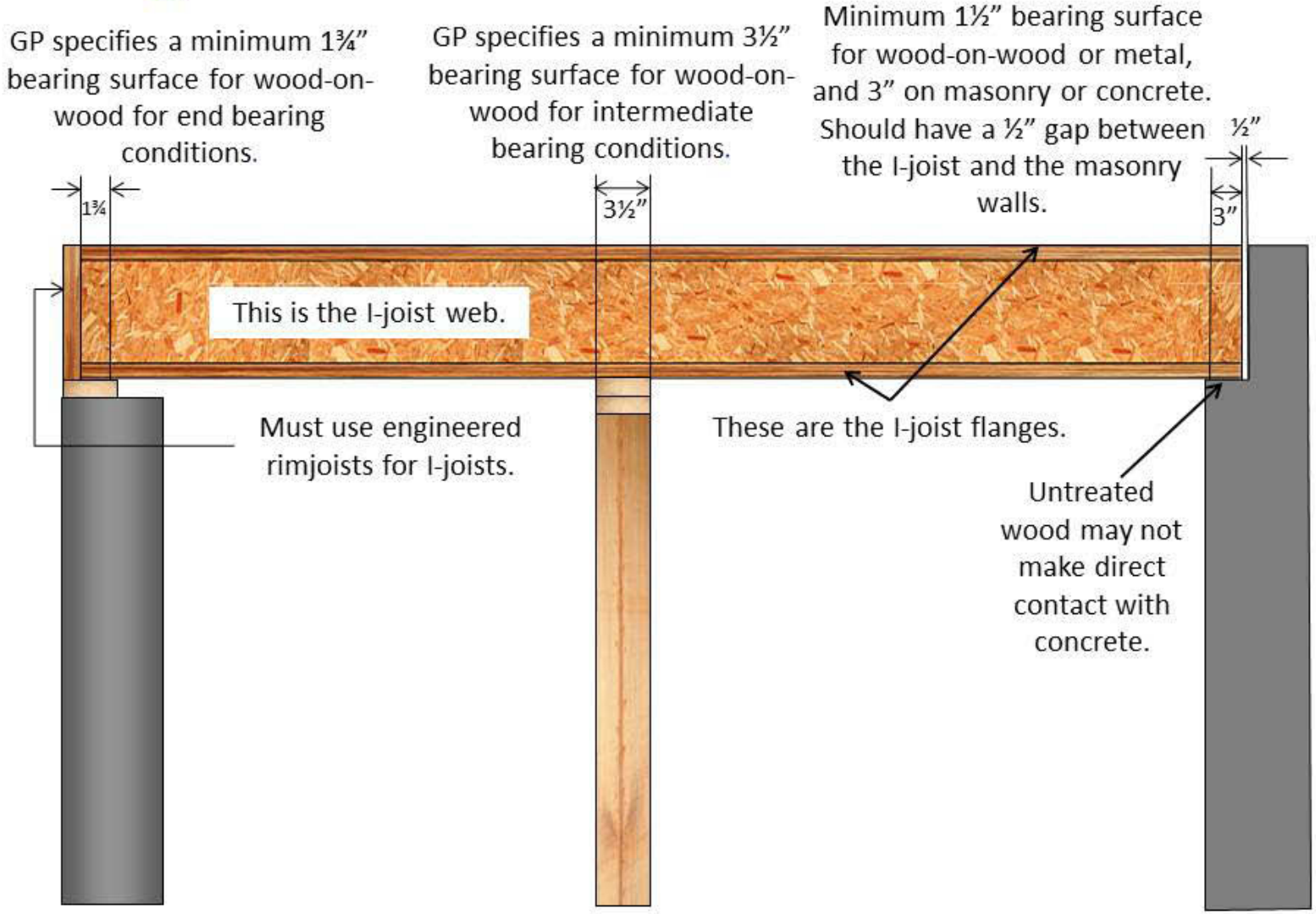

Georgia Pacific WOODIBEAM™ I-Joist Basics

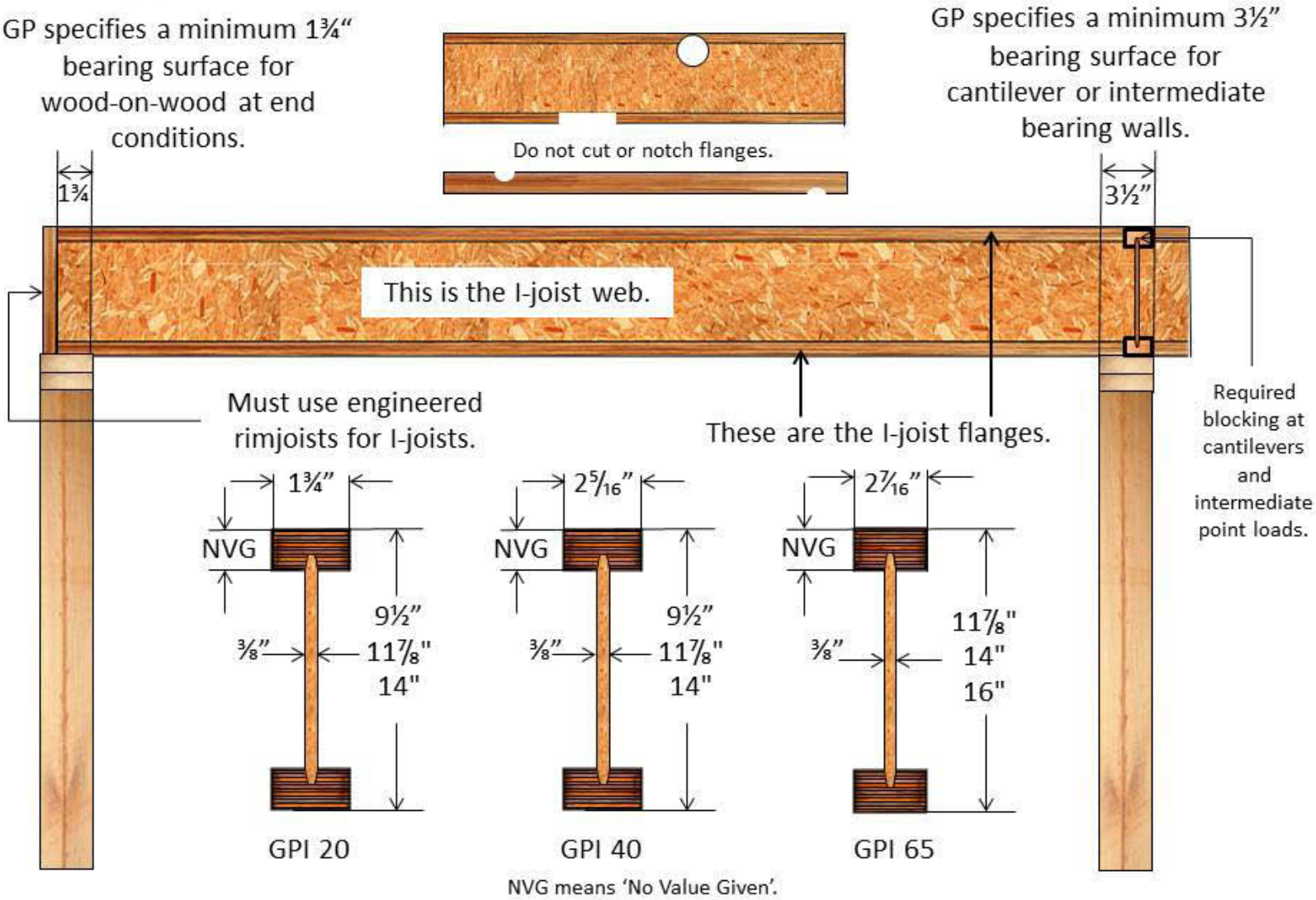

NVG means 'No Value Given'.

Georgia Pacific WOODIBEAM™ Hole Chart

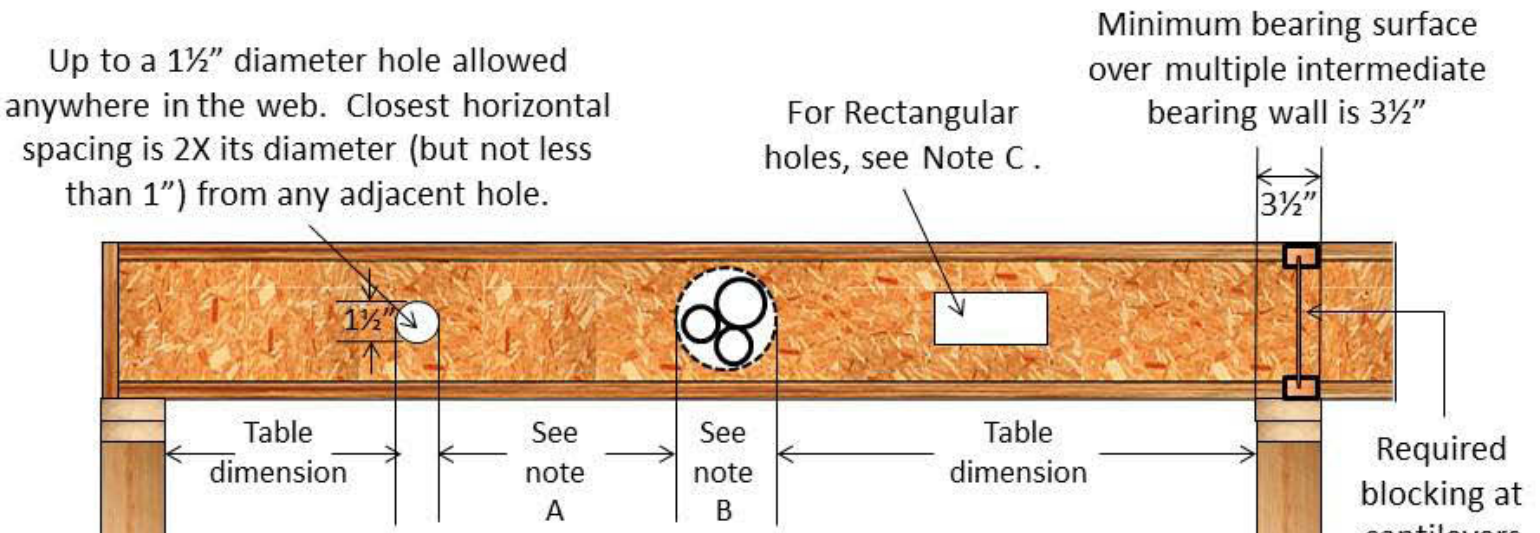

Note A: For holes greater than 1½" in diameter, the minimum clear distance is:

- For circular holes; 2X diameter of the largest hole
- A circular hole and a rectangular hole is the larger of 2X the hole diameter or twice the rectangular hole width.

Note B: A group of circular holes at roughly the same location is permitted if they meet the requirements of a single circular hole.

Note C: For rectangular holes, the longest side may not exceed 75% of a round hole diameter allowed at that location. (i.e. if an 8" hole is permitted, the longest side of a rectangular hole centered at that location is 8" X 0.75 = 6").

GP WOODIBEAM™ Installation Errors

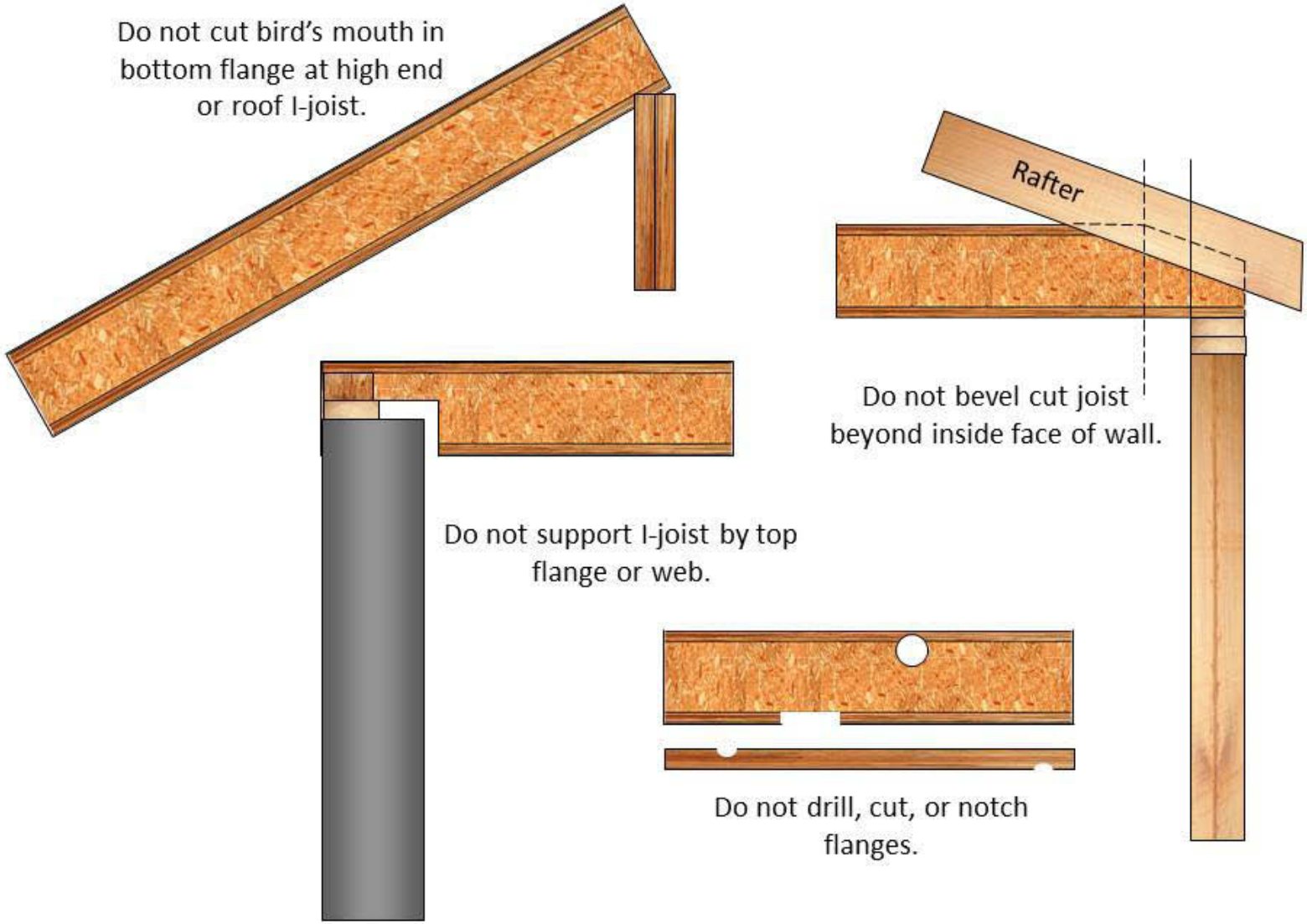

Min distances from **nearest edge of round hole** to nearest bearing face.															
I-Joist Dimensions		**GPI 20, 40, and 65 I-Joists with LVL flanges**													
		Distance From End, Intermediate, or Cantilever Supports													
Depth	**Clear Spans**	**Maximum Round Hole Dimension (See notes on conversion to rectangular holes.)**													
		2"	**3"**	**4"**	**5"**	**6"**	**6½"**	**7"**	**8"**	**8 7/8"**	**9'**	**10'**	**11"**	**12"**	**13"**
9 ½" (GPI 20 & GPI 40 only.)	**10'**	0'-6'	0'-6'	0'-9"	1'-9"	2'-9"	3'-6"	**N/A**	**N/A**	**N/A**	**N/A**	**N/A**	**N/A**	**N/A**	**N/A**
	12'	0'-6'	1'-0"	2'-0"	3'-0"	4'-3"	4'-9"	**N/A**	**N/A**	**N/A**	**N/A**	**N/A**	**N/A**	**N/A**	**N/A**
	14'	1'-0"	2'-0"	3'-0"	4'-3"	5'-6"	6'-0"	**N/A**	**N/A**	**N/A**	**N/A**	**N/A**	**N/A**	**N/A**	**N/A**
	16'	0'-6'	0'-6'	1'-9"	3'-6"	5'-0"	6'-0"	**N/A**	**N/A**	**N/A**	**N/A**	**N/A**	**N/A**	**N/A**	**N/A**
	18'	0'-6'	0'-6'	0'-9"	2'-3"	4'-6"	5'-6"	**N/A**	**N/A**	**N/A**	**N/A**	**N/A**	**N/A**	**N/A**	**N/A**
11 7/8"	**10'**	0'-6'	0'-6'	0'-9"	1'-0"	1'-0"	1'-0"	1'-3"	2'-3"	3'-3"	**N/A**	**N/A**	**N/A**	**N/A**	**N/A**
	12'	0'-6'	0'-6'	0'-9"	1'-0"	1'-6"	2'-0"	2'-6"	3'-9"	4'-9"	**N/A**	**N/A**	**N/A**	**N/A**	**N/A**
	14'	0'-6'	0'-6'	0'-9"	1'-9"	2'-9"	3'-6"	4'-0"	5'-0"	6'-3"	**N/A**	**N/A**	**N/A**	**N/A**	**N/A**
	16'	0'-6'	1'-0"	2'-0"	3'-0"	4'-0"	4'-9"	5'-3"	6'-6"	7'-6"	**N/A**	**N/A**	**N/A**	**N/A**	**N/A**
	18'	0'-6'	0'-6'	1'-3"	2'-6"	4'-0"	4'-9"	5'-6"	7'-0"	8'-6"	**N/A**	**N/A**	**N/A**	**N/A**	**N/A**
	20'	0'-6'	1'-3"	2'-6"	4'-0"	5'-3"	6'0"	6'-9"	8'-6"	**N/A**	**N/A**	**N/A**	**N/A**	**N/A**	**N/A**
	22'	0'-6'	0'-6'	1'-3"	3'-0"	4'-6"	5'-6"	6'-3"	8'-3"	10'-0"	**N/A**	**N/A**	**N/A**	**N/A**	**N/A**
	24'	0'-6'	0'-6'	0'-9"	1'-0"	2'-6"	3'-9"	4'-9"	7'-3"	9'-3"	**N/A**	**N/A**	**N/A**	**N/A**	**N/A**

N/A means Not Allowed or Not Applicable. Source: Wood I-Beam Joists, Engineered Lumber Residential Guide, Georgia Pacific Wood Products, 8/2008.

Note: Flange widths differ between GPI models. GPI 20 is 1¾", GPL 40 is 2 5/16", and GPI 65 is 2 7/16" .

Hole locations are based on worst case of simple and multiple spans with uniform floor loads of 40 PSF and live loads up to 20 PSF.

PSF = pounds per square foot.

For any condition not specifically noted, contact manufacturer or a registered design professional (RDP) for individual case analysis.

Selected Hanger Models: Georgia Pacific (GP) Models GPI 20, 40, & 60 I-Joist Series							
Single Joist Hangers: Simpson Strong-Tie (SST)							
Joist Series	Joist Depth	Face Mount	Nailing		Top Mount	Nailing	
			Header	Joist		Header	Joist
GPI 20	9½"	IUT9	10d	10d X 1½"	ITT9.5	10d X 1½"	10d X 1½"
	11⅞"	IUT11	10d	10d X 1½"	ITT11.88	10d X 1½"	10d X 1½"
	14"	IUT14	10d	10d X 1½"	ITT14	10d X 1½"	10d X 1½"
GPI 40	9½"	IUT 3510	10d	10d X 1½"	ITT359.5	10d X 1½"	10d X 1½"
	11⅞"	IUT 3512	10d	10d X 1½"	ITT3511.88	10d X 1½"	10d X 1½"
	14"	IUT 3514	10d	10d X 1½"	ITT3514	10d X 1½"	10d X 1½"
GPI 40 & 60	9½"	IUT310	10d	10d X 1½"	ITT39.5	10d X 1½"	10d X 1½"
	11⅞"	IUT312	10d	10d X 1½"	ITT311.88	10d X 1½"	10d X 1½"
	14"	IUT314	10d	10d X 1½"	ITT314	10d X 1½"	10d X 1½"
	16"	IUT316	10d	10d X 1½"	ITT316	10d X 1½"	10d X 1½"

Georgia Pacific (GP) Models GPI 20, 40, & 60 I-Joist Series				
Double Joist Hangers: Simpson Strong-Tie (SST)				
Joist Series	Joist Depth	Face Mount Only	Nailing	
			Header	Joist
GPI 20	9½"	MIU3.56/9	10d	10d X 1½"
	11⅞"	MIU3.56/11	10d	10d X 1½"
	14"	MIU3.56/14	10d	10d X 1½"
GPI 40	9½"	MIU4.75/9	10d	10d X 1½"
	11⅞"	MIU4.75/11	10d	10d X 1½"
	14"	MIU4.75/14	10d	10d X 1½"
GPI 40 & 60	9½"	MIU5.12/9	10d	10d X 1½"
	11⅞"	MIU5.12/11	10d	10d X 1½"
	14"	MIU5.12/14	10d	10d X 1½"
	16"	MIU5.12/16	10d	10d X 1½"

16d nails = 0.162" dia. X 3½" long. 10d nails = 0.148" dia. X 3" long. 10d X 1½" nails = 0.148" dia. X 1½" long.
TMP connectors may be used for slopes of 1:12 through 6:12. For greater slopes use TMPH series with web stiffeners.
Source: Georgia-Pacific Engineered Wood Residential Guide October 2008.

Min distances from **nearest edge of round hole** to nearest bearing face.															
I-Joist Dimensions		**GPI 20, 40, and 65 I-Joists with LVL flanges.**													
		Distance From End, Intermediate, or Cantilever Supports													
Depth	**Clear Spans**	**Maximum Round Hole Dimension (See notes on conversion to rectangular holes.)**													
		2"	**3"**	**4"**	**5"**	**6"**	**6½"**	**7"**	**8"**	**$8^7/_8$"**	**9'**	**10'**	**11"**	**12"**	**13"**
14"	**12'**	0'-6'	0'-6'	0'-9"	1'-0"	1'-0"	1'-0"	1'-0"	1'-3"	2'-3"	2'-3"	3'-6"	4'-6"	**N/A**	**N/A**
	14'	0'-6'	0'-6'	0'-9"	1'-0"	1'-0"	1'-0"	1'-6"	2'-6"	3'-6"	3'-9"	4'-9"	6'-0"	**N/A**	**N/A**
	16'	0'-6'	0'-6'	0'-9"	1'-0"	1'-9"	2'-3"	2'-9"	4'-0"	5'-0"	5'-0"	6'-3"	7'-6"	**N/A**	**N/A**
	18'	0'-6'	0'-6'	0'-9"	1'-0"	1'-6"	2'-0"	2'-9"	4'-0"	5'-3"	5'-3"	6'-9"	8'-6"	**N/A**	**N/A**
	20'	0'-6'	0'-6'	0'-9"	1'-3"	2'-6"	3'-3"	3'-9"	5'-3"	6'-6"	6'-9"	8'-3"	**N/A**	**N/A**	**N/A**
	22'	0'-6'	0'-6'	0'-9"	1'-0"	1'-3"	2'-0"	2'-9"	4'-6"	6'-0"	6'-3"	8'-0"	10'-3"	**N/A**	**N/A**
	24'	0'-6'	0'-6'	0'-9"	1'-0"	2'-6"	3'-3"	4'-3"	5'-9"	7'-6"	7'-9"	9'-9"	**N/A**	**N/A**	**N/A**
	26'	0'-6'	0'-6'	0'-9"	1'-0"	1'-3"	2'-3"	3'-3"	5'-0"	7'-0"	7'-3"	9'-6"	12'-0"	**N/A**	**N/A**
	28'	0'-6'	0'-6'	0'-9"	1'-0"	1'-0"	1'-9"	3'-0"	5'-0"	7'-0"	7'-3"	9'-9"	12'-3"	**N/A**	**N/A**
16" (GPI 65 only.)	**14'**	0'-6'	0'-6'	0'-9"	1'-0"	1'-0"	1'-0"	1'-0"	1'-0"	1'-0"	1'-3"	2'-3"	3'-6"	4'-6"	6'-0"
	16'	0'-6'	0'-6'	0'-9"	1'-0"	1'-0"	1'-0"	1'-0"	1'-6"	2'-6"	2'-6"	3'-9"	4'-9"	6'-0"	7'-3"
	18'	0'-6'	0'-6'	0'-9"	1'-0"	1'-0"	1'-0"	1'-0"	1'-0"	2'-3"	2'-3"	3'-9"	5'-0"	6'-6"	8'-3"
	20'	0'-6'	0'-6'	0'-9"	1'-0"	1'-0"	1'-0"	1'-0"	2'-3"	3'-6"	3'-9"	5'-0"	6'-6"	8'-3"	**N/A**
	22'	0'-6'	0'-6'	0'-9"	1'-0"	1'-0"	1'-0"	1'-0"	1'-0"	2'-6"	2'-9"	4'-3"	6'-0"	8'-0"	10'-0"
	24'	0'-6'	0'-6'	0'-9"	1'-0"	1'-0"	1'-0"	1'-0"	2'-3"	3'-9"	4'-0"	5'-9"	7'-6"	9'-6"	**N/A**
	26'	0'-6'	0'-6'	0'-9"	1'-0"	1'-0"	1'-0"	1'-0"	1'-0"	2'-9"	3'-0"	5'-0"	7'-0"	9'-3"	11'-9"
	28'	0'-6'	0'-6'	0'-9"	1'-0"	1'-0"	1'-0"	1'-0"	2'-3"	4'-0"	4'-3"	6'-3"	8'-6"	10'-9"	**N/A**
	30'	0'-6'	0'-6'	0'-9"	1'-0"	1'-0"	1'-0"	1'-0"	2'-0"	3'-9"	4'-0"	6'-3"	8'-6"	11'-0"	13'-9"

N/A means Not Allowed or Not Applicable. Source: Wood I-Beam Joists, Engineered Lumber Residential Guide, Georgia Pacific Wood Products, 8/2008.

Note: Flange widths differ between GPI models. GPI 20 is 1¾", GPL 40 is 2 $^5/_{16}$", and GPI 65 is 2 $^7/_{16}$" .

Hole locations are based on worst case of simple and multiple spans with uniform floor loads of 40 PSF and live loads up to 20 PSF.

PSF = pounds per square foot.

For any condition not specifically noted, contact manufacturer or a registered design professional (RDP) for individual case analysis.

Selected Hanger Models: Georgia Pacific (GP) Models GPI 20, 40, & 60 I-Joist Series							
Single Joist Hangers: United Steel Products (USP)							
Joist Series	Joist Depth	Face Mount	Nailing		Top Mount	Nailing	
			Header	Joist		Header	Joist
GPI 20	9½"	THF17925	10d	10d X 1½"	THO17950	10d X 1½"	10d X 1½"
	11⅞"	THF17112	10d	10d X 1½"	THO17118	10d X 1½"	10d X 1½"
	14"	THF17140	10d	10d X 1½"	THO17140	10d X 1½"	10d X 1½"
GPI 40	9½"	THF23925	10d	10d X 1½"	THO23950	10d X 1½"	10d X 1½"
	11⅞"	THF23118	10d	10d X 1½"	THO23118	10d X 1½"	10d X 1½"
	14"	THF23140	10d	10d X 1½"	THO23140	10d X 1½"	10d X 1½"
GPI 40 & 60	9½"	THF25925	10d	10d X 1½"	THO25950	10d X 1½"	10d X 1½"
	11⅞"	THF25112	10d	10d X 1½"	THO25118	10d X 1½"	10d X 1½"
	14"	THF25140	10d	10d X 1½"	THO25140	10d X 1½"	10d X 1½"
	16"	THF25160	10d	10d X 1½"	THO25160	10d X 1½"	10d X 1½"

Georgia Pacific (GP) Models GPI 20, 40, & 60 I-Joist Series				
Double Joist Hangers: United Steel Products (USP)				
Joist Series	Joist Depth	Face Mount Only	Nailing	
			Header	Joist
GPI 20	9½"	THF35925	10d	10d X 1½"
	11⅞"	THF35112	10d	10d X 1½"
	14"	THF35140	10d	10d X 1½"
GPI 40	9½"	THF23950-2	10d	10d X 1½"
	11⅞"	THF23118-2	10d	10d X 1½"
	14"	THF23140-2	10d	10d X 1½"
GPI 40 & 60	9½"	THF25925-2	10d	10d
	11⅞"	THF25112-2	10d	10d
	14"	THF25140-2	10d	10d
	16"	THF25160-2	10d	10d

TMP connectors may be used for slopes of 1:12 through 6:12. For greater slopes use TMPH series with web stiffeners.
Source: Georgia-Pacific Engineered Wood Residential Guide October 2008.
16d nails = 0.162" dia. X 3½" long. 10d nails = 0.148" dia. X 3" long. 10d X 1½" nails = 0.148" dia. X 1½" long.

Georgia Pacific (GP) Models GPI 20, 40, & 60 I-Joist Series				
Variable Slope Seat Connectors: Simpson Strong-Tie (SST)				
Joist Series	Joist Depth	Seat Model #	Nailing	
			Header	Joist
GPI 20	9½"	VPA 25	10d	10d X 1½"
	11⅞"	VPA 25	10d	10d X 1½"
	14"	VPA 25	10d	10d X 1½"
GPI 40	9½"	VPA 35	10d	10d X 1½"
	11⅞"	VPA 35	10d	10d X 1½"
	14"	VPA 35	10d	10d X 1½"
GPI 40 & 60	9½"	VPA 3	10d	10d X 1½"
	11⅞"	VPA 3	10d	10d X 1½"
	14"	VPA 3	10d	10d X 1½"
	16"	VPA 3	10d	10d X 1½"

Georgia Pacific (GP) Models GPI 20, 40, & 60 I-Joist Series				
Variable Slope & Skew Seat Hanger: Simpson Strong-Tie (SST)				
Joist Series	Joist Depth	Face Mount Only	Nailing	
			Header	Joist
GPI 20	9½"	LSSU125	10d	10d X 1½"
	11⅞"	LSSU125	10d	10d X 1½"
	14"	LSSU125	10d	10d X 1½"
GPI 40	9½"	LSSU135	10d	10d X 1½"
	11⅞"	LSSU135	10d	10d X 1½"
	14"	LSSU135	10d	10d X 1½"
GPI 40 & 60	9½"	LSSUH310	10d	10d X 1½"
	11⅞"	LSSUH310	10d	10d X 1½"
	14"	LSSUH310	10d	10d X 1½"
	16"	LSSUH310	10d	10d X 1½"

16d nails = 0.162" dia. X 3½" long. 10d nails = 0.148" dia. X 3" long. 10d X 1½" nails = 0.148" dia. X 1½" long.
TMP connectors may be used for slopes of 1:12 through 6:12. For greater slopes use TMPH series with web stiffeners.
Source: Georgia-Pacific Engineered Wood Residential Guide October 2008.

Georgia Pacific (GP) Models GPI 20, 40, & 60 I-Joist Series				
Variable Slope Seat Connectors: United Steel Products (USP)				
Joist Series	Joist Depth	Seat Model #	Nailing	
			Header	Joist
GPI 20	9½"	TMP175	10d	10d X 1½"
	11⅞"	TMP175	10d	10d X 1½"
	14"	TMP175	10d	10d X 1½"
GPI 40	9½"	TMP23	10d	10d X 1½"
	11⅞"	TMP23	10d	10d X 1½"
	14"	TMP23	10d	10d X 1½"
GPI 40 & 60	9½"	TMP25	10d	10d X 1½"
	11⅞"	TMP25	10d	10d X 1½"
	14"	TMP25	10d	10d X 1½"
	16"	TMP25	10d	10d X 1½"

Georgia Pacific (GP) Models GPI 20, 40, & 60 I-Joist Series				
Variable Slope & Skew Seat Hanger: United Steel Products (USP)				
Joist Series	Joist Depth	Face Mount Only	Nailing	
			Header	Joist
GPI 20	9½"	LSSH179	10d	10d X 1½"
	11⅞"	LSSH179	10d	10d X 1½"
	14"	LSSH179	10d	10d X 1½"
GPI 40	9½"	LSSH23	10d	10d X 1½"
	11⅞"	LSSH23	10d	10d X 1½"
	14"	LSSH23	10d	10d X 1½"
GPI 40 & 60	9½"	LSSH25	10d	10d X 1½"
	11⅞"	LSSH25	10d	10d X 1½"
	14"	LSSH25	10d	10d X 1½"
	16"	LSSH25	10d	10d X 1½"

TMP connectors may be used for slopes of 1:12 through 6:12. For greater slopes use TMPH series with web stiffeners.
Source: Georgia-Pacific Engineered Wood Residential Guide October 2008.
16d nails = 0.162" dia. X 3½" long. 10d nails = 0.148" dia. X 3" long. 10d X 1½" nails = 0.148" dia. X 1½" long.

Georgia Pacific Lam® LVL Headers and Beams

Minimum clearance between holes:
2 X the diameter of the largest hole.

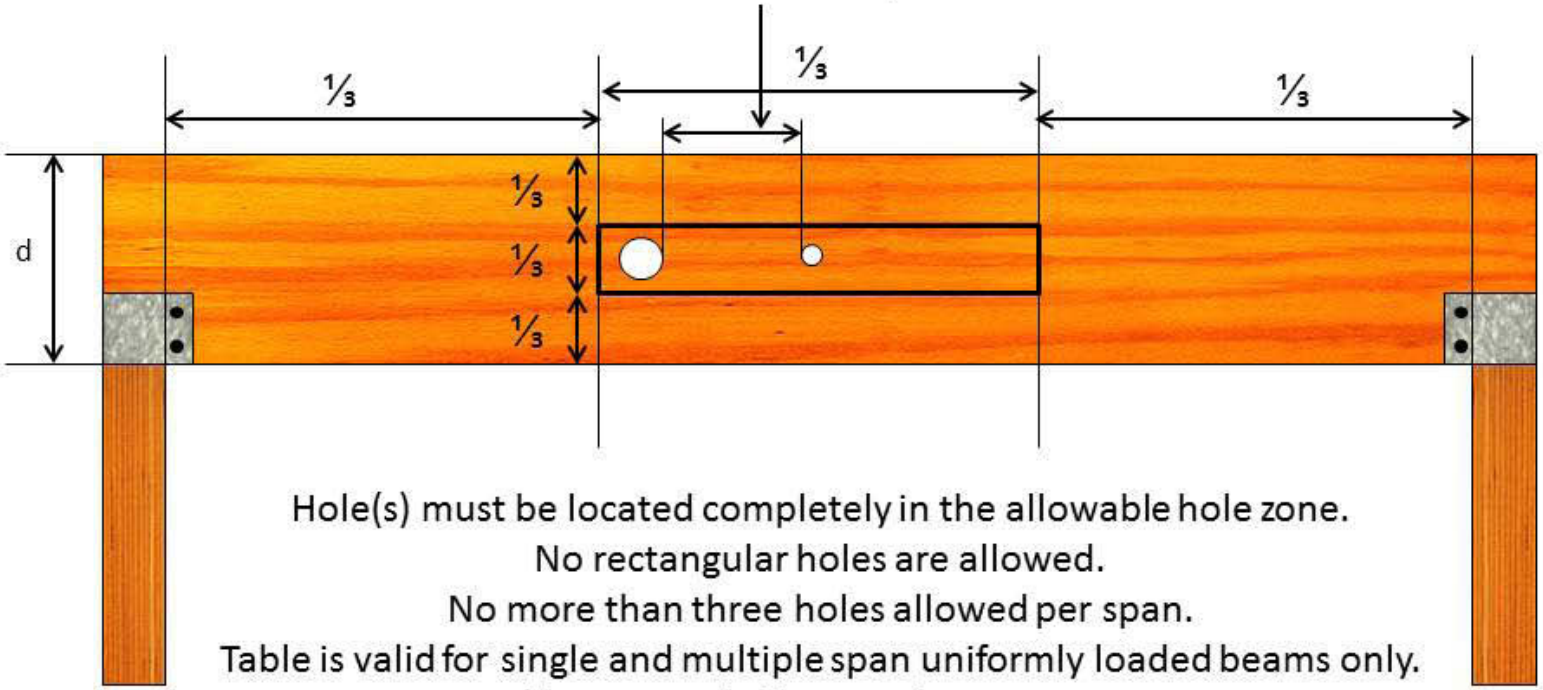

Hole(s) must be located completely in the allowable hole zone.
No rectangular holes are allowed.
No more than three holes allowed per span.
Table is valid for single and multiple span uniformly loaded beams only.
Table is not valid for cantilever sections.
Hole location, clearance and the effects of beam deflection should be considered to avoid problems with piping.

Source: Georgia Pacific Engineered Lumber Installation Guide. 2/09 GEO-TM Lit. Item #127520

Georgia Pacific GP Lam LVL			Georgia Pacific GP Lam LVL		
Simpson Strong-Tie® Connectors: Top Mount Hangers			USP Structural Connectors™: Top Mount Hangers		
Supported Member Width	Supported Member Depth	Hanger	Supported Member Width	Supported Member Depth	Hanger
1¾"	7¼"	WP1.81/7.25	1¾"	7¼"	PHXU17725
	9¼"	WP9.25		9¼"	BPH17925
	9½"	WP9		9½"	BPH1795
	11¼"	LBV1.81/11.25		11¼"	BPH17112
	11⅞"	WP11		11⅞"	BPH17118
	14"	WP14		14"	BPH1714
3½": Two plies of 1¾" LVL Or One ply of 3½" LVL	7¼"	WPU3.56/7.25	3½": Two plies of 1¾" LVL Or One ply of 3½" LVL	7¼"	N/A
	9¼"	HWU3.56/9.25		9¼"	LBH35925
	9½"	HWU3.56/9.5		9½"	LBH3595
	11¼"	HWU3.56/11.25		11¼"	LBH35112
	11⅞"	HWU3.56/11.25		11⅞"	LBH35118
	14"	HWU3.56/14		14"	LBH3514
	16"	HWU3.56/16		16"	LBH3516
	18"	HWU3.56/18		18"	LBH3518
	24"	HW1424		24"	LBH53524
5¼": Three plies of 1¾" LVL	7¼"	WPU5.50/7.25	5¼": Three plies of 1¾" LVL	7¼"	N/A
	9¼"	GLTV5.50/9.25		9¼"	HLBH52925
	9½"	HGLTV5.59		9½"	HLBH5295
	11¼"	GLTV5.50/11.25		11¼"	HLBH52112
	11⅞"	HGLTV5.511		11⅞"	HLBH52118
	14"	HGLTV5.514		14"	HLBH5214
	16"	HGLTV5.516		16"	HLBH5216
	18"	HGLTV5.518		18"	HLBH5218
	24"	N/A		24"	N/A
7": Four plies of 1¾" LVL Or Two plies of 3½" LVL	9¼"	GLTV49.25-2	7": Four plies of 1¾" LVL Or Two plies of 3½" LVL	9¼"	HLBH71925
	9½"	GLTV49.5-2		9½"	HLBH7195
	11¼"	GLTV411.2-2		11¼"	HLBH71112
	11⅞"	HGLTV411.88-2		11⅞"	HLBH71118
	14"	HGLTV414-2		14"	HLBH7114
	16"	HGLTV416-2		16"	HLBH7116
	18"	HGLTV418-2		18"	HLBH7118
	24"	HGLTV7.12/24		24"	HLBH7124

Source: Georgia-pacific (2008).Georgia-Pacific Engineered Lumber Residential Guide.

Nail types and sizes for headers and joists not given.

16d nails = 0.162" dia. X 3½" long. 10d nails = 0.148" dia. X 3" long.
10d X 1½" nails = 0.148" dia. X 1½" long.

Appendix I: iLevel Details

TJI Type 0 Bearing Cantilever No Reinforcement

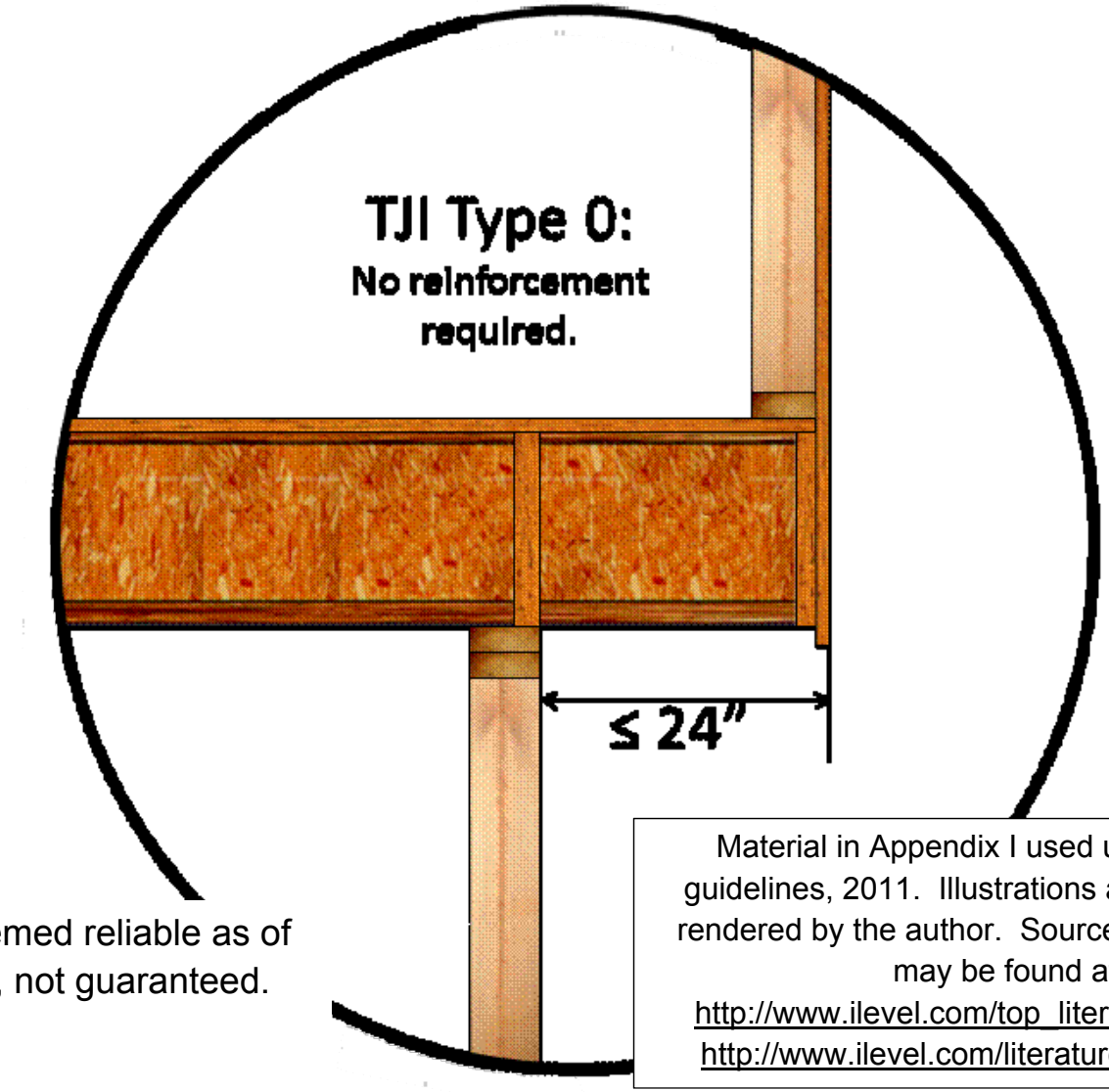

Note: Information deemed reliable as of the time of this writing, not guaranteed.

Material in Appendix I used under fair use guidelines, 2011. Illustrations and tables were rendered by the author. Source documentation may be found at http://www.ilevel.com/top_literature.aspx and http://www.ilevel.com/literature/TJ-9000.pdf.

TJI Type 0 Brick Ledge Cantilever No Reinforcement

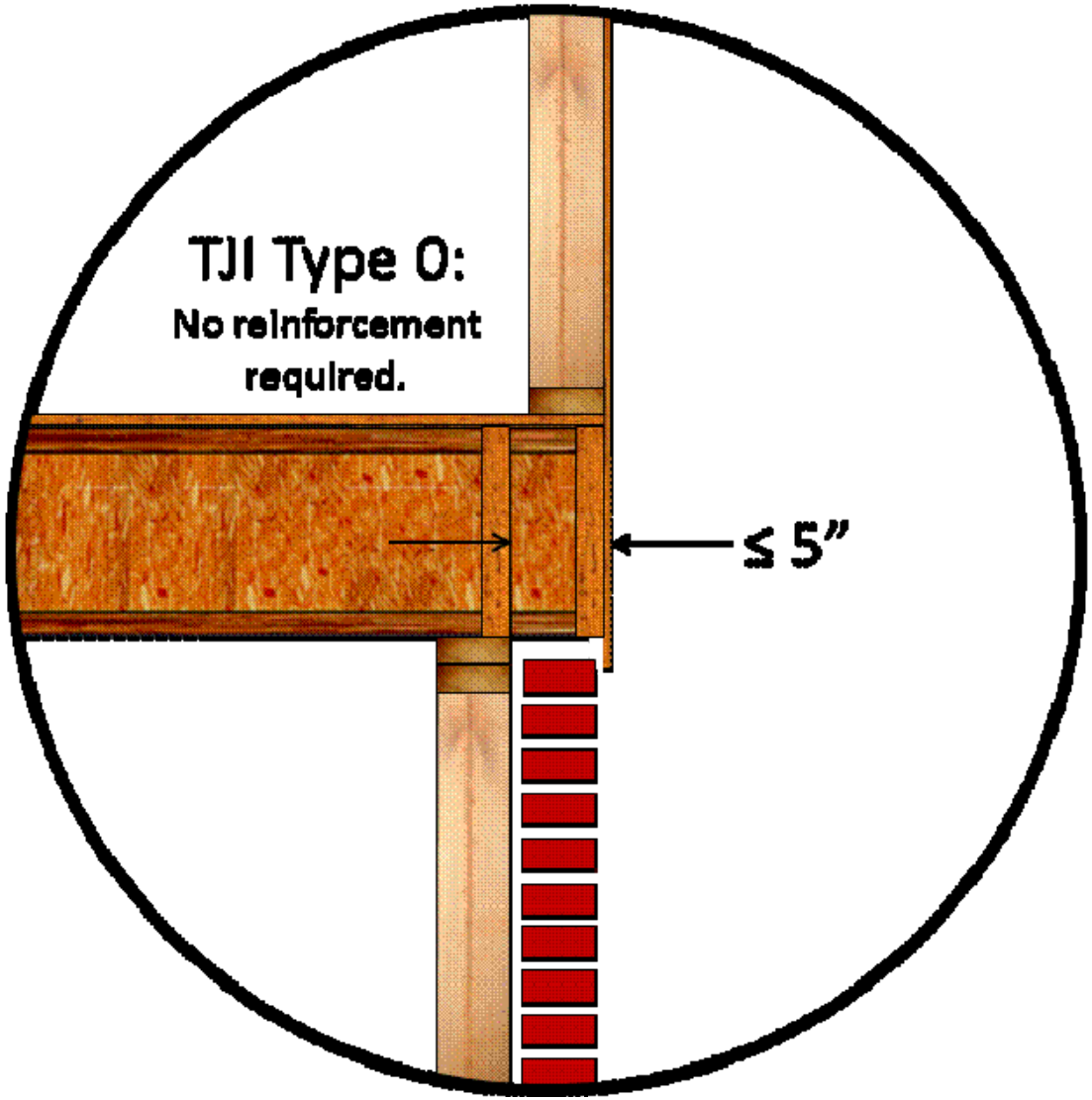

TJI Type E1W Cantilever Reinforcement

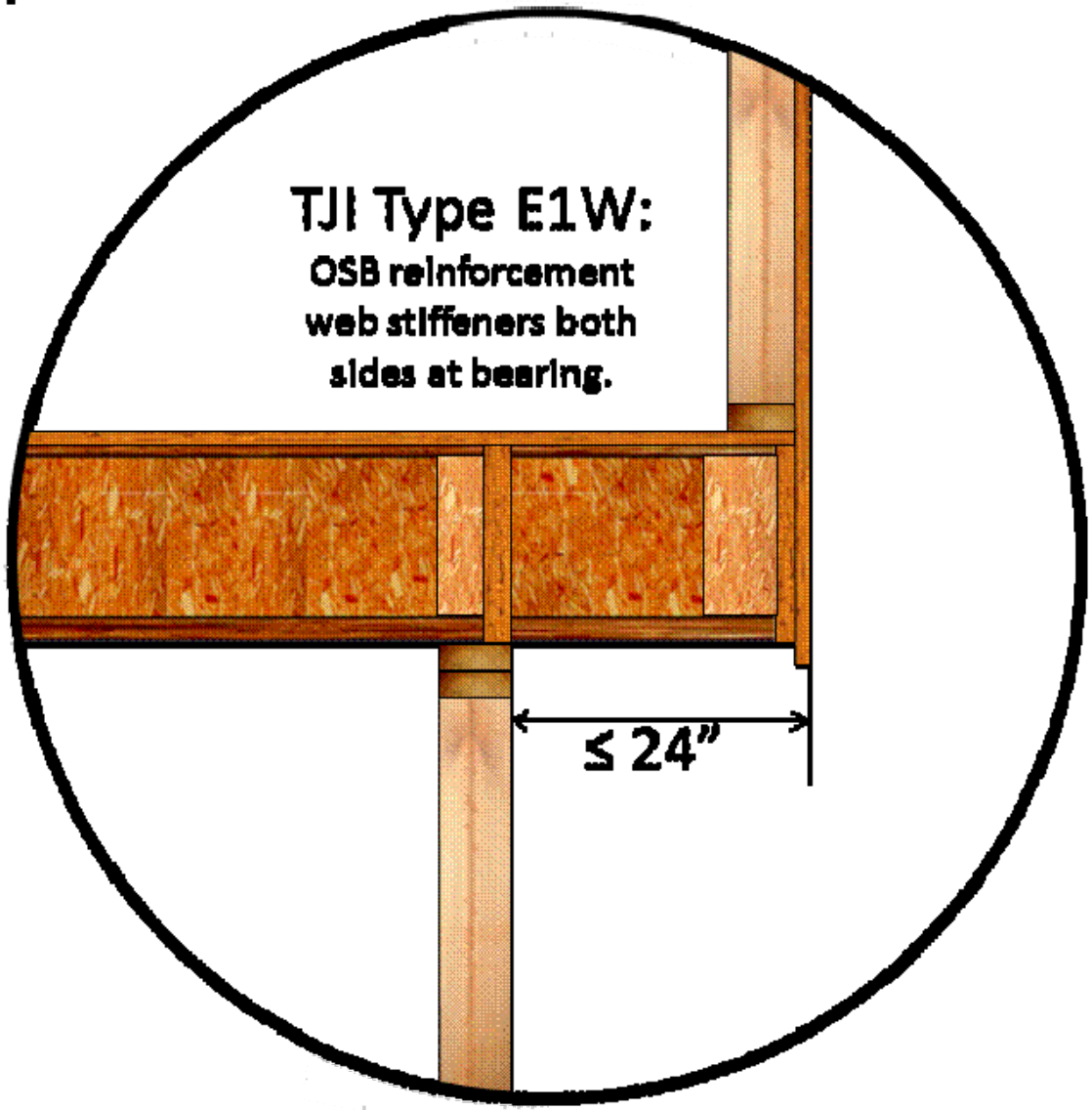

TJI Type E2 Cantilever Reinforcement

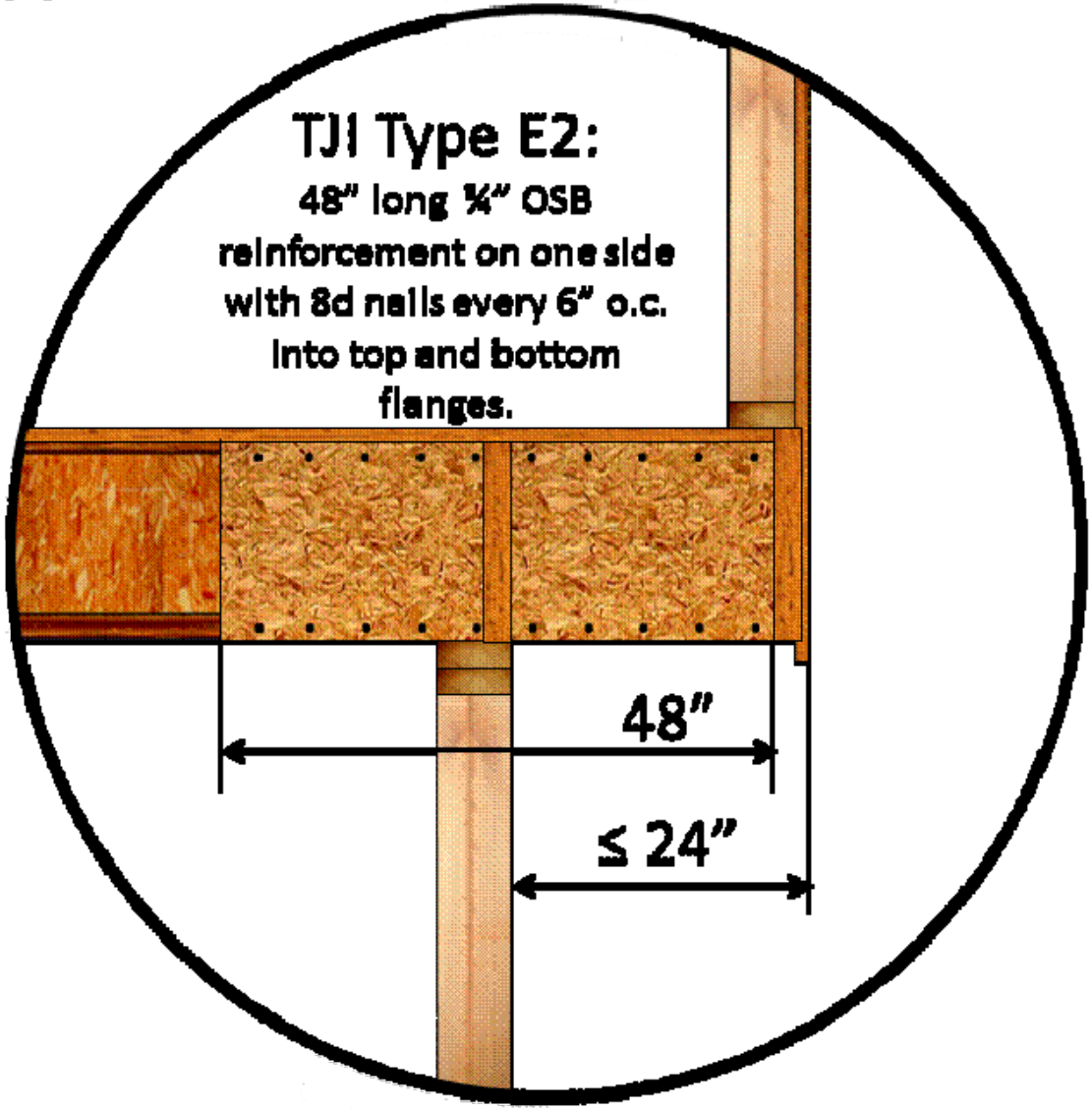

TJI Type E3 Cantilever Reinforcement

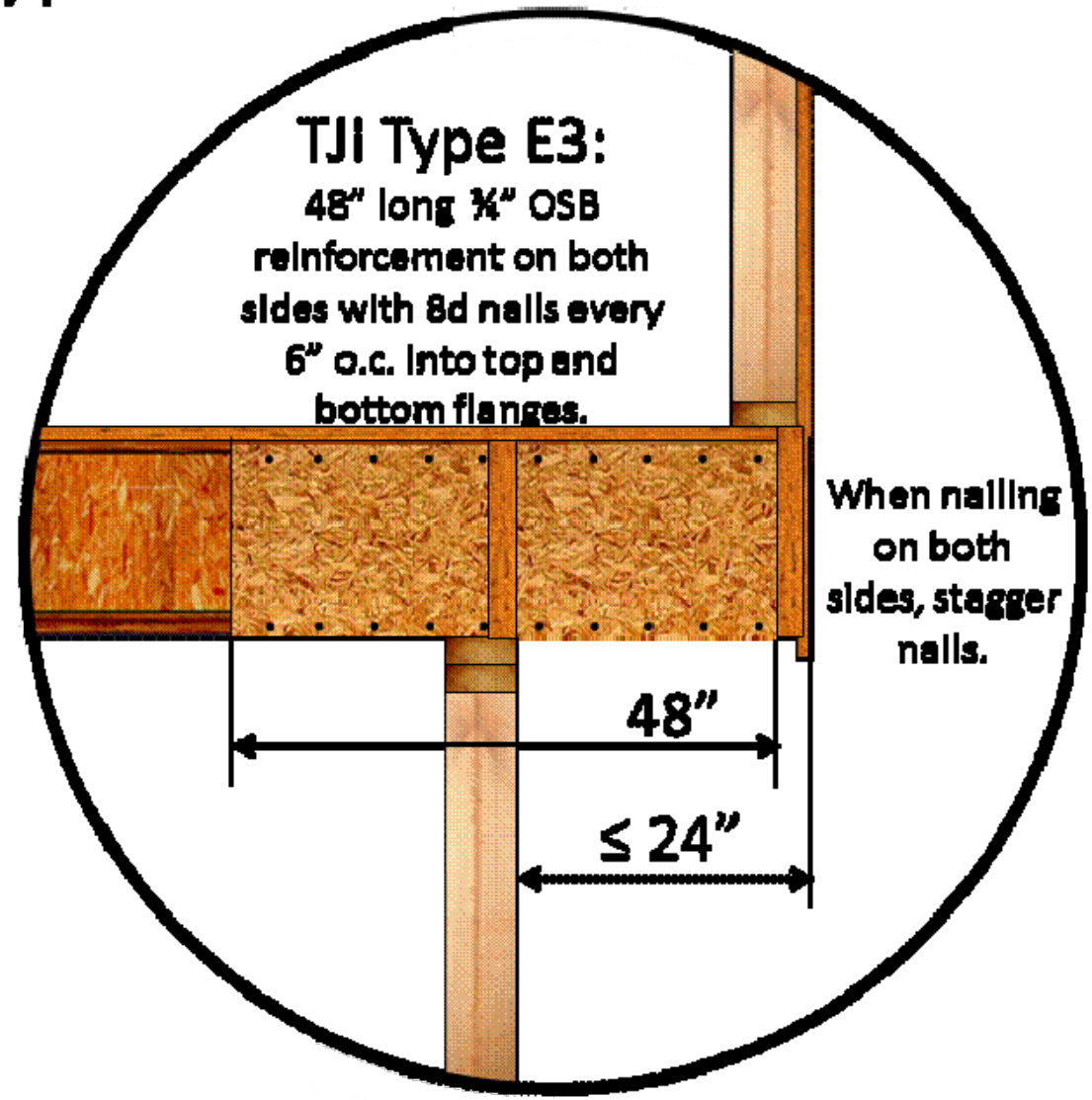

TJI Type E5 Brick Ledge Cantilever

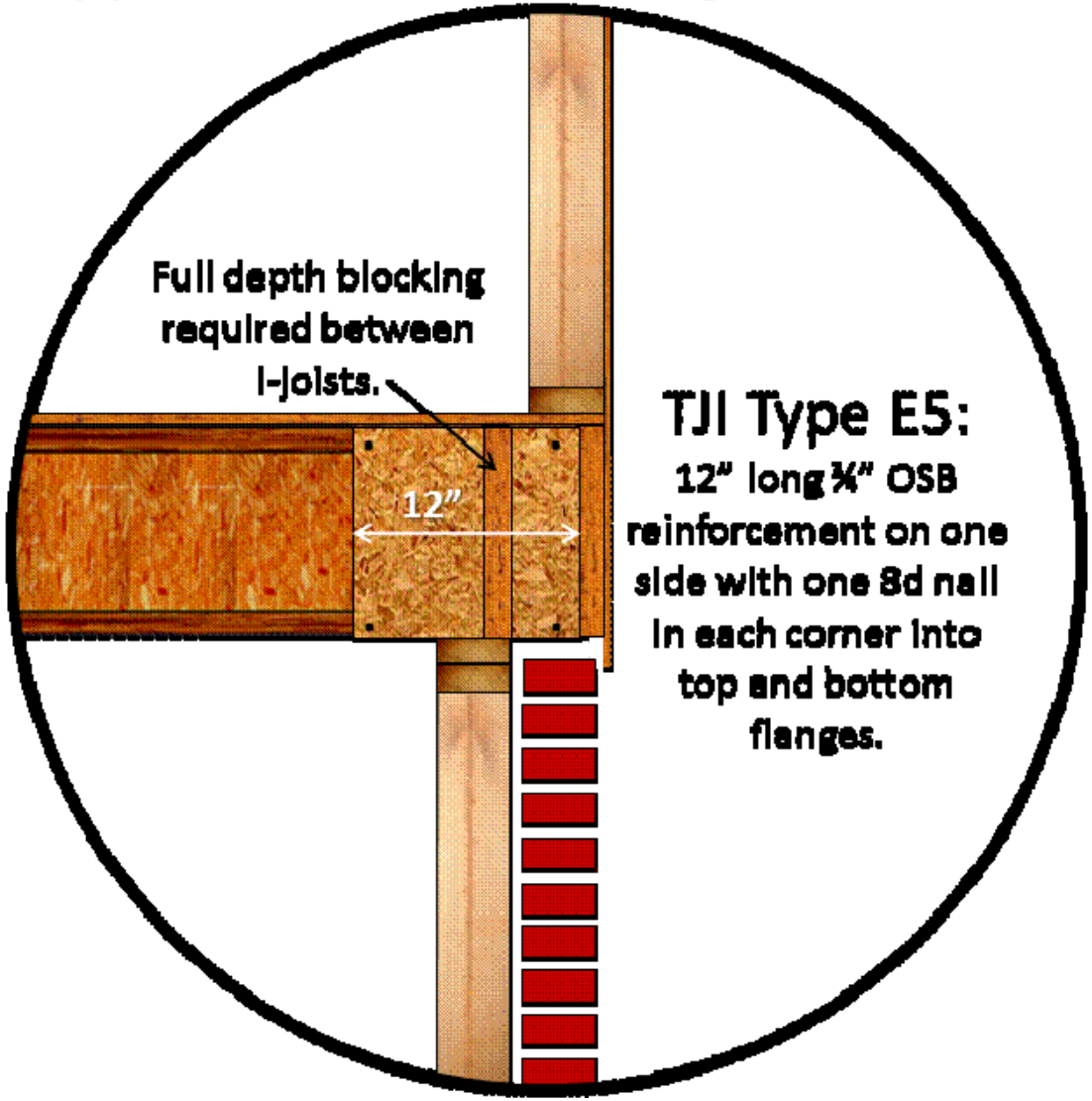

TJI Type E6 Brick Ledge Cantilever

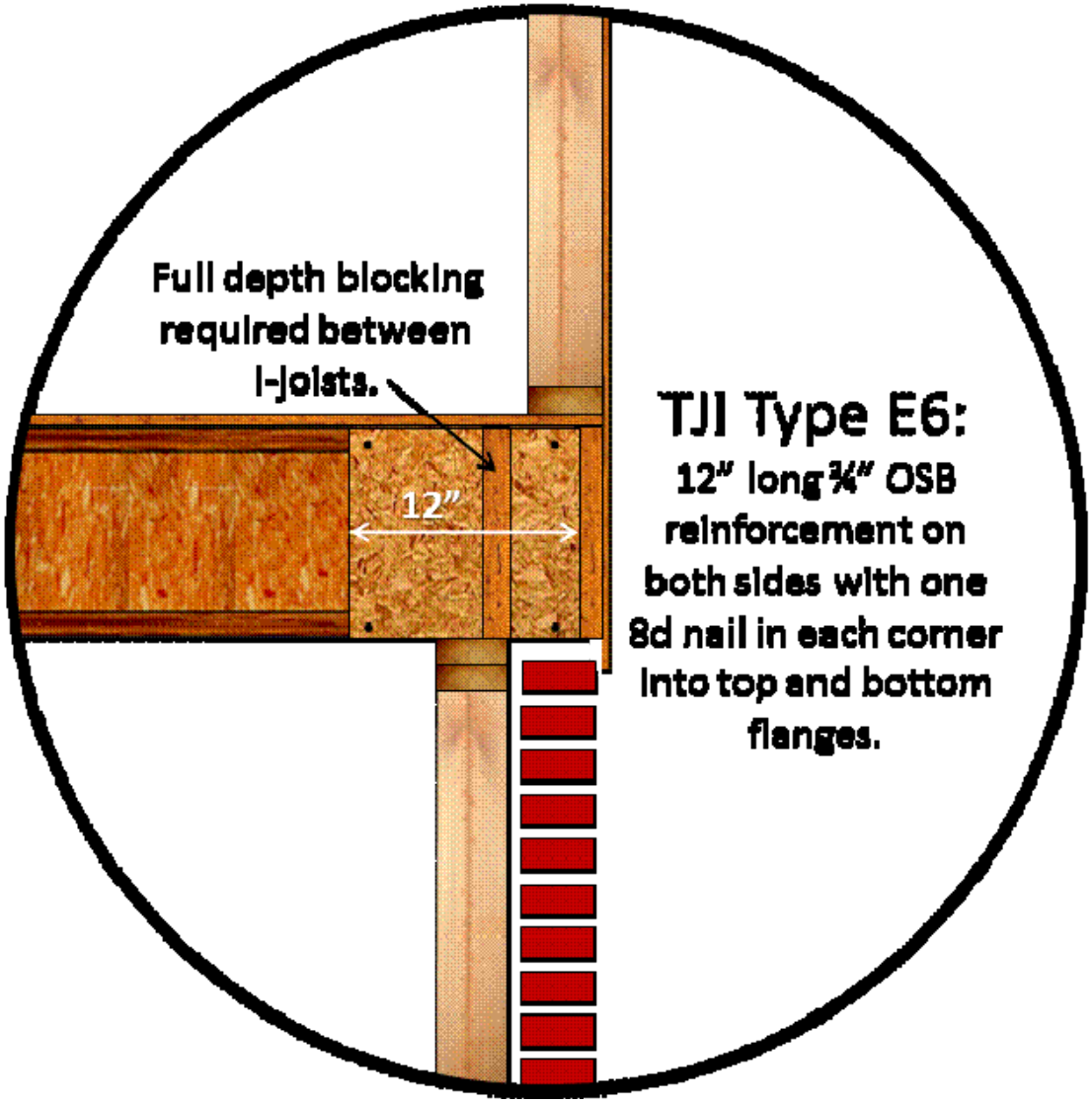

Trus Joist TJI Section A: Cantilevers less than 5" (Brick Ledge)								
Depth	Series	Roof Truss Span o.c. with 24" overhang.	Based on 15 PSF roof dead load (horizontal projection) & 80 PLF exterior wall load w/ 3'-0" max width window or door openings. Larger or multiple openings may require additonal jack studs.					
			35 PSF Roof Total Load			45 PSF Roof Total Load		
			16"	19.2"	24"	16"	19.2"	24"
9½" 11⅞" 14" 16"	230	24 ft	0	0	E5	0	E5	E5
		26 ft	0	E5	E5	0	E5	E5
		28 ft	0	E5	E5	E5	E5	E5
		30 ft	0	E5	E5	E5	E5	E5
		32 ft	E5	E5	E5	E5	E5	E6
		34 ft	E5	E5	N/A	E5	E5	N/A

Key: **0** = No cantilever reinforcement. **E5** = 12" length of ¾" OSB reinforcement on one side, full depth block required between joists. Attach to joist flanges with one 8d nail at each corner. **E6** = 12" length of ¾" OSB reinforcement on both sides, Full depth block required between joists. Attach to joist flanges with one 8d nail at each corner. **N/A** = not allowed.

Trus Joist TJI Section B: Cantilevers 5" - 24"								
Depth	Series	Roof Truss Span o.c. with 24" overhang.	Based on 15 PSF roof dead load (horizontal projection) & 80 PLF exterior wall load w/ 3'-0" max width window or door openings. Larger or multiple openings may require additonal jack studs.					
			35 PSF Roof Total Load			45 PSF Roof Total Load		
			16"	19.2"	24"	16"	19.2"	24"
9½" 11⅞" 14" 16"	230	24 ft	0	0	0	0	0	E2
		26 ft	0	0	0	0	0	E2
		28 ft	0	0	0	0	0	E2
		30 ft	0	0	E2	0	E2	E3
		32 ft	0	0	E2	0	E2	N/A
		34 ft	0	E2	E3	E2	E3	N/A

Key: **0** = No cantilever reinforcement. **E2** = 48" length of ¾" OSB reinforcement on one side (face grain horizontal), full depth block required between joists. Attach to joist flanges with 8d nails at 6" on center. **E3** = 48" length of ¾" OSB reinforcement on both sides (face grain horizontal), full depth block required between joists. Attach to joist flanges with 8d staggered nails at 6" on center. **N/A** = not allowed.

Source: TJI Joist Specifier's Guide. TJ-4000. August 2010.

Note: For **doubled I-joist cantilevers**, the second member must be at least 72' long. Filler blocking is required, and is attached to I-joist webs with three rows of 10d nails at 6" on center, clinched. Use 48" length with 9½" and 11⅞" deep joists, attached to joist webs with two rows of 10d nails at 6" on center.

Trus Joist TJI Section A: Cantilevers less than 5" (Brick Ledge)								
Depth	Series	Roof Truss Span o.c. with 24" overhang.	Based on 15 PSF roof dead load (horizontal projection) & 80 PLF exterior wall load w/ 3'-0" max width window or door openings. Larger or multiple openings may require additonal jack studs.					
			35 PSF Roof Total Load			45 PSF Roof Total Load		
			16"	19.2"	24"	16"	19.2"	24"
9½" 11⅞" 14" 16"	360	28 ft	0	0	E5	0	E5	E5
		30 ft	0	E5	E5	0	E5	E5
		32 ft	0	E5	E5	E5	E5	E5
		34 ft	0	E5	E5	E5	E5	E5
		36 ft	0	E5	E5	E5	E5	E5
		38 ft	E5	E5	E5	E5	E5	E5
		40 ft	E5	E5	E5	E5	E5	E5

Key: 0 = No cantilever reinforcement. E5 = 12" length of ¾" OSB reinforcement on one side, full depth block required between joists. Attach to joist flanges with one 8d nail at each corner. N/A = not allowed.

Source: TJI Joist Specifier's Guide. TJ-4000. August 2010.

Trus Joist TJI Section B: Cantilevers 5" - 24"								
Depth	Series	Roof Truss Span o.c. with 24" overhang.	Based on 15 PSF roof dead load (horizontal projection) & 80 PLF exterior wall load w/ 3'-0" max width window or door openings. Larger or multiple openings may require additonal jack studs.					
			35 PSF Roof Total Load			45 PSF Roof Total Load		
			16"	19.2"	24"	16"	19.2"	24"
9½" 11⅞" 14" 16"	360	28 ft	0	0	0	0	0	0
		30 ft	0	0	0	0	0	E1W
		32 ft	0	0	0	0	0	E2
		34 ft	0	0	0	0	0	E2
		36 ft	0	0	E1W	0	0	E2
		38 ft	0	0	E1W	0	0	E2
		40 ft	0	0	E1W	0	E1W	E2

Key: **0** = No cantilever reinforcement. **E1W** = Web stiffeners required on boths sides of single cantilevered I-joist at full depth blocking panel areas. **Note:** Blocking panels for I-joist depths of 11⅞", 14", and 16" may have up to an 8" hole hole, 9½" depth or cantilevers shorter than 12" may have a 6" hole. Do not cut flanges of I-joist blocking panels. **E2** = 48" length of ¾" OSB reinforcement on one side (face grain horizontal), full depth block required between joists. Attach to joist flanges with 8d nails at 6" on center. **N/A** = not allowed.

For **dimension lumber cantilevers** used with I-joists, use a wood backer block and nail through lumber, backer, and joist web with two rows of 10d nails at 6" on center, clinched. Lumber bears on sill plate. May only be used for uniform loading conditions.

i-Level TJI® I-Joist Hole Tables

General Rules for Holes in i-Level I-Joist Webs: See Charts and Illustrations for More Details.

1) Never cut or notch I-joist flanges!
2) Never cut holes larger than 1½" in cantilever. Never cut holes in cantilever reinforcement.
3) Holes may be located anywhere vertically in the web. Leave ≥ ⅛" of web closest to flange.
4) Minimum distances are from the closest edge of the hole to the nearest bearing face.
5) For simple span uniformly loaded I-joists (minimum length of 5'-0"), one maximum size round hole can be placed in the center of the joist span provided no other holes are cut.
6) All distances are based on uniform loading conditions. For all other cases, contact i-Level.
7) Never cut holes in the 6"x6" and 6"X6"X6" shaded areas at bearing surfaces.

Table A	End Support				TJI 230 Series I-Joists Table C1.1				
I-Joist	Allowable **Round** Hole Size								
Depth	2"	3"	4"	5"	6½"	7"	8⁷/₈"	11"	13"
9 ½"	1'-0"	2'-0"	2'-6"	3'-6"	5'-6"	N/A	N/A	N/A	N/A
11⁷/₈"	1'-0"	1'-0"	1'-0"	2'-0"	3'-0"	3'-6"	6'-0"	N/A	N/A
14"	1'-0"	1'-0"	1'-0"	1'-0"	1'-6"	2'-0"	3'-6"	6'-6"	N/A
16"	1'-0"	1'-0"	1'-0"	1'-0"	1'-0"	1'-0"	2'-0"	4'-0"	6'-6"

Table A	End Support				TJI 230 Series I-Joists Table R1.1				
I-Joist	Allowable **Square or Rectangular** Hole Size Based on Measurement of Longest Side								
Depth	2"	3"	4"	5"	6½"	7"	8⁷/₈"	11"	13"
9 ½"	1'-0"	2'-0"	3'-0"	4'-6"	5'-0"	N/A	N/A	N/A	N/A
11⁷/₈"	1'-0"	1'-0"	2'-0"	3'-0"	5'-6"	5'-6"	7'-0"	N/A	N/A
14"	1'-0"	1'-0"	1'-0"	2"-0"	4'-0"	5'-0"	7'-0"	9'-0"	N/A
16"	1'-0"	1'-0"	1'-0"	1'-0"	3'-0"	3'-6"	7'-0"	9'-0"	11'-0"

Table B	Intermediate or Cantilever Support				TJI 230 Series I-Joists Table C2.1				
I-Joist	Allowable **Round** Hole Size								
Depth	2"	3"	4"	5"	6½"	7"	8⁷/₈"	11"	13"
9 ½"	2'-6"	3'-0"	4'-0"	5'-0"	8'-0"	N/A	N/A	N/A	N/A
11⁷/₈"	1'-0"	2"-0"	2'-6"	3'-6"	5'-0"	5'-6"	9'-6"	N/A	N/A
14"	1'-0"	1'-0"	1'-0"	2'-0"	3'-0"	3'-6"	5'-6"	10'-0"	N/A
16"	1'-0"	1'-0"	1'-0"	1'-0"	1'-6"	2'-0"	4'-0"	6'-6"	10'-6"

Table B	Intermediate or Cantilever Support				TJI 230 Series I-Joists Table R2.1				
I-Joist	Allowable **Square or Rectangular** Hole Size Based on Measurement of Longest Side								
Depth	2"	3"	4"	5"	6½"	7"	8⁷/₈"	11"	13"
9 ½"	2'-6"	3'-0"	4'-6"	6'-6"	7'-6"	N/A	N/A	N/A	N/A
11⁷/₈"	1'-0"	2'-6"	3'-6"	5'-0"	8'-0"	8'-6"	10'-0"	N/A	N/A
14"	1'-0"	1'-0"	2'-6"	4'-0"	6'-0"	7'-6"	10'-6"	13'-0"	N/A
16"	1'-0"	1'-0"	1'-0"	2'-6"	5'-0"	6'-0"	10'-6"	13'-0"	16'-0"
Note:	Minimum distances from the closest edge of the hole to the nearest bearing face.								

N/A means Not Applicable. Consult manufacturer or RDP. Source: TJ-4000 8/2010, pg. 9. TJI - 3

i-Level TJI® I-Joist Hole Tables

General Rules for Holes in i-Level I-Joist Webs: See Charts and Illustrations for More Details.

1) Never cut or notch I-joist flanges!
2) Never cut holes larger than 1½" in cantilever. Never cut holes in cantilever reinforcement.
3) Holes may be located anywhere vertically in the web. Leave ≥ ⅛" of web closest to flange.
4) Minimum distances are from the closest edge of the hole to the nearest bearing face.
5) For simple span uniformly loaded I-joists (minimum length of 5'-0"), one maximum size round hole can be placed in the center of the joist span provided no other holes are cut.
6) All distances are based on uniform loading conditions. For all other cases, contact i-Level.
7) Never cut holes in the 6"x6" and 6"X6"X6" shaded areas at bearing surfaces.

Table A	End Support				TJI 360 Series I-Joists Table C1.2.1				
I-Joist	Allowable **Round** Hole Size								
Depth	2"	3"	4"	5"	6½"	7"	8⁷/₈"	11"	13"
9 ½"	N/A	N/A	N/A	N/A	N/A	N/A	N/A	N/A	N/A
11⁷/₈"	1'-0"	1'-0"	1'-6"	2'-6"	4'-6"	5'-0"	7'-0"	N/A	N/A
14"	1'-0"	1'-0"	1'-0"	1'-0"	2'-6"	3'-0"	5'-6"	8'-0"	N/A
16"	1'-0"	1'-0"	1'-0"	1'-0"	1'-0"	1'-0"	3'-0"	6'-0"	9'-0"

Table A	End Support				TJI 360 Series I-Joists Table R1.2.1				
I-Joist	Allowable **Square or Rectangular** Hole Size Based on Measurement of Longest Side								
Depth	2"	3"	4"	5"	6½"	7"	8⁷/₈"	11"	13"
9 ½"	N/A	N/A	N/A	N/A	N/A	N/A	N/A	N/A	N/A
11⁷/₈"	1'-0"	1'-0"	2"-6"	4'-0"	6'-6"	6'-6"	7'-6"	N/A	N/A
14"	1'-0"	1'-0"	1'-0"	2"-6"	5'-6"	6'-6"	8'-0"	9'-6"	N/A
16"	1'-0"	1'-0"	1'-0"	1'-0"	4'-0"	5'-0"	9'-0"	10'-0"	11'-6"

Table B	Intermediate or Cantilever Support				TJI 360 Series I-Joists Table C2.2.1				
I-Joist	Allowable **Round** Hole Size								
Depth	2"	3"	4"	5"	6½"	7"	8⁷/₈"	11"	13"
9 ½"	N/A	N/A	N/A	N/A	N/A	N/A	N/A	N/A	N/A
11⁷/₈"	2'-0"	3"-0"	4'-0"	5'-6"	7'-0"	7'-6"	11'-0"	N/A	N/A
14"	1'-0"	1'-0"	2'-0"	3'-6"	5'-6"	6'-0"	8'-6"	12'-6"	N/A
16"	1'-0"	1'-0"	1'-0"	1'-0"	3'-0"	4'-0"	6'-6"	10'-0"	13'-6"

Table B	Intermediate or Cantilever Support				TJI 360 Series I-Joists Table R2.2.1				
I-Joist	Allowable **Square or Rectangular** Hole Size Based on Measurement of Longest Side								
Depth	2"	3"	4"	5"	6½"	7"	8⁷/₈"	11"	13"
9 ½"	N/A	N/A	N/A	N/A	N/A	N/A	N/A	N/A	N/A
11⁷/₈"	2'-0"	3'-6"	5'-0"	7'-0"	9'-6"	9'-6"	11'-0"	N/A	N/A
14"	1'-0"	2'-0"	4'-0"	5'-6"	9'-0"	10'-0"	12'-0"	14'-0"	N/A
16"	1'-0"	1'-0"	2'-0"	4'-0"	7'-6"	8'-6"	13'-0"	14'-6"	17'-0"
Note:	Minimum distances from the closest edge of the hole to the nearest bearing face.								
N/A means Not Allowed or Not Applicable. Source: TJ-4000 8/2010, pg. 9. TJI - 4									

iLevel Trus Joist TJI® I-Joist Basics

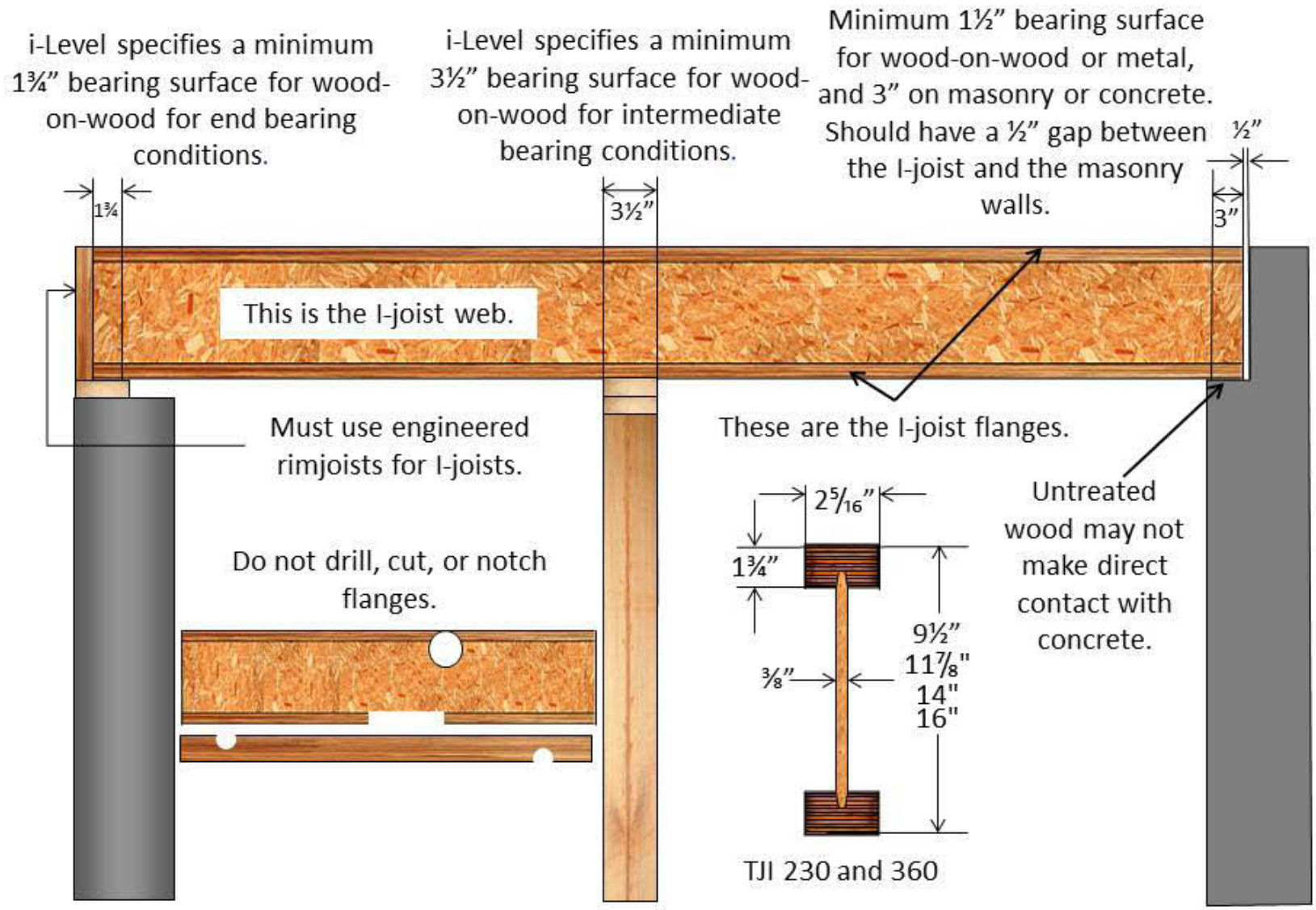

Source: TJ-9000, pp. 3,6

iLevel Trus Joist TJI® Hole Charts

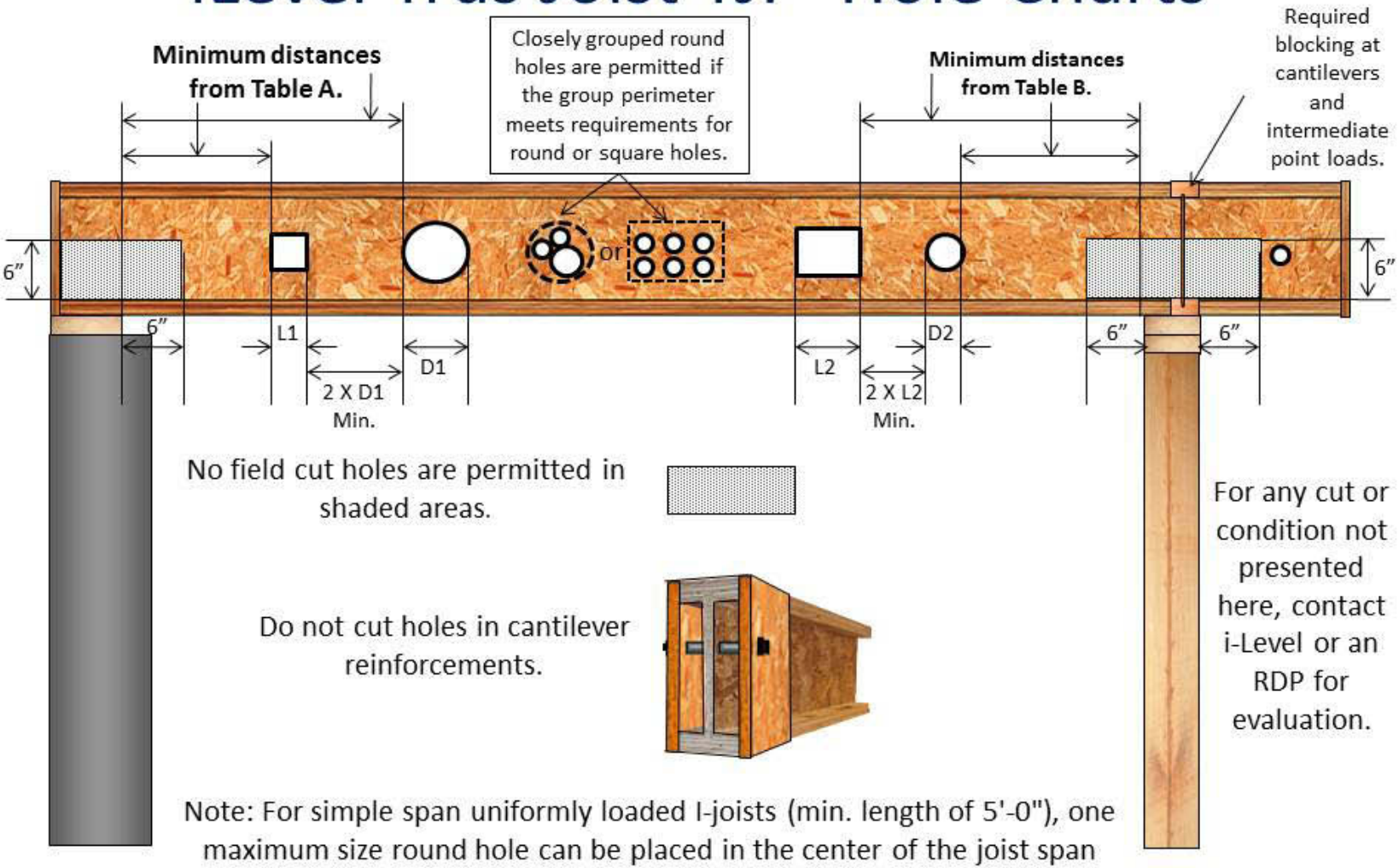

Note: For simple span uniformly loaded I-joists (min. length of 5'-0"), one maximum size round hole can be placed in the center of the joist span provided no other holes are cut.

Source: TJ-9000, p. 9

iLevel Trus Joist TJI® Fasteners at Bearing Areas and Rim Joists

One 8d (0.113 X 2½") nail into each flange at angle ≥ 1½" from end.

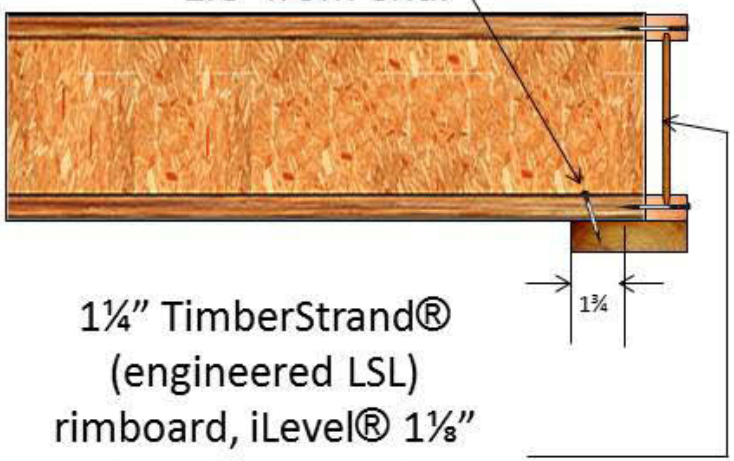

1¼" TimberStrand® (engineered LSL) rimboard, iLevel® 1⅛" rim board, or TJI 110 rim joist, One 10d (0.131" X 3") nail into each flange

For TJI 230 and 360 rim joist, One 16d (0.135 X 3½") nail into each flange.

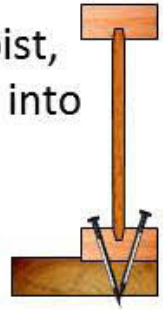

One 8d (0.113 X 2½") nail into each flange at angle ≥ 1½" from end.

1¼" TimberStrand® (engineered LSL) rimboard, iLevel® 1⅛" rim board.

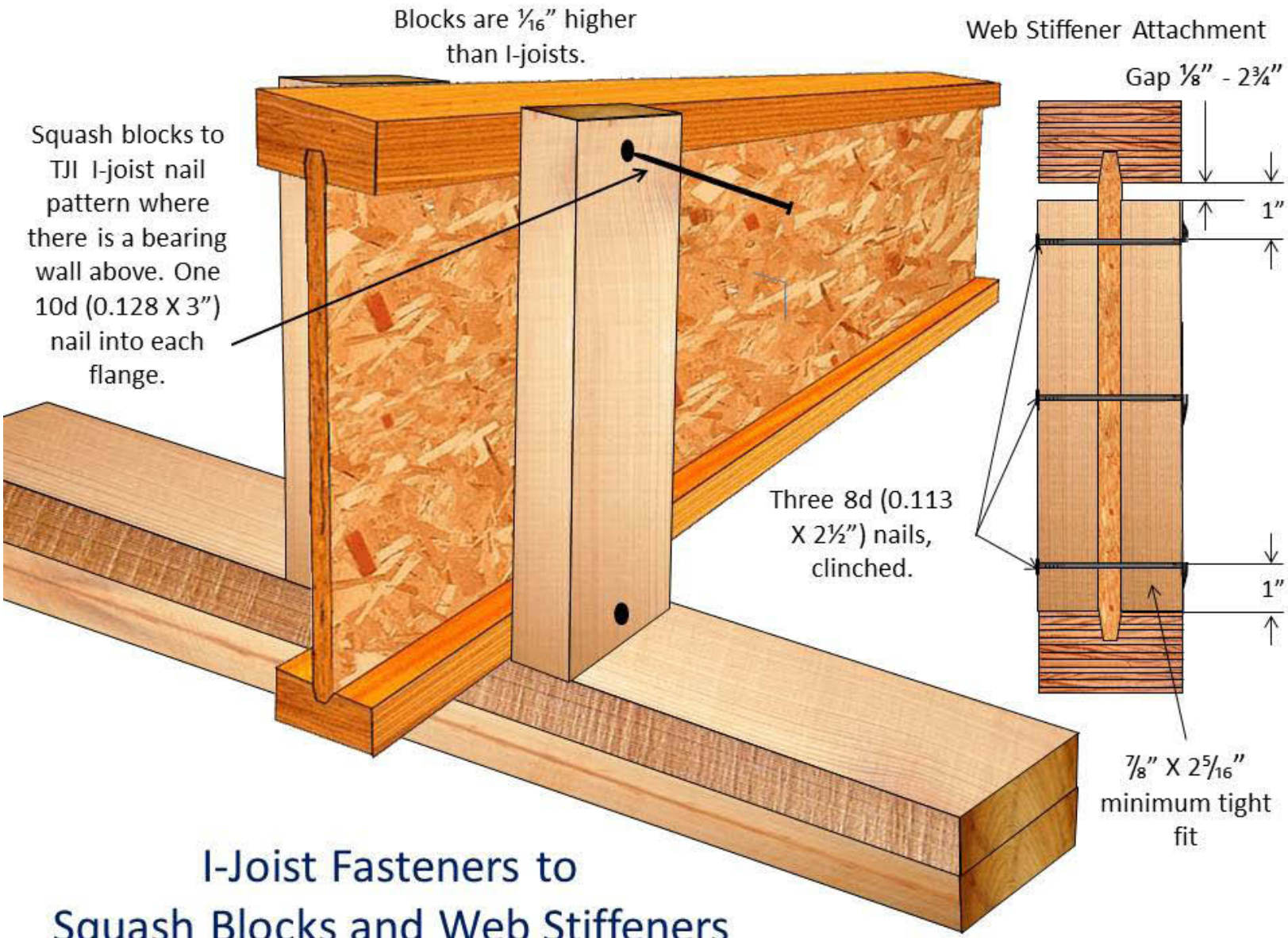

I-Joist Fasteners to Squash Blocks and Web Stiffeners

iLevel Trus Joist TJI® Block Sizes

	Filler and Backer Block Sizes	
	TJI 230 and 360 Series	
	9 ½" and 11⅞"	14" and 16"
Filler Block	2 X 6 + ½" sheathing	2 X 8 + ½" sheathing
Cantilever Filler	2 X 6 + ½" sheathing, 4'-0" long	2 X 10 + ½" sheathing, 6'-0" long
Backer Block	⅞" or 1" net	

Selected I-joist Hanger Models: iLevel TJI I-Joist Series							
Single Joist Hangers: Simpson Strong-Tie (SST)							
Joist Series	Joist Depth	Face Mount	Nailing		Top Mount	Nailing	
			Header	Joist		Header	Joist
TJI 230	9½"	IUS2.37/9.5	10d	N/A	ITS2.37/9.5	10d	N/A
	11⅞"	IUS2.37/11.88	10d	N/A	ITS2.37/11.88	10d	N/A
	14"	IUS2.37/14	10d	N/A	ITS2.37/14	10d	N/A
	16"	IUS2.37/16	10d	N/A	MIT3516	10d	10d X 1½"
TJI 360	9½"	N/A	10d	N/A	N/A	10d	N/a
	11⅞"	IUS2.37/11.88	10d	N/A	ITS2.37/11.88	10d	N/A
	14"	IUS2.37/14	10d	N/A	ITS2.37/14	10d	N/A
	16"	IUS2.37/16	10d	N/A	MIT3516	10d	10d X 1½"

Selected I-joist Hanger Models: iLevel TJI I-Joist Series							
Double Joist Hangers: Simpson Strong-Tie (SST)							
Joist Series	Joist Depth	Face Mount	Nailing		Top Mount	Nailing	
			Header	Joist		Header	Joist
TJI 230	9½"	MIU4.75/9	16d	10d X 1½"	MIT359.5-2	16d	10d X 1½"
	11⅞"	MIU4.7/11	16d	10d X 1½"	MIT3511.88-2	16d	10d X 1½"
	14"	MIU4.75/14	16d	10d X 1½"	MIT3514-2	16d	10d X 1½"
	16"	MIU4.75/16	16d	10d X 1½"	LBV4.75/16	16d	10d X 1½"
TJI 360	9½"	N/A	16d	10d X 1½"	N/A	16d	10d X 1½"
	11⅞"	MIU4.7/11	16d	10d X 1½"	MIT3511.88-2	16d	10d X 1½"
	14"	MIU4.75/14	16d	10d X 1½"	MIT3514-2	16d	10d X 1½"
	16"	MIU4.75/16	16d	10d X 1½"	LBV4.75/16	16d	10d X 1½"
Bold Italic Hangers Need Web Stiffeners							
Leave 1/16" clearance (⅛" maximum) between end of the supported joist and header or hanger.							
Use sloped seat connectors and beveled web stiffeners when joist slope exceeds ¼" per foot.							
Minimum support width for single-and double-joist top mount hangers is 3" (1½" for ITT hangers).							
Minimum support width for face mount hangers with 10d and 16d nails is 1½" and 1¾" respectively.							
Fill all round, dimple, and positive-angle nail holes.							
16d nails = 0.162" dia. X 3½" long. 10d nails = 0.148" dia. X 3" long. 10d X 1½" nails = 0.148" dia. X 1½" long.							
Support material must be iLevel® engineered lumber, Douglas fir, or Southern pine species.							
iLevel Trus Joist® TJI® Joist Specifier's Guide TJ-4000 August 2010.							

Selected I-joist Hanger Models: iLevel TJI I-Joist Series							
Single Joist Hangers: United Steel Products (USP)							
Joist Series	Joist Depth	Face Mount	Nailing		Top Mount	Nailing	
			Header	Joist		Header	Joist
TJI 230	9½"	THF23925	10d	10d X 1½"	TFL2395	10d	10d X 1½"
	11⅞"	THF23118	10d	10d X 1½"	TFL23118	10d	10d X 1½"
	14"	THF23140	10d	10d X 1½"	TFL2314	10d	10d X 1½"
	16"	THF23160	10d	10d X 1½"	TFL2316	10d	10d X 1½"
TJI 360	9½"	N/A	10d	10d X 1½"	N/A	10d	10d X 1½"
	11⅞"	THF23118	10d	10d X 1½"	TFL23118	10d	10d X 1½"
	14"	THF23140	10d	10d X 1½"	TFL2314	10d	10d X 1½"
	16"	THF23160	10d	10d X 1½"	TFL2316	10d	10d X 1½"

Selected I-joist Hanger Models: iLevel TJI I-Joist Series							
Double Joist Hangers: United Steel Products (USP)							
Joist Series	Joist Depth	Face Mount	Nailing		Top Mount	Nailing	
			Header	Joist		Header	Joist
TJI 230	9½"	THF23925-2	16d	10d	THO23950-2	16d	10d
	11⅞"	THF23118-2	16d	10d	THO23118-2	16d	10d
	14"	THF23140-2	16d	10d	THO23140-2	16d	10d
	16"	THF23160-2	16d	10d	THO23160-2	16d	10d
TJI 360	9½"	N/A	16d	10d	N/A	16d	10d
	11⅞"	THF23118-2	16d	10d	THO23118-2	16d	10d
	14"	THF23140-2	16d	10d	THO23140-2	16d	10d
	16"	THF23160-2	16d	10d	THO23160-2	16d	10d
Bold Italic Hangers Need Web Stiffeners							
Leave 1/16" clearance (1/8" maximum) between end of the supported joist and header or hanger.							
Use sloped seat connectors and beveled web stiffeners when joist slope exceeds ¼" per foot.							
Minimum support width for single-and double-joist top mount hangers is 3" (1½" for ITT hangers).							
Minimum support width for face mount hangers with 10d and 16d nails is 1½" and 1¾" respectively.							
Fill all round, dimple, and positive-angle nail holes.							
16d nails = 0.162" dia. X 3½" long. 10d nails = 0.148" dia. X 3" long. 10d X 1½" nails = 0.148" dia. X 1½" long.							
Support material must be iLevel® engineered lumber, Douglas fir, or Southern pine species.							
iLevel Trus Joist® TJI® Joist Specifier's Guide TJ-4000 August 2010.							

Selected I-joist Hanger Models: iLevel TJI I-Joist Series				
Variable Slope Seat Connectors: Simpson Strong-Tie (SST)				
Joist Series	Joist Depth	Seat Model #	Nailing	
			Header	Joist
TJI 230	9½"	VPA35	10d	10d X 1½"
	11⅞"		10d	10d X 1½"
	14"		10d	10d X 1½"
	16"		10d	10d X 1½"
TJI 360	9½"	VPA35	10d	10d X 1½"
	11⅞"		10d	10d X 1½"
	14"		10d	10d X 1½"
	16"		10d	10d X 1½"

Selected I-joist Hanger Models: iLevel TJI I-Joist Series				
Face Mount Skewed 45° Joist Hanger: Simpson Strong-Tie (SST)				
Joist Series	Joist Depth	Model #	Nailing	
			Header	Joist
TJI 230	9½"	***SUR/L2.37/9***	10d	10d X 1½"
	11⅞"	***SUR/L2.37/11***	10d	10d X 1½"
	14"	***SUR/L2.37/14***	10d	10d X 1½"
	16"	***SUR/L2.37/14***	10d	10d X 1½"
TJI 360	9½"	***SUR/L2.37/9***	10d	10d X 1½"
	11⅞"	***SUR/L2.37/11***	10d	10d X 1½"
	14"	***SUR/L2.37/14***	10d	10d X 1½"
	16"	***SUR/L2.37/14***	10d	10d X 1½"

Selected I-joist Hanger Models: iLevel TJI I-Joist Series				
Variable Slope Joist Hanger: Simpson Strong-Tie (SST)				
Joist Series	Joist Depth	Face Mount Model Only	Nailing	
			Header	Joist
TJI 230	9½"	LSSU135	10d	10d X 1½"
	11⅞"		10d	10d X 1½"
	14"		10d	10d X 1½"
	16"		10d	10d X 1½"
TJI 360	9½"	LSSU135	10d	10d X 1½"
	11⅞"		10d	10d X 1½"
	14"		10d	10d X 1½"
	16"		10d	10d X 1½"

Bold Italic Hangers Need Web Stiffeners

Leave 1/16" clearance (⅛" maximum) between end of the supported joist and header or hanger.

Use sloped seat connectors and beveled web stiffeners when joist slope exceeds ¼" per foot.

Minimum support width for single-and double-joist top mount hangers is 3" (1½" for ITT hangers).

Minimum support width for face mount hangers with 10d and 16d nails is 1½" and 1¾" respectively.

Fill all round, dimple, and positive-angle nail holes.

16d nails = 0.162" dia. X 3½" long. 10d nails = 0.148" dia. X 3" long. 10d X 1½" nails = 0.148" dia. X 1½" long.

Support material must be iLevel® engineered lumber, Douglas fir, or Southern pine species.

iLevel Trus Joist® TJI® Joist Specifier's Guide TJ-4000 August 2010.

Selected I-joist Hanger Models: iLevel TJI I-Joist Series				
Variable Slope Seat Connectors: United Steel Products (USP)				
Joist Series	Joist Depth	Seat Model #	Nailing	
			Header	Joist
TJI 230	9½"	TMP23	10d	10d X 1½"
	11⅞"		10d	10d X 1½"
	14"	***TMPH23***	10d	10d X 1½"
	16"		10d	10d X 1½"
TJI 360	9½"	TMP23	10d	10d X 1½"
	11⅞"		10d	10d X 1½"
	14"	***TMPH23***	10d	10d X 1½"
	16"		10d	10d X 1½"

Selected I-joist Hanger Models: iLevel TJI I-Joist Series				
Face Mount Skewed 45° Joist Hanger: United Steel Products (USP)				
Joist Series	Joist Depth	Model #	Nailing	
			Header	Joist
TJI 230	9½"	***SKH2320L/R***	10d	10d X 1½"
	11⅞"	***SKH2320L/R***	10d	10d X 1½"
	14"	***SKH2324L/R***	10d	10d X 1½"
	16"	***SKH2324L/R***	10d	10d X 1½"
TJI 360	9½"	N/A	10d	10d X 1½"
	11⅞"	***SKH2320L/R***	10d	10d X 1½"
	14"	***SKH2324L/R***	10d	10d X 1½"
	16"	***SKH2324L/R***	10d	10d X 1½"

Selected I-joist Hanger Models: iLevel TJI I-Joist Series				
Variable Slope Joist Hanger: United Steel Products (USP)				
Joist Series	Joist Depth	Face Mount Model Only	Nailing	
			Header	Joist
TJI 230	9½"	***LSSH23***	10d	10d X 1½"
	11⅞"		10d	10d X 1½"
	14"		10d	10d X 1½"
	16"		10d	10d X 1½"
TJI 360	9½"	***LSSH23***	10d	10d X 1½"
	11⅞"		10d	10d X 1½"
	14"		10d	10d X 1½"
	16"		10d	10d X 1½"

Bold Italic Hangers Need Web Stiffeners

Leave 1/16" clearance (⅛" maximum) between end of the supported joist and header or hanger.

Use sloped seat connectors and beveled web stiffeners when joist slope exceeds ¼" per foot.

Minimum support width for single-and double-joist top mount hangers is 3" (1½" for ITT hangers).

Minimum support width for face mount hangers with 10d and 16d nails is 1½" and 1¾" respectively.

Fill all round, dimple, and positive-angle nail holes.

16d nails = 0.162" dia. X 3½" long. 10d nails = 0.148" dia. X 3" long. 10d X 1½" nails = 0.148" dia. X 1½" long.

Support material must be iLevel® engineered lumber, Douglas fir, or Southern pine species.

iLevel Trus Joist® TJI® Joist Specifier's Guide TJ-4000 August 2010.

i-Level TJI® I-Joist Span Tables

Spans are measured from the inside faces of bearing supports.

Span Table L/480	TJI 230 Series I-Joist							
	40 PSF Live Load / 10 PSF Dead Load				40 PSF Live Load / 20 PSF Dead load			
	12" o.c.	16" o.c.	19.2" o.c.	24" o.c.	12" o.c.	16" o.c.	19.2" o.c.	24" o.c.
9 ½"	18'-3"	16'-8"	15'-9"	14'-8"	18'-3"	16'-8"	15'-9"	14'-8"
11⁷/₈"	21'-8"	19'-10"	18'-8"	17'-5"	21'-8"	19'-10"	18'-7"	16'-7"*
14"	24'-8"	22'-6"	21'-2"	19'-9"*	24'-8"	22'-2"	20'-3"*	17'-6"*
16"	27'-3"	24'-10"	23'-6"	21'-1"*	***27'-3"***	23'-9"	21'-8"	17'-6"

L = length in inches. o.c. = on center. PSF = pounds per square foot. N/A = not applicable

Long-term deflection under dead load, which includes the effect of creep has not been considered.
Bold Italic spans reflect initial load deflection exceeding 0.33".

Span Table L/360 (Code Min)	TJI 230 Series I-Joist							
	40 PSF Live Load / 10 PSF Dead Load				40 PSF Live Load / 20 PSF Dead load			
	12" o.c.	16" o.c.	19.2" o.c.	24" o.c.	12" o.c.	16" o.c.	19.2" o.c.	24" o.c.
9 ½"	20'-3"	18'-6"	17'-5"	16'-2"	***20'-3"***	18'-1"	16'-6"	14'-9"
11⁷/₈"	24'-0"	21'-11"	20'-5"	18'-3"	***23'-7"***	20'-5"	18'-7"	16'-7"*
14"	27'-3"	24'-4"	22'-2"	19'-10"*	***25'-8"***	22'-2"	20'-3"*	17'-6"*
16"	30'-1"	26'-0"	23'-9"	21'-1"*	***27'-5"***	23'-9"	21'-8"*	17'-6"*

*** = Web stiffeners required at intermediate supports of continuous span joists when the intermediate bearing length is less than 5¼" and the span on either side of the intermediate bearing is greater than the spans in Table A below.**

Table A	40 PSF Live Load / 10 PSF Dead Load				40 PSF Live Load / 20 PSF Dead load			
	12" o.c.	16" o.c.	19.2" o.c.	24" o.c.	12" o.c.	16" o.c.	19.2" o.c.	24" o.c.
TJI 230	N/A	N/A	N/A	19'-2"	N/A	N/A	19'-11"	15'-11"
TJI 360	N/A	N/A	24'-5"	19'-6"	N/A	24'-5"	20'-4"	16'-3"

Tables are based upon uniform loads, the more restrictive of simple or continuous span, clear distance between supports (1¾" minimum end bearing). Deflection assumes single layer of span-rated glue-nailed floor panels 24" o.c. only.

Spans shall be reduced by 6" when floor panels are nailed only.

i-Level TJI® I-Joist Span Tables

Spans are measured from the inside faces of bearing supports.

Span Table L/480	TJI 360 Series I-Joist							
	40 PSF Live Load / 10 PSF Dead Load				40 PSF Live Load / 20 PSF Dead load			
	12" o.c.	16" o.c.	19.2" o.c.	24" o.c.	12" o.c.	16" o.c.	19.2" o.c.	24" o.c.
9 ½"	N/A	N/A	N/A	N/A	N/A	N/A	N/A	N/A
11⁷/₈"	22'-11"	20'-11"	19'-8"	18'-4"	22'-11"	20'-11"	19'-8"	17'-10"
14"	26'-0"	23'-8"	22'-4"	20'-9"*	26'-0"	23'-8"	22'-4"	17'-10"
16"	28'-9"	26'-3"	24'-8"*	21'-5"*	***28'-9"***	26'-3"*	22'-4"*	17'-10"*

L = length in inches. o.c. = on center. PSF = pounds per square foot. N/A = not applicable

Long-term deflection under dead load, which includes the effect of creep has not been considered.
Bold Italic spans reflect initial load deflection exceeding 0.33".

Span Table L/360 (Code Min)	TJI 360 Series I-Joist							
	40 PSF Live Load / 10 PSF Dead Load				40 PSF Live Load / 20 PSF Dead load			
	12" o.c.	16" o.c.	19.2" o.c.	24" o.c.	12" o.c.	16" o.c.	19.2" o.c.	24" o.c.
9 ½"	N/A	N/A	N/A	N/A	N/A	N/A	N/A	N/A
11⁷/₈"	25'-4"	23'-2"	21'-10"	20'-4"*	***25'-4"***	***23'-2"***	***21'-10"****	17'-10"*
14"	28'-9"	26'-3"	24'-9"*	21'-5"*	***28'-9"***	26'-3"*	22'-4"*	17'-10"*
16"	31'-10"	29'-0"	26'-10"*	21'-5"*	***31'-10"***	***26'-10"****	22'-4"*	17'-10"*

*** = Web stiffeners required at intermediate supports of continuous span joists when the intermediate bearing length is less than 5¼" and the span on either side of the intermediate bearing is greater than the spans in Table A below.**

Table A	40 PSF Live Load / 10 PSF Dead Load				40 PSF Live Load / 20 PSF Dead load			
	12" o.c.	16" o.c.	19.2" o.c.	24" o.c.	12" o.c.	16" o.c.	19.2" o.c.	24" o.c.
TJI 230	N/A	N/A	N/A	19'-2"	N/A	N/A	19'-11"	15'-11"
TJI 360	N/A	N/A	24'-5"	19'-6"	N/A	24'-5"	20'-4"	16'-3"

Tables are based upon uniform loads, the more restrictive of simple or continuous span, clear distance between supports (1¾" minimum end bearing). Deflection assumes single layer of span-rated glue-nailed floor panels 24" o.c. only.

Spans shall be reduced by 6" when floor panels are nailed only.

iLevel TJI® I-Joist Filler and Blocking Sizes		
TJI®	**230 and 360 Models**	
Depth	**9½" - 11⅞"**	**14" - 16"**
Filler Block	2 X 6 + ⅜" sheathing	2 X 8 + ½" sheathing
Cantilever Filler	2 X 6 + ⅜" sheathing 4'-0" long	2 X 10 + ½" sheathing 6'-0" long
Backer Block	⅞" or 1" net	

iLevel Trus Joist® TJI® Specifier's Guide TJ-4000. August 2010.

TJI I-Joist Rafter Spans			Design Live Load (LL) and Dead Load (DL) in PSF			
			Non-Snow (125%)		Snow Area (115%)	
On Center (o.c.) spacing	Depth	TJI Model	20 LL + 15 DL		25 LL + 15 DL	
			Low Slope	High Slope	Low Slope	High Slope
16"	9½"	230	21'-11"	19'-6"	20'-11"	18'-9"
	11⅞"	230	26'-1"	23'-3"	24'-11"	22'-4"
		360	27'-9"	24'-9"	26'-7"	23'-10"
	14"	230	29'-8"	26'-6"	28'-5"	25'-5"
		360	31'-5"	28'-2"	30'-2"	27'-1"
	16"	230	32'-10"	29'-4"	30'-7"	28'-2"
		360	34'-11"	31'-2"	33'-5"	30'-0"
			Low Slope	High Slope	Low Slope	High Slope
19.2"	9½"	230	20'-7"	18'-4"	19'-8"	17'-7"
	11⅞"	230	24'-6"	21'-10"	23'-5"	21'-0"
		360	26'-1"	23'-3"	24'-11"	22'-4"
	14"	230	27'-10"	24'-10"	26'-1"	23'-11"
		360	29'-7"	26'-5"	28'-4"	25'-5"
	16"	230	30'-11"	27'-7"	27'-11"	26'-6"
		360	32'-10"	29'-3"	31'-5"	28'-2"
			Low Slope	High Slope	Low Slope	High Slope
24"	9½"	230	19'-0"	17'-0"	18'-2"	16'-4"
	11⅞"	230	22'-8"	20'-3"	21'-5"	19'-5"
		360	24'-1"	21'-6"	23'-1"	20'-8"
	14"	360	25'-9"	23'-0"	23'-4"	22'-2"
		360	27'-5"	24'-6"	26'-3"	23'-6"
	16"	230	27'-9"	25'-6"	24'-11"	23'-8"
		360	30'-4"	27'-1"	28'-2"	26'-1"

Source: TJI Joist Specifier's Guide. TJ-4000. August 2010.

Low slope = ≤ 6:12. High slope = 6:12 - 12:12. PSF = pounds per square foot.

Table is based on uniform loads. Use the more restrictive of simple or continuous span.

Total load limits joist deflection to L/180. Live load is based on joist deflection of L/240.

A support beam or wall at the high end is required. Ridge boards are not allowed.

Span values assume no web stiffeners at intermediate bearings.

1.55E iLevel TimberStrand® LSL Headers and Beams

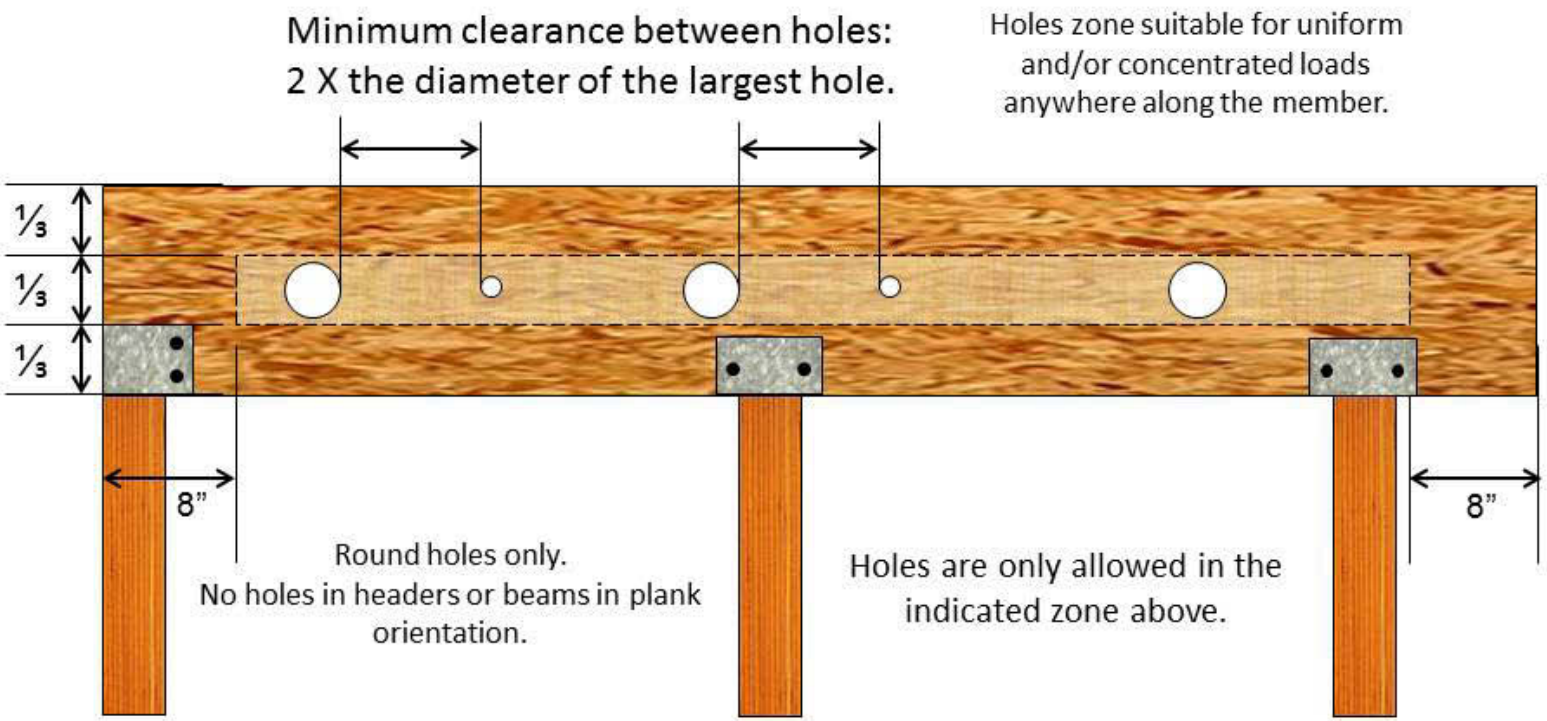

1.55E TimberStrand® LSL	
Header or Beam Depth	Maximum Round Hole Size
9¼" - 9½"	3"
11¼" - 11⅞"	3⅝"
14 - 16"	4⅝"

Source: iLevel Beam, Header, and Column Specifier's Guide TJ-9000. June 2010.

1.3E iLevel TimberStrand® LSL Headers and Beams

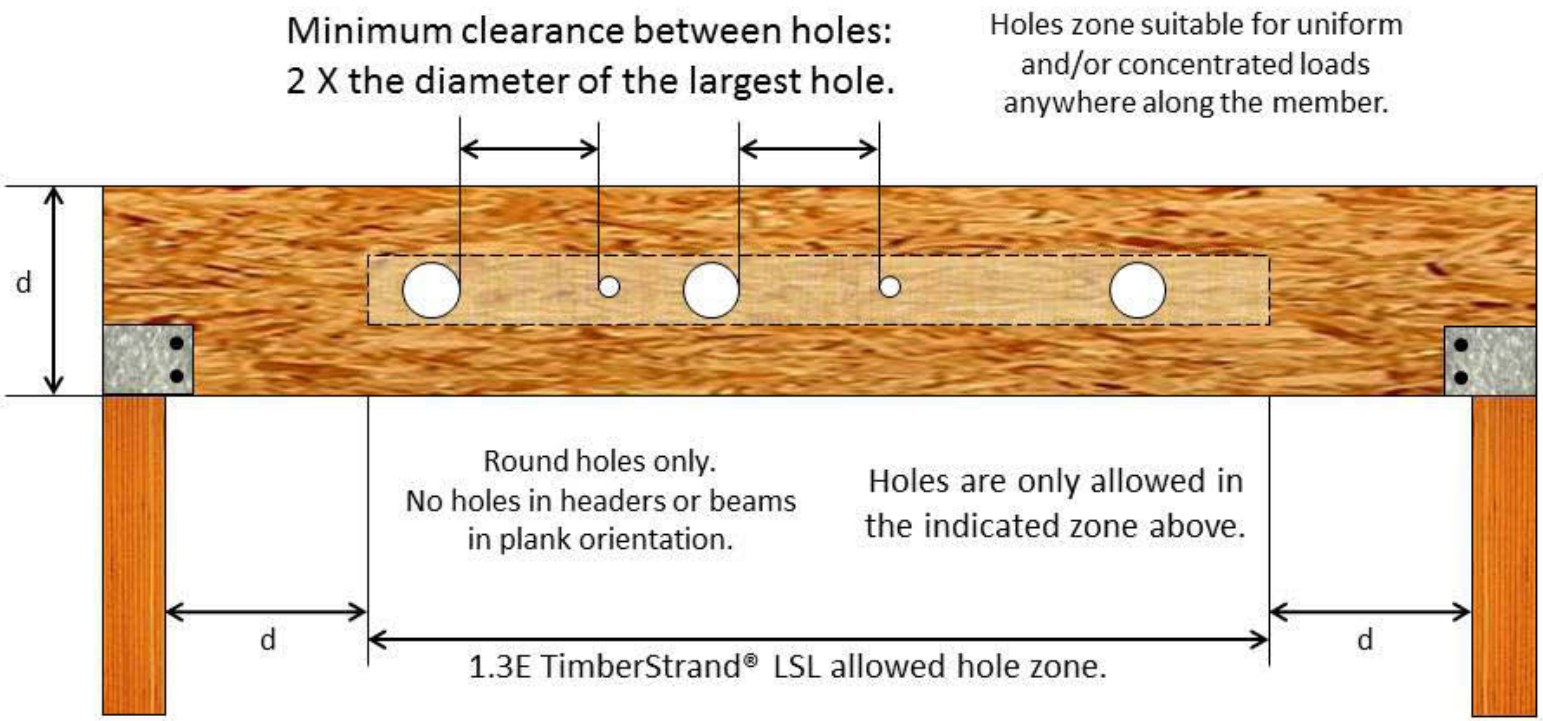

Source: iLevel Beam, Header, and Column Specifier's Guide TJ-9000. June 2010.

iLevel Microllam® LVL and Parallam® PSL Headers and Beams

1/13/2011

Minimum clearance between holes:
2 X the diameter of the largest hole.

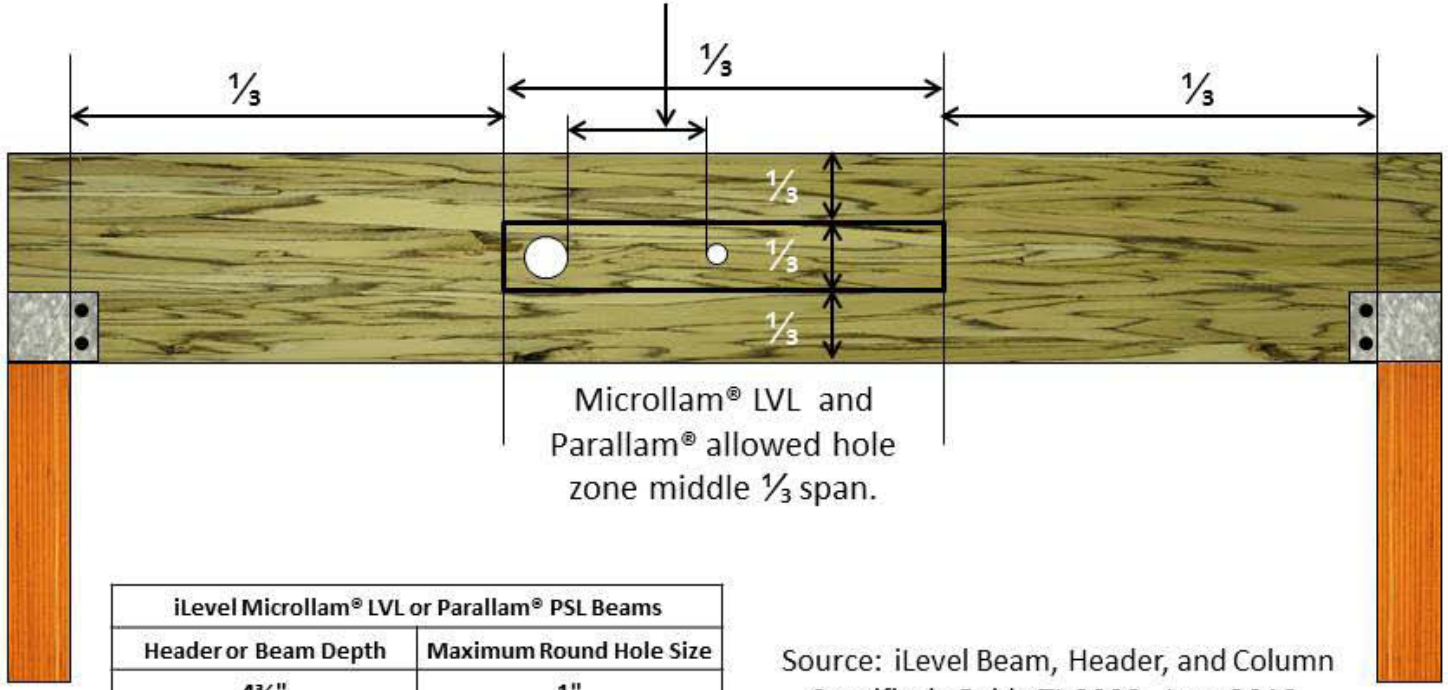

iLevel Microllam® LVL or Parallam® PSL Beams	
Header or Beam Depth	Maximum Round Hole Size
4⅜"	1"
5½"	1¾"
7¼" - 20"	2"

Source: iLevel Beam, Header, and Column Specifier's Guide TJ-9000. June 2010.

Multiple-Member Connections for iLevel Side-Loaded Beams												
Multiple Ply Widths and Types	3½" Wide		5¼" Wide				7" Wide					
							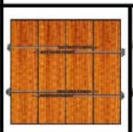		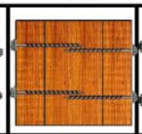		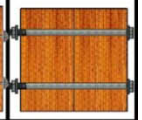	
	2 X 1¾"		3 X 1¾"		1¾ + 3½		4 X 1¾"		(3 X 1¾") +3½"		2 X 3½"	
Fasteners	Rows	O.C. Space	Rows	O.C. Space	Rows	O.C. Space	Rows	O.C. Space	Rows	O.C. Space	Rows	O.C. Space
10d nails 0.128" X 3"	2	12"	***2***	***12"***	2	12"	2	12"	***2***	***12"***	2	12"
	3	12"	***3***	***12"***	3	12"	3	12"	***3***	***12"***	3	12"
½" Through Bolts	2	24"	2	24"	2	24"	2	24"	2	24"	2	24"
	2	19.2"	2	19.2"	2	19.2"	2	19.2"	2	19.2"	2	19.2"
	2	16"	2	16"	2	16"	2	16"	2	16"	2	16"
SDS ¼" X 3½"	2	24"	***2***	***24"***	2	24"	2	24"	***2***	***24"***	2	24"
	2	19.2"	***2***	***19.2"***	2	19.2"	2	19.2"	***2***	***19.2"***	2	19.2"
	2	16"	***2***	***16"***	2	16"	2	16"	***2***	***16"***	2	16"
SDS ¼" X 6"	2	24"	2	24"	2	24"	***2***	***24"***	***2***	***24"***	***2***	***24"***
	2	19.2"	2	19.2"	2	19.2"	***2***	***19.2"***	***2***	***19.2"***	***2***	***19.2"***
	2	16"	2	16"	2	16"	***2***	***16"***	***2***	***16"***	***2***	***16"***
USP WS35	2	24"	***2***	***24"***	2	24"	2	24"	***2***	***24"***	2	24"
	2	19.2"	***2***	***19.2"***	2	19.2"	2	19.2"	***2***	***19.2"***	2	19.2"
	2	16"	***2***	***16"***	2	16"	2	16"	***2***	***16"***	2	16"
USP WS6	2	24"	2	24"	2	24"	2	24"	***2***	***24"***	***2***	***24"***
	2	19.2"	2	19.2"	2	19.2"	2	19.2"	***2***	***19.2"***	***2***	***19.2"***
	2	16"	2	16"	2	16"	2	16"	***2***	***16"***	***2***	***16"***
3⅜" TrussLok	2	24"	***2***	***24"***	2	24"	2	24"	***2***	***24"***	2	24"
	2	19.2"	***2***	***19.2"***	2	19.2"	2	19.2"	***2***	***19.2"***	2	19.2"
	2	16"	***2***	***16"***	2	16"	2	16"	***2***	***16"***	2	16"
5" TrussLok	2	24"	2	24"	2	24"	***2***	***24"***	***2***	***24"***	***2***	***24"***
	2	19.2"	2	19.2"	2	19.2"	***2***	***19.2"***	***2***	***19.2"***	***2***	***19.2"***
	2	16"	2	16"	2	16"	***2***	***16"***	***2***	***16"***	***2***	***16"***
6¾" TrussLok	2	24"	2	24"	2	24"	2	24"	2	24"	2	24"
	2	19.2"	2	19.2"	2	19.2"	2	19.2"	2	19.2"	2	19.2"
	2	16"	2	16"	2	16"	2	16"	2	16"	2	16"
SDW22 3⅜"	2	24"	***2***	***24"***	2	24"	2	24"	***2***	***24"***	2	24"
	2	19.2"	***2***	***19.2"***	2	19.2"	2	19.2"	***2***	***19.2"***	2	19.2"
	2	16"	***2***	***16"***	2	16"	2	16"	***2***	***16"***	2	16"
SDW22 5"	2	24"	2	24"	2	24"	***2***	***24"***	***2***	***24"***	2	24"
	2	19.2"	2	19.2"	2	19.2"	***2***	***19.2"***	***2***	***19.2"***	2	19.2"
	2	16"	2	16"	2	16"	***2***	***16"***	***2***	***16"***	2	16"
SDW22 6¾"	2	24"	2	24"	2	24"	2	24"	2	24"	2	24"
	2	19.2"	2	19.2"	2	19.2"	2	19.2"	2	19.2"	2	19.2"
	2	16"	2	16"	2	16"	2	16"	2	16"	2	16"

Source: iLevel (2010b). iLevel Beam, Header, and Column Specifier's Guide TJ-9000. June 2010.

Bold Italic cells indicate the connector pattern must be used on both sides.

SDS and SDW structural screws are produced by Simpson Strong-Tie Company, Inc.
WS structural screws are produced by United Steel Products Company (USP)
TrussLok structural screws are produced by FastenMaster - OMG, Inc.
All structural screws must be installed per manufacturer's recommendations.
Specifications for 10d nails are 0.128" (consistent with 10d box nails). 10d common nails = 0.148".
Bolt holes are to be a maximum of 1/16" larger than the bolts. Bolts and nuts require washers.
Minimum end distance for bolts and screws is 6".
7" wide beams should only be side-loaded only when loads are applied to both sides of the members to minimize rotation. See illustration below.

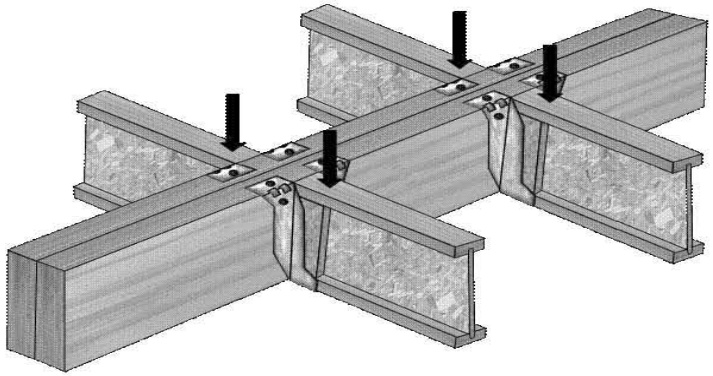

Source: iLevel (2010b). iLevel Beam, Header, and Column Specifier's Guide TJ-9000. June 2010.

iLevel 1.55E TimberStrand® LSL	
Header or Beam Depth	**Maximum Round Hole Size**
9¼" - 9½"	**3"**
11¼" - 11⅞"	**3⅝"**
14 - 16"	**4⅝"**

iLevel Microllam® LVL or Parallam® Beams	
Header or Beam Depth	**Maximum Round Hole Size**
4⅜"	**1"**
5½"	**1¾"**
7¼" - 20"	**2"**

iLevel Timberstrand® LSL, Microlam® LVL, and Parallam® PSL Beams, Headers, and Columns				
Simpson Strong-Tie® Hanger Hardware: Top Mount Hangers				
Supported Member Width	Supported Member Depth	Hanger	Nail Type	
			Header	Joist
1¾"	9¼"	WPU1.81/9.25	16d	10d X 1½"
		LBV1081/9.25	16d	10d X 1½"
	9½"	MIT9.5	16d	10d X 1½"
		LBV1.81/9.5	16d	10d X 1½"
	11¼"	WPU1.81/11.25	16d	10d X 1½"
		LBV1.81/11.25	16d	10d X 1½"
	11⅞"	MIT11.88	16d	10d X 1½"
		BA1.81/11.88	16d	10d X 1½"
	14"	B1.81/14	16d	10d X 1½"
3½": Two plies of 1¾" LVL Or One ply of 3½" LVL	9¼"	HB3.56/9.25	16d	16d
	9½"	HB3.56/9.5	16d	16d
	11¼"	HB3.56/11.25	16d	16d
	11⅞"	HB3.56/11.88	16d	16d
	14"	GLTV3.514	16d	16d
	16"	GLTV3.516	16d	16d
	18"	HGLTV3.518	16d	16d
	20"	HGLTV3.520	16d	16d
5¼": Three plies of 1¾" LVL	9¼"	GLTV5.50/9.25	16d	16d
	9½"	GLTV5.59	16d	16d
	11¼"	GLTV5.50/11.25	16d	16d
	11⅞"	HGLTV5.511	16d	16d
	14"	EGQ5.50-SDS3	SDS ¼" X 3"	SDS ¼" X 3"
	16"	EGQ5.50-SDS3	SDS ¼" X 3"	SDS ¼" X 3"
	18"	EGQ5.50-SDS3	SDS ¼" X 3"	SDS ¼" X 3"
	20"	EGQ5.50-SDS3	SDS ¼" X 3"	SDS ¼" X 3"
7": Four plies of 1¾" LVL Or Two plies of 3½" LVL	11⅞"	EGQ7.25-SDS3	SDS ¼" X 3"	SDS ¼" X 3"
	14"	EGQ7.25-SDS3	SDS ¼" X 3"	SDS ¼" X 3"
	16"	EGQ7.25-SDS3	SDS ¼" X 3"	SDS ¼" X 3"
	18"	EGQ7.25-SDS3	SDS ¼" X 3"	SDS ¼" X 3"
	N/A	N/A	N/A	N/A
	N/A	N/A	N/A	N/A
Source: iLevel (2010b). iLevel Beam, Header, and Column Specifier's Guide TJ-9000. June 2010.				
16d nails = 0.162" dia. X 3½" long. 10d nails = 0.148" dia. X 3" long. 10d X 1½" nails = 0.148" dia. X 1½" long.				

iLevel Timberstrand® LSL, Microlam® LVL, and Parallam® PSL Beams, Headers, and Columns				
Simpson Strong-Tie® Hanger Hardware: Face Mount Hangers				
Supported Member Width	Supported Member Depth	Hanger	Nail Type	
			Header	Joist
1¾"	7¼" - 9½"	HU7	16d	10d X 1½"
	11¼" - 14"	HU11	16d	10d X 1½"
		HUS1.81/10	16d	16d
3½": Two plies of 1¾" LVL Or One ply of 3½" LVL	7¼" - 11¼"	HHUS48	16d	16d
	9½" - 18"	HHUS410	16d	16d
		HGUS410	16d	16d
	14" - 20"	HGUS414	16d	16d
5¼": Three plies of 1¾" LVL	9¼" - 11⅞"	HHUS5.50/10	16d	16d
	11¼" - 14"	HGUS5.50/12	16d	16d
	14" - 20"	HGUS5.50/14	16d	16d
		HGU5.50	SDS ¼" X 2½"	SDS ¼" X 2½"
7": Four plies of 1¾" LVL Or Two plies of 3½" LVL	9¼" - 11⅞"	HGUS7.25/10	16d	16d
	11¼" - 16"	HGUS7.25/12	16d	16d
		HGU7.25	SDS ¼" X 2½"	SDS ¼" X 2½"
	14" - 20"	HGUS7.25/14	16d	16d
		HHGU7.25	SDS ¼" X 2½"	SDS ¼" X 2½"

Source: iLevel (2010b). iLevel Beam, Header, and Column Specifier's Guide TJ-9000. June 2010.

16d nails = 0.162" dia. X 3½" long. 10d nails = 0.148" dia. X 3" long.
10d X 1½" nails = 0.148" dia. X 1½" long.

iLevel Timberstrand® LSL, Microlam® LVL, and Parallam® PSL Beams, Headers, and Columns				
USP Structural Connectors®: Top Mount Hangers				
Supported Member Width	Supported Member Depth	Hanger	Nail Type	
			Header	Joist
1¾"	9¼"	BPH17925	16d	10d X 1½"
		PHXU17925	16d	10d X 1½"
	9½"	BPH1795	16d	10d X 1½"
		PHXU1795	16d	10d X 1½"
	11¼"	BPH17112	16d	10d X 1½"
		PHXU17112	16d	10d X 1½"
	11⅞"	BPH17118	16d	10d X 1½"
		PHXU17118	16d	10d X 1½"
	14"	BPH1714	16d	10d X 1½"
		PHXU1714	16d	10d X 1½"
3½": Two plies of 1¾" LVL Or One ply of 3½" LVL	9¼"	PHXU35925	16d	10d
	9½"	PHXU3595	16d	10d
	11¼"	PHXU35112	16d	10d
	11⅞"	PHXU35118	16d	10d
	14"	HLBH3514	NA16D-RS	16d
	16"	HLBH3516	NA16D-RS	16d
	18"	HLBH3518	NA16D-RS	16d
	20"	PHXU3520	16d	10d
		HLBH3520	NA16D-RS	16d
5¼": Three plies of 1¾" LVL	9¼"	PHXU55925	16d	10d
	9½"	PHXU5595	16d	10d
	11¼"	PHXU55112	16d	10d
	11⅞"	PHXU55118	16d	10d
	14"	HLBH5514	NA16D-RS	16d
	16"	HLBH5516	NA16D-RS	16d
	18"	PHXU5518	16d	10d
		HLBH5518	NA16D-RS	16d
	20"	PHXU5520	16d	10d
		HLBH5520	NA16D-RS	16d
7": Four plies of 1¾" LVL Or Two plies of 3½" LVL	11⅞"	PHXU71118	16d	10d
	14"	HLBH7114	NA16D-RS	16d
	16"	HLBH7116	NA16D-RS	16d
	18"	HLBH7118	NA16D-RS	16d
	N/A	N/A	N/A	N/A
	N/A	N/A	N/A	N/A
Source: iLevel (2010b). iLevel Beam, Header, and Column Specifier's Guide TJ-9000. June 2010.				
16d nails = 0.162" dia. X 3½" long. 10d nails = 0.148" dia. X 3" long. 10d X 1½" nails = 0.148" dia. X 1½" long.				

iLevel Timberstrand® LSL, Microlam® LVL, and Parallam® PSL Beams, Headers, and Columns				
USP Structural Connectors®: Face Mount Hangers				
Supported Member Width	Supported Member Depth	Hanger	Nail Type	
			Header	Joist
1¾"	9¼" - 14"	HD17925	16d	10d X 1½"
		THD179	16d	10d X 1½"
	11¼" - 14"	HD17112	16d	10d X 1½"
	14"	HD1714	16d	10d X 1½"
3½": Two plies of 1¾" LVL Or One ply of 3½" LVL	9¼" - 14"	HD410	16d	10d
		THD410	16d	10d
	11¼" - 18"	HD412	16d	10d
		THD412	16d	10d
		THDH412	16d	16d
	14" - 20"	HD414	16d	10d
		THD414	16d	10d
		THDH414	16d	16d
5¼": Three plies of 1¾" LVL	9¼" - 11⅞"	HD5210	16d	10d
		THD610	16d	10d
		THDH610	16d	16d
	11¼" - 16"	THDH612	16d	16d
	11¼" - 18"	THD612	16d	10d
	14" - 20"	THD614	16d	10d
		THDH614	16d	16d
7": Four plies of 1¾" LVL Or Two plies of 3½" LVL	9¼" - 11⅞"	HD7100	16d	10d
		THDH7210	16d	16d
	11¼" - 16"	HD7120	16d	10d
		THDH7212	16d	16d
	14" - 20"	HD7140	16d	10d
		THDH7214	16d	16d

Source: iLevel (2010b). iLevel Beam, Header, and Column Specifier's Guide TJ-9000. June 2010.

16d nails = 0.162" dia. X 3½" long. 10d nails = 0.148" dia. X 3" long.
10d X 1½" nails = 0.148" dia. X 1½" long.

Appendix J: Jager Details

JSI Brick Ledge Cantilever

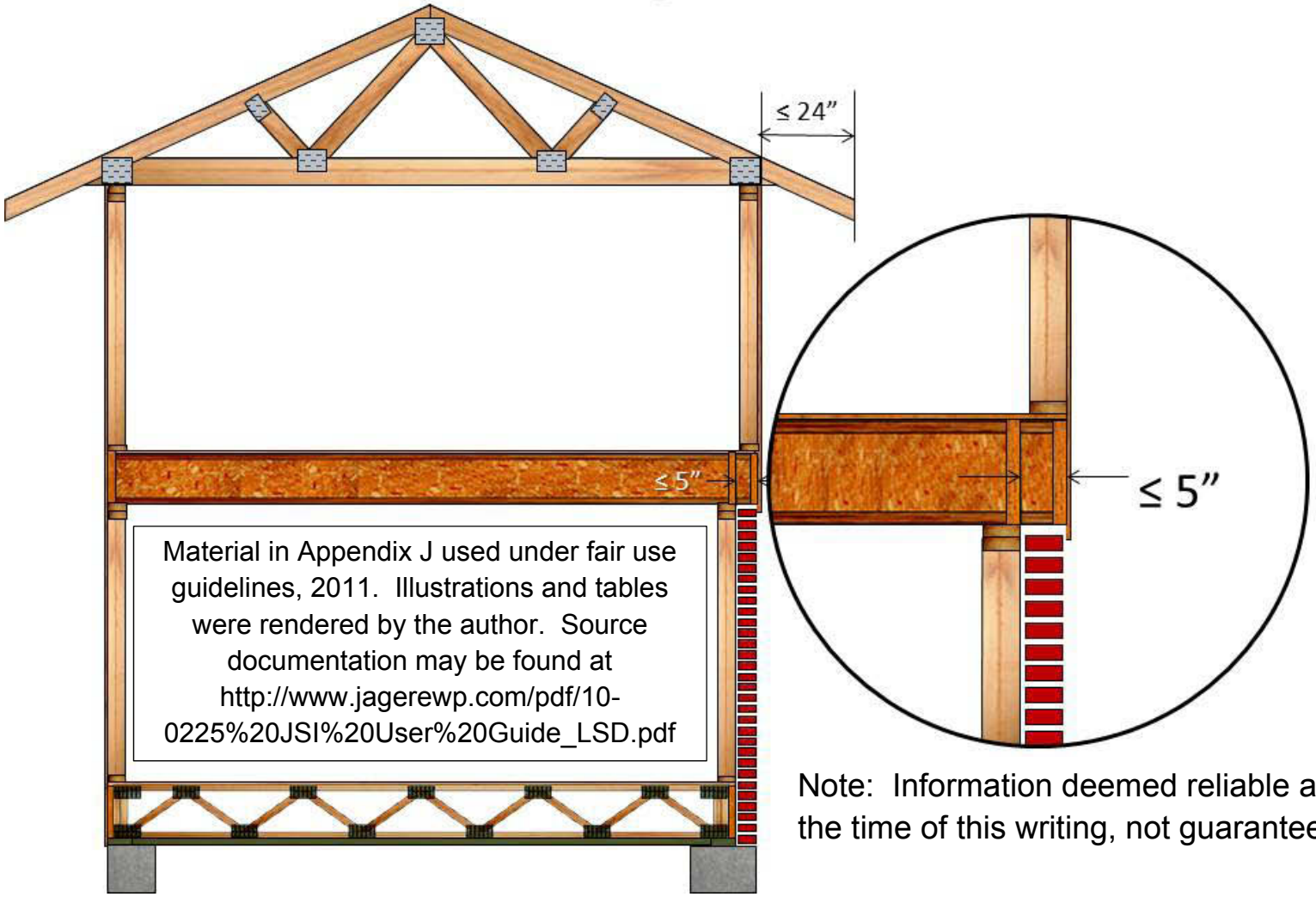

Material in Appendix J used under fair use guidelines, 2011. Illustrations and tables were rendered by the author. Source documentation may be found at http://www.jagerewp.com/pdf/10-0225%20JSI%20User%20Guide_LSD.pdf

Note: Information deemed reliable as of the time of this writing, not guaranteed.

JSI Bearing Cantilever

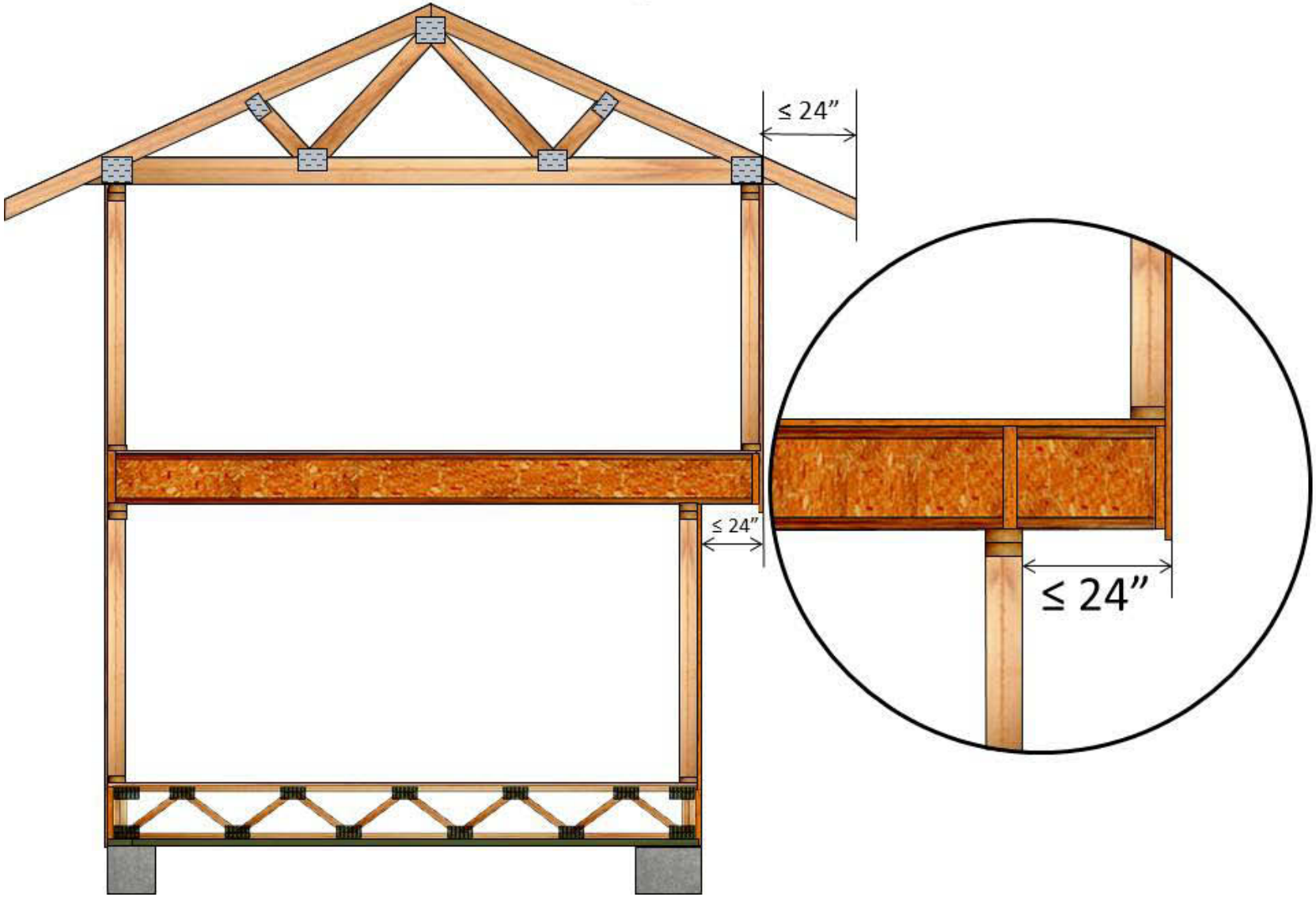

JSI Type 0 No Cantilever Reinforcement

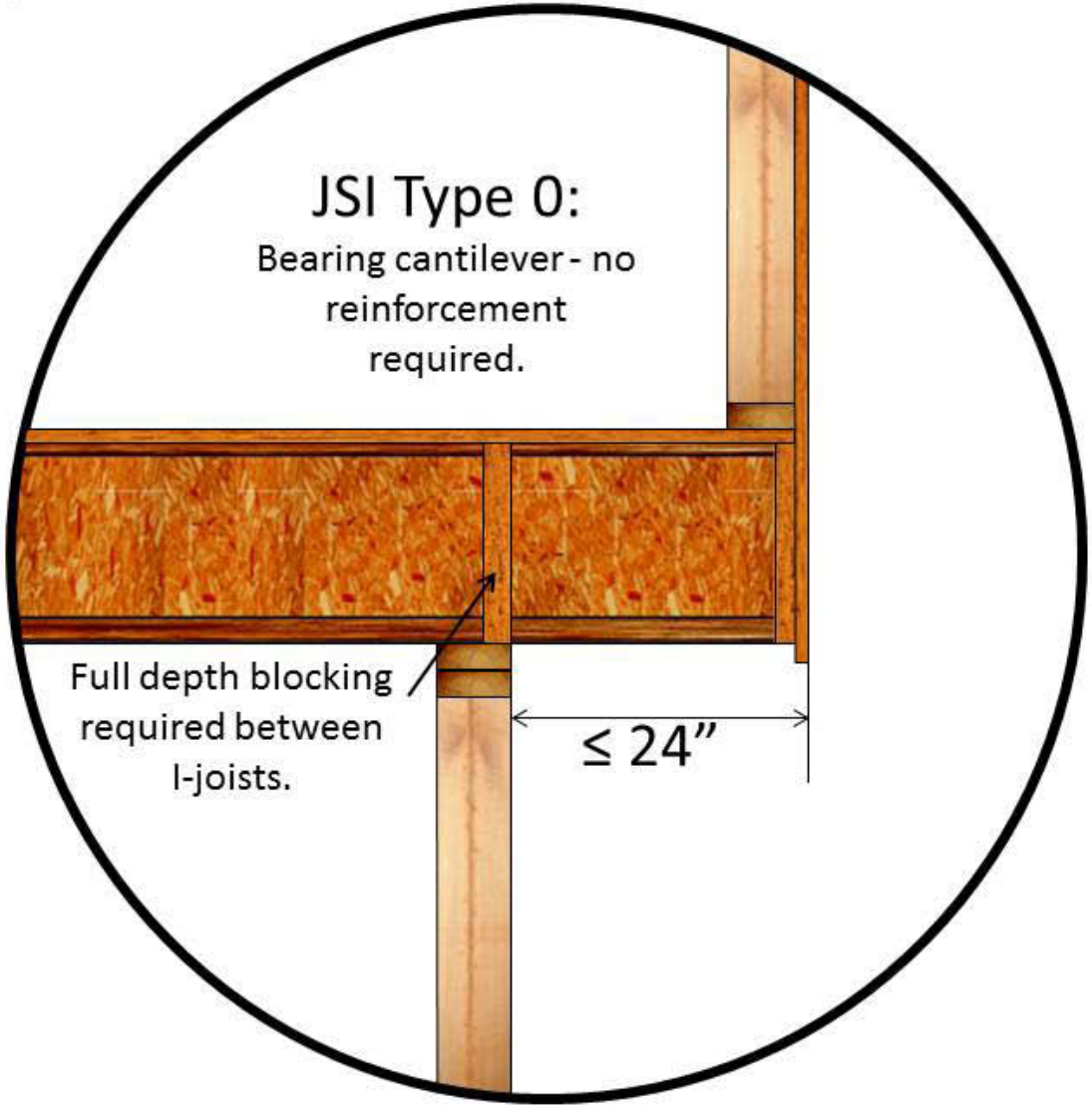

JSI Type 1 Cantilever Reinforcement

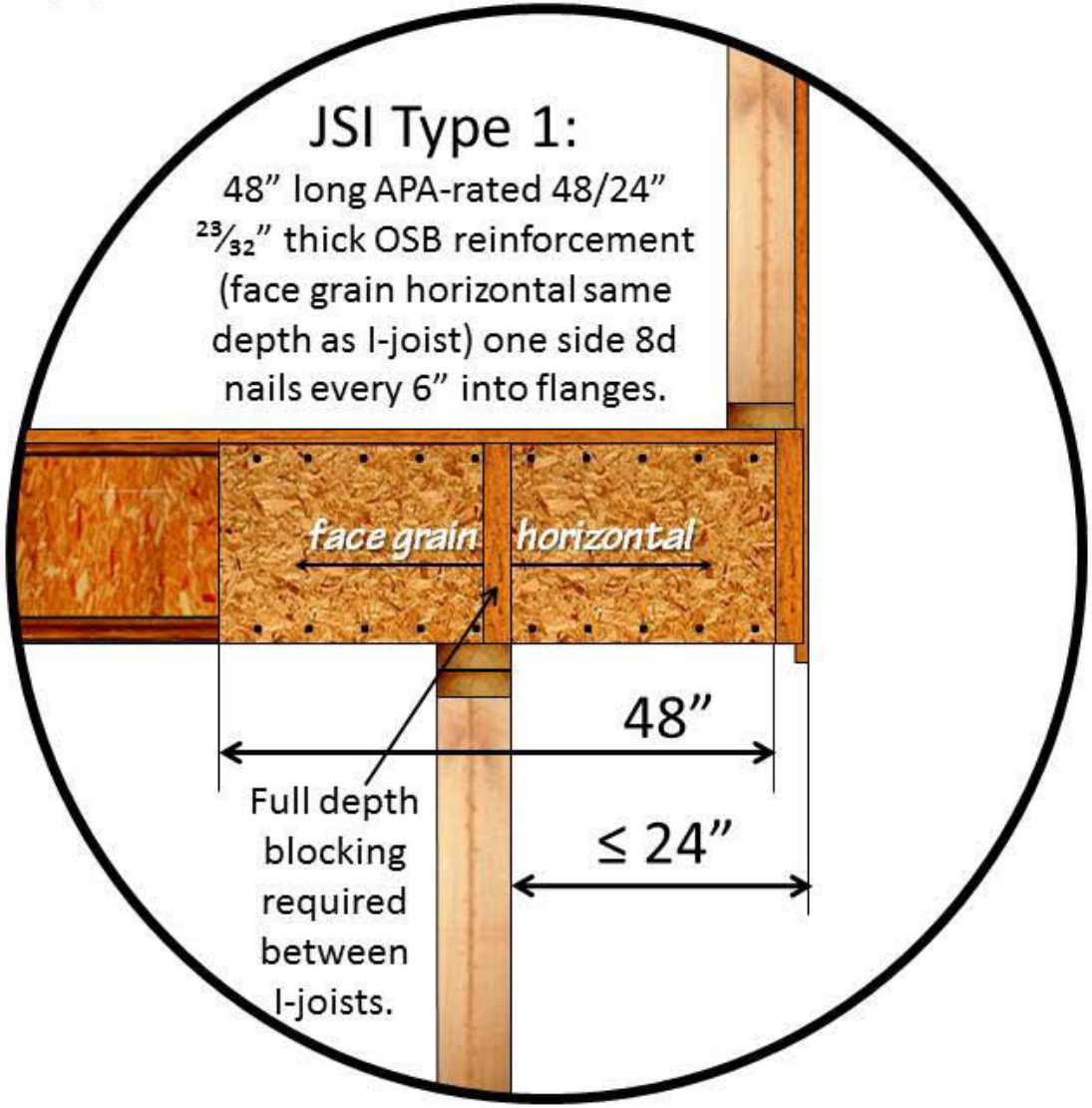

JSI Type 2 Cantilever Reinforcement

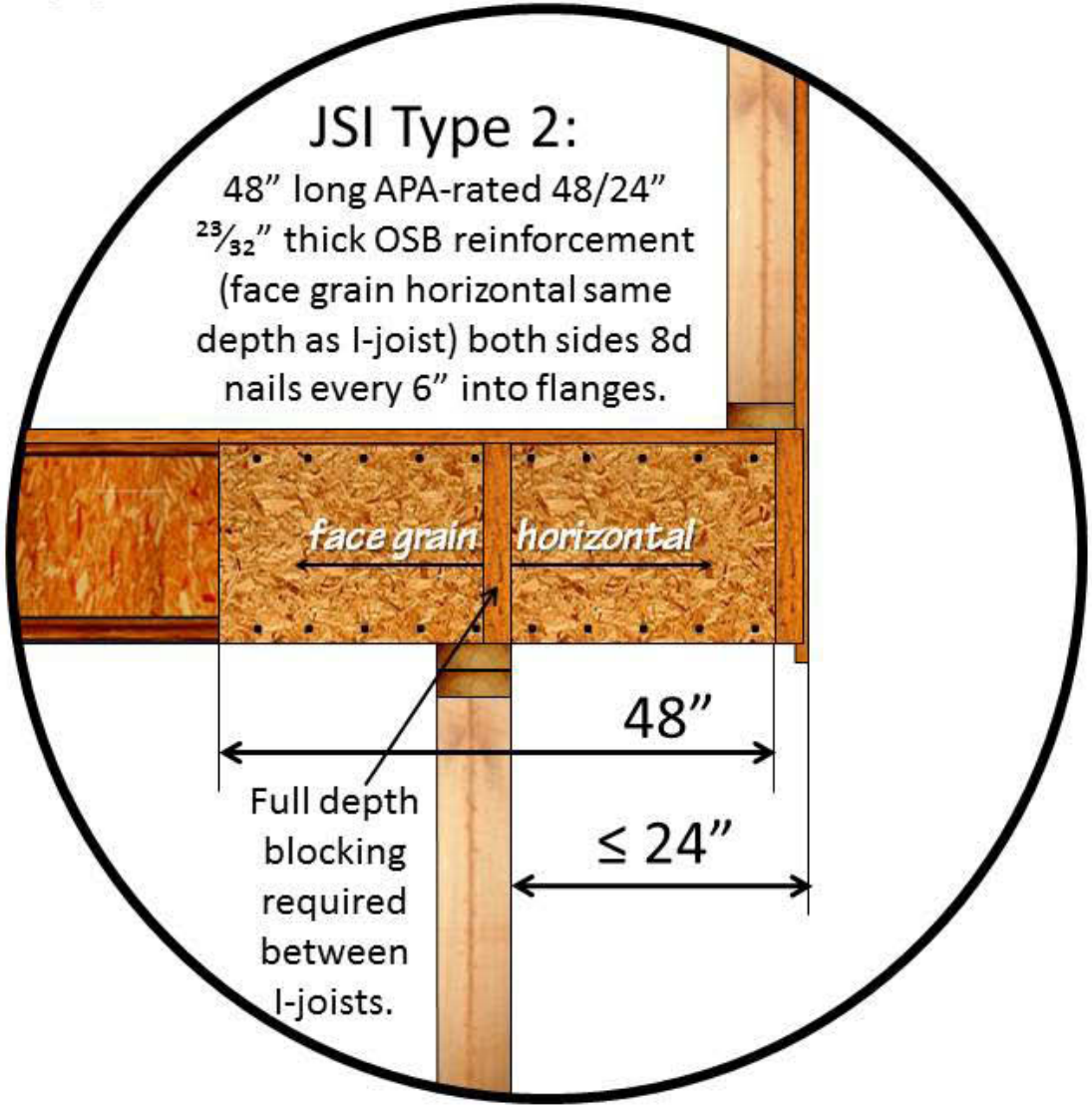

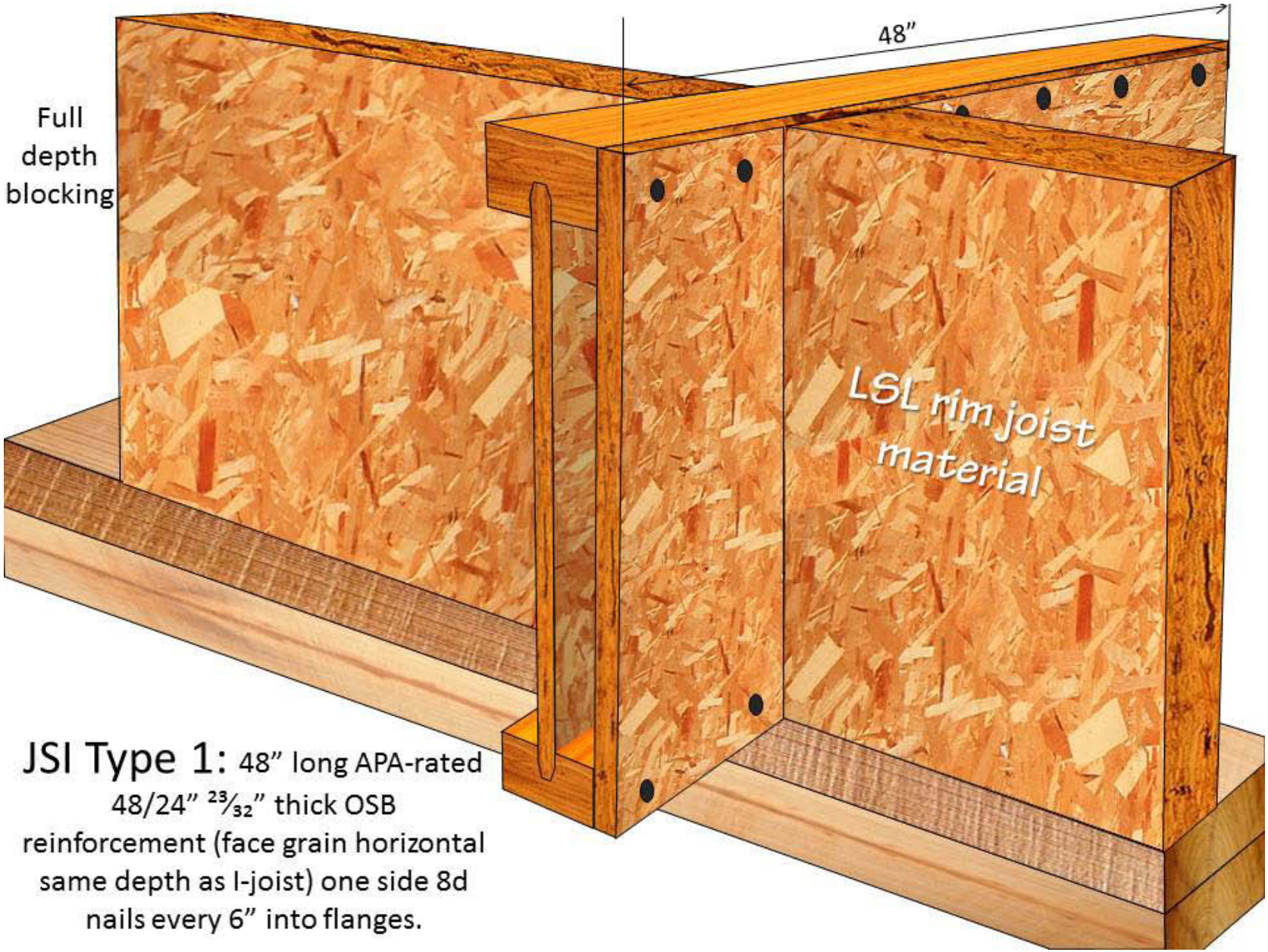

JSI Type 1: 48" long APA-rated 48/24" 23/32" thick OSB reinforcement (face grain horizontal same depth as I-joist) one side 8d nails every 6" into flanges.

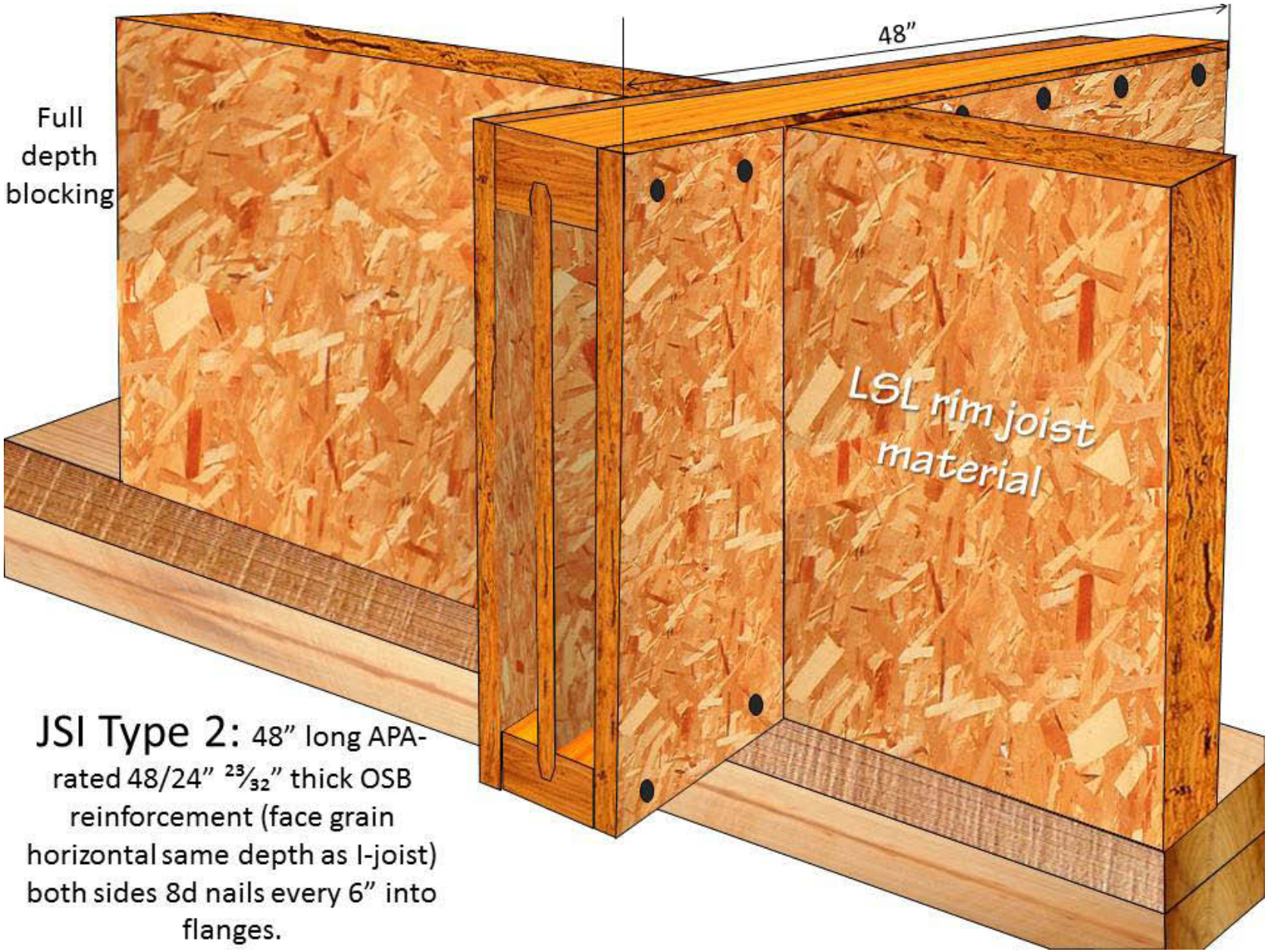

JSI Type 2: 48" long APA-rated 48/24" 23/32" thick OSB reinforcement (face grain horizontal same depth as I-joist) both sides 8d nails every 6" into flanges.

I-Joist Dimensions		Jager JSI 200, JSI 3000, and JSI 4000 I-Joists														
		40 PSF Live Load and 10 PSF Dead Load LL Deflection L/480. TL Deflection L/240														
Depth	Model Number	Maximum Round Hole Dimension (See notes on conversion to rectangular holes*.) JSI 5														
		2"	3"	4"	5"	6"	6¼"	7"	8"	8⅝"	9'	10'	10¾"	11"	12"	12¾"
9 ½"	JSI 2000	0'-7'	1'-8"	3'-1"	4'-7"	6'-2"	6'-7"	N/A	N/A	N/A	N/A	N/A	N/A	N/A	N/A	N/A
	JSI 3000	0'-8"	2'-0"	3'-5"	4'-11"	6'-6"	7'-0"	N/A	N/A	N/A	N/A	N/A	N/A	N/A	N/A	N/A
	JSI 4000	1'-3"	2'-7"	4'-0"	5'-6"	7'-2"	7'-7"	N/A	N/A	N/A	N/A	N/A	N/A	N/A	N/A	N/A
11⅞"	JSI 2000	0'-7"	0'-8"	0'-11"	2'-4"	3'-9"	4'-1"	5'-3"	6'-10"	8'-10"	N/A	N/A	N/A	N/A	N/A	N/A
	JSI 3000	0'-7"	0'-8"	1'-3"	2'-8"	4'-1"	4'-5"	5'-7"	7'-3"	8'-4"	N/A	N/A	N/A	N/A	N/A	N/A
	JSI 4000	0'-7"	0'-9"	2'-1"	3'-6"	4'-11"	5'-4"	6'-6"	8'-2"	9'-4"	N/A	N/A	N/A	N/A	N/A	N/A
14"	JSI 2000	0'-7"	0'-8"	0'-8"	0'-9"	1'-7"	2'-0"	3'-0"	4'-6"	5'-6"	6'-1"	7'-9"	9'-2"	N/A	N/A	N/A
	JSI 3000	0'-7"	0'-8"	0'-8"	0'-9"	2'-1"	2'-6"	3'-6"	5'-0"	6'-0"	6'-7"	8'-4"	9'-9"	N/A	N/A	N/A
	JSI 4000	0'-7"	0'-8"	0'-8"	1'-8"	3'-1"	3'-5"	4'-6"	6'-0"	7'-1"	7'-8"	9'-5"	10'-10"	N/A	N/A	N/A
16"	JSI 2000	0'-7"	0'-8"	0'-8"	0'-9"	0'-9"	0'-10"	1'-3"	2'-8"	3'-7"	4'-2"	5'-8"	6'-10"	7'-4"	9'-1"	10'-6"
	JSI 3000	0'-7"	0'-8"	0'-8"	0'-9"	0'-9"	0'-10"	1'-10"	3'-3"	4'-2"	4'-8"	6'-3"	7'-6"	7'-11"	9'-8"	11'-2"
	JSI 4000	0'-7"	0'-8"	0'-8"	0'-9"	1'-4"	1'-8"	2'-9"	4'-2"	5'-1"	5'-8"	7'-3"	8'-6"	9'-0"	10'-10"	12'-4"

N/A means not allowed - hole size must be reduced.

Values shown assume a minimum bearing length of 1¾" at end bearings and 3½" at interior bearings.

Note: Flange widths differ between Jager models. JSI 2000 and JSI 3000 is 2 5/16", and JSI 4000 is 3½" .

Distances apply to uniformly loaded joists, simple or continuous span. PSF = pounds per square foot.

No more than 3 maximum size holes are permitted per span.

For any condition not specifically noted, contact manufacturer or a registered design professional (RDP) for individual case analysis.

Distances are valid for JSI spacing of 24" or less, with glued and nailed decking. Decking is 23/32" OSB for JSI spacing >19.2". Decking is 19/32" OSB for JSI spacing ≤19.2". Whenever possible, holes should be centered vertically.

A minimum of ⅛" must be maintained between the top or bottom of the hole and the adjacent JSI flange.

* The sides of square holes or longest side of rectangular holes must not exceed ¾ of the max round hole permitted at that location, or twice the size of the largest square hole or twice the length of the longest rectangular hole.

For I-joist with more than one span, use the longest span to determine the hole size and location in either span.

A group of round holes at same location is OK if they meet the requirements of for a single round hole circumscribed around them.

Source: JSI User Guide. No date given.

Jager I-Joist Basics

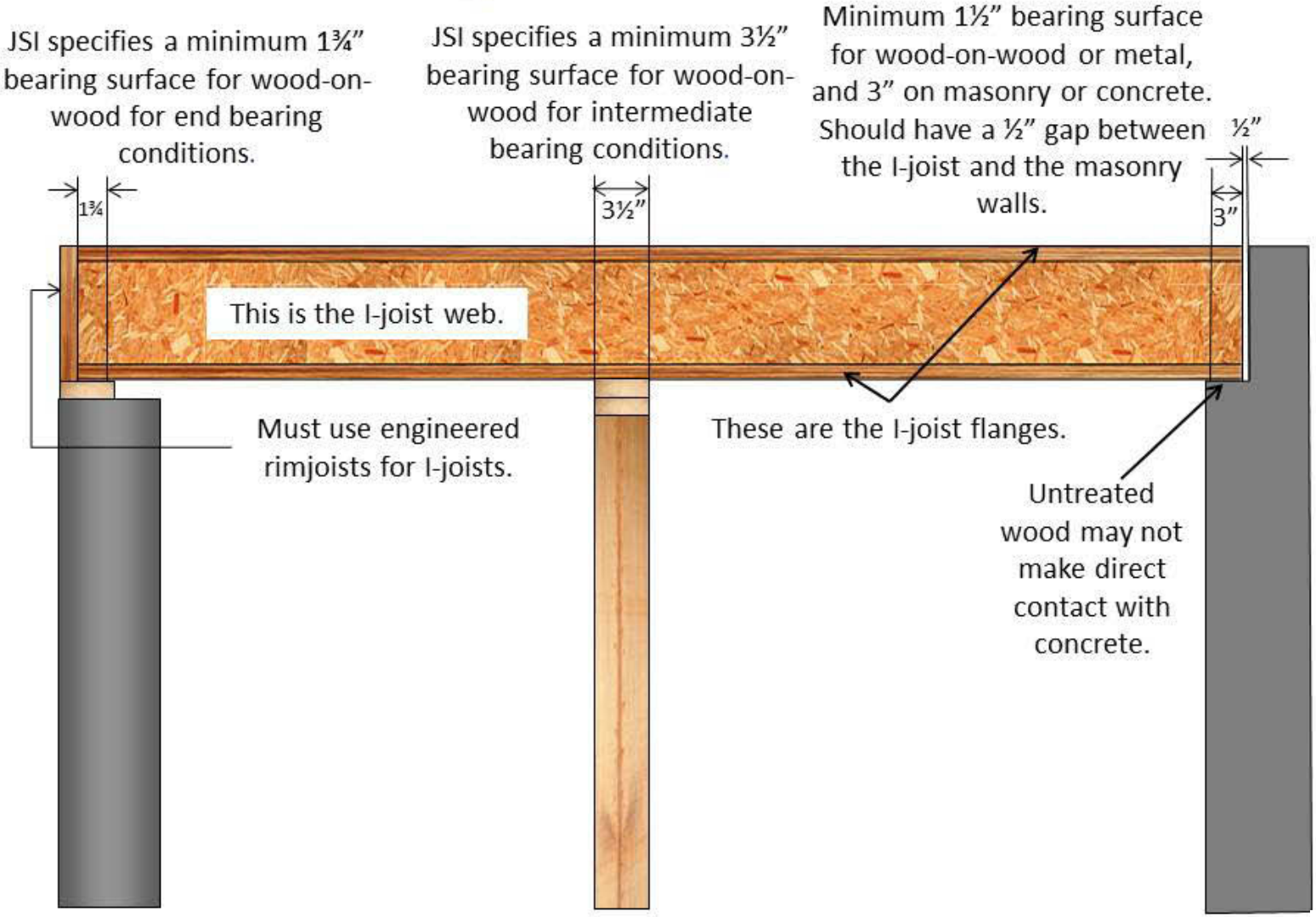

Jager I-Joist Basics

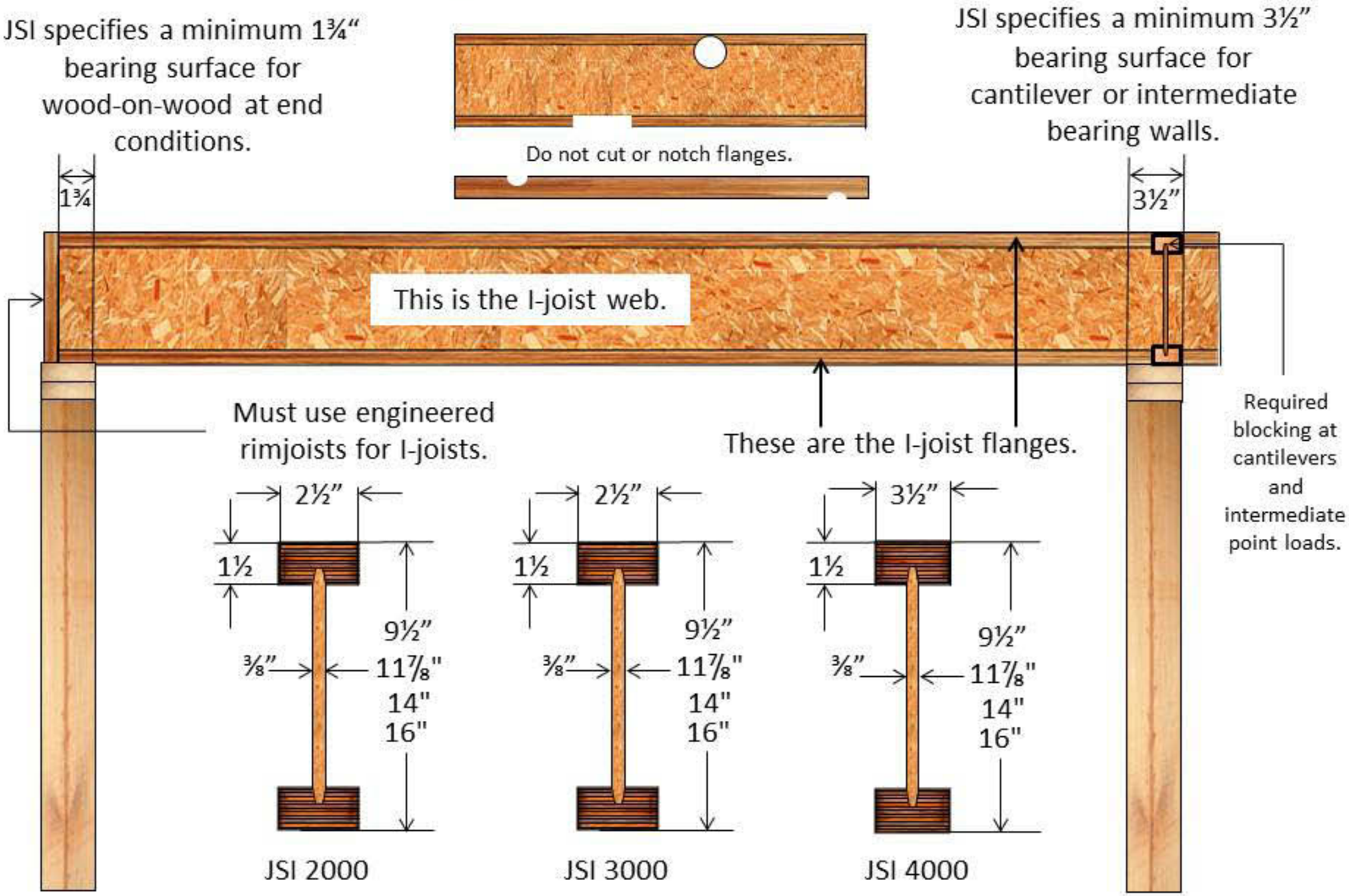

Jager Hole Chart

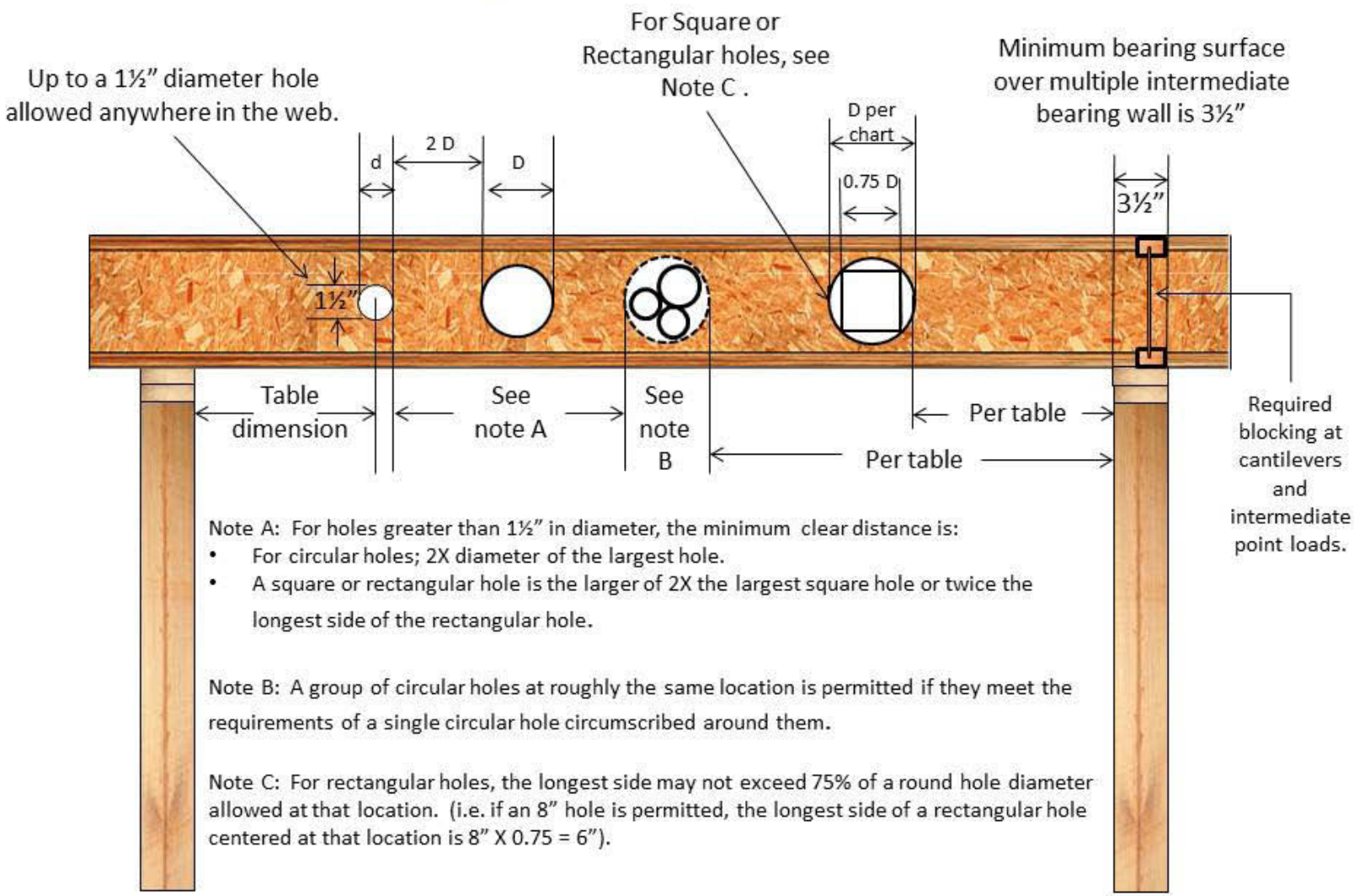

Note A: For holes greater than 1½" in diameter, the minimum clear distance is:

- For circular holes; 2X diameter of the largest hole.
- A square or rectangular hole is the larger of 2X the largest square hole or twice the longest side of the rectangular hole.

Note B: A group of circular holes at roughly the same location is permitted if they meet the requirements of a single circular hole circumscribed around them.

Note C: For rectangular holes, the longest side may not exceed 75% of a round hole diameter allowed at that location. (i.e. if an 8" hole is permitted, the longest side of a rectangular hole centered at that location is 8" X 0.75 = 6").

Jager Installation Errors

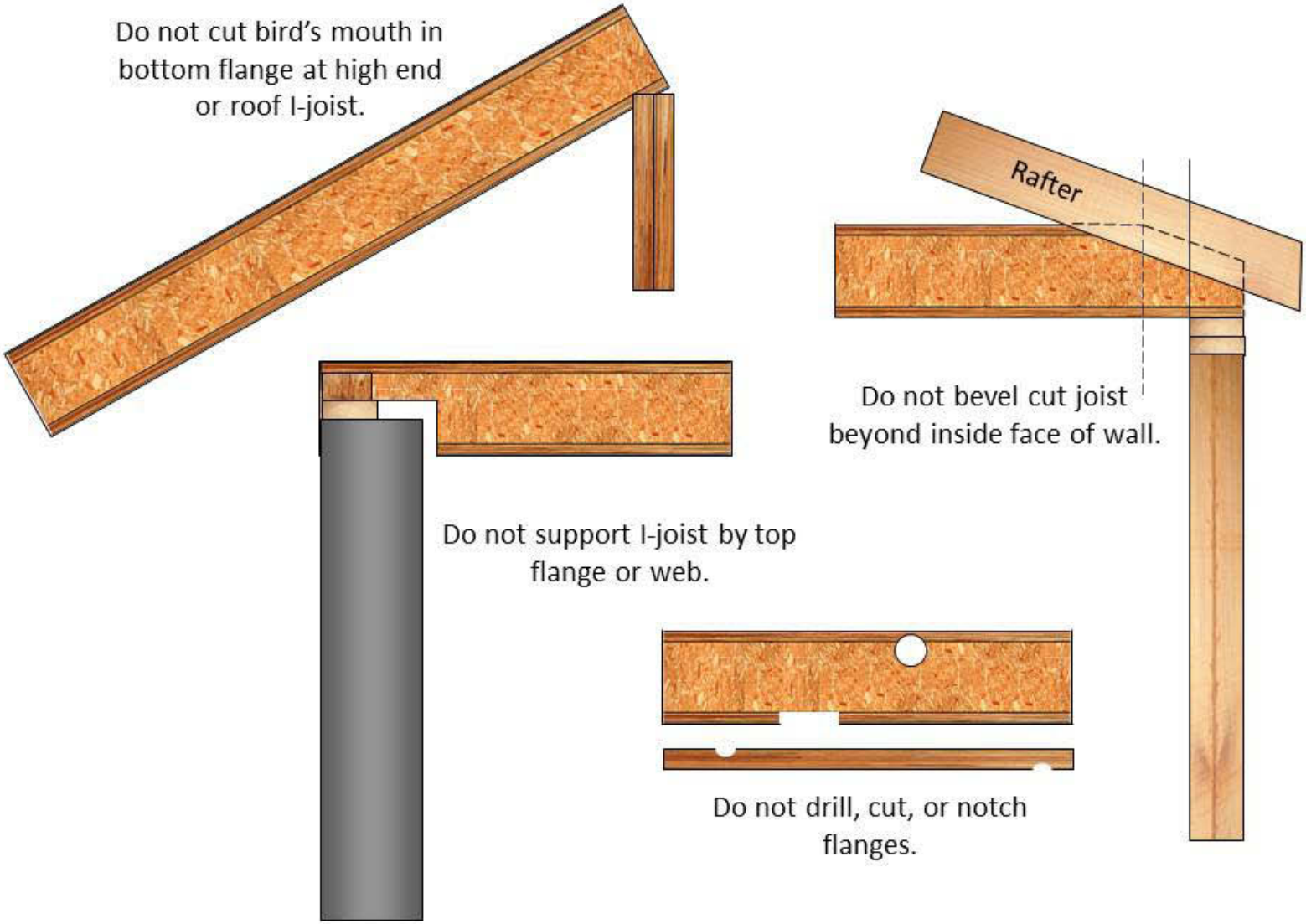

Jager Roof Span Tables

Single Span I-Joist Roof Rafters				
20 PSF Snow Load & 15 PSF Dead Load.				
Live Load Deflection L/240. Total Load Deflection L/180.				
Low Slope ≤ 6:12				
Depth	Series	16" o.c.	19.2" o.c.	24" o.c.
9½"	JSI 2000	22'-0"	20'-8"	18'-10"
	JSI 3000	23'-4"	21'-11"	20'-4"
	JSI 4000	26'-0"	24'-5"	22'-7"
11⁷/₈"	JSI 2000	26'-4"	24'-0"	21'-6"
	JSI 3000	27'-11"	26'-3"	24'-4"
	JSI 4000	31'-1"	29'-2"	27'-1"
14"	JSI 2000	28'-11"	26'-4"	23'-7"
	JSI 3000	31'-10"	29'-11"	27-8"
	JSI 4000	35'-4"	33'-2"	30'-9"
16"	JSI 2000	31'-1"	28'-5"	25'-5"
	JSI 3000	35'-4"	33'-3"	29'-10"
	JSI 4000	39'-2"	36'-10"	34'-1"
Source: JSI User Guide. No date given.				
Values shown are to centerline of bearing, and measured horizontally.				
See Rafter Notes on Page 3.				

Single Span I-Joist Roof Rafters				
20 PSF Snow Load & 15 PSF Dead Load.				
Live Load Deflection L/240. Total Load Deflection L/180.				
6:12 < High Slope ≤ 12:12				
Depth	Series	16" o.c.	19.2" o.c.	24" o.c.
9½"	JSI 2000	19'-7"	18'-5"	17'-1"
	JSI 3000	20'-9"	19'-6"	18'-1"
	JSI 4000	23'-2"	21'-9"	20'-2"
11⁷/₈"	JSI 2000	23'-5"	22'-0"	20'-4"
	JSI 3000	24'-11"	23'-5"	21'-8"
	JSI 4000	27'-8"	26'-0"	24'-1"
14"	JSI 2000	26'-7"	24'-11"	22'-3"
	JSI 3000	28'-4"	26'-8"	24'-8"
	JSI 4000	31'-6"	29'-7"	27'-5"
16"	JSI 2000	29'-5"	23'-10"	24'-0"
	JSI 3000	31'-6"	29'-7"	27'-5"
	JSI 4000	34'-11"	32'-9"	30'-5"
Source: JSI User Guide. No date given.				
Values shown are to centerline of bearing, and measured horizontally.				

Jager Roof Span Tables

Single Span I-Joist Roof Rafters				
25 PSF Snow Load & 15 PSF Dead Load.				
Live Load Deflection L/240. Total Load Deflection L/180.				
Low Slope ≤ 6:12				
Depth	Series	16" o.c.	19.2" o.c.	24" o.c.
9½"	JSI 2000	21'-1"	19'-8"	17'-7"
	JSI 3000	22'-5"	21'-0"	19'-6"
	JSI 4000	24'-11"	23'-5"	21'-8"
11⁷/₈"	JSI 2000	24'-7"	22'-5"	20'-1"
	JSI 3000	26'-10"	25'-2"	23'-4"
	JSI 4000	29'-10"	28'-0"	25'-11"
14"	JSI 2000	27'-0"	24'-7"	22'-0"
	JSI 3000	30'-6"	28'-8"	25'-11
	JSI 4000	33'-11"	31'-10"	29'-6"
16"	JSI 2000	29'-1"	26'-6"	23'-9"
	JSI 3000	33'-11"	31'-2"	27'-10
	JSI 4000	37'-7"	35'-4"	32'-8"
Source: JSI User Guide. No date given.				
Values shown are to centerline of bearing, and measured horizontally.				
See Rafter Notes on Page 3.				

Single Span I-Joist Roof Rafters				
25 PSF Snow Load & 15 PSF Dead Load.				
Live Load Deflection L/240. Total Load Deflection L/180.				
6:12 < High Slope ≤ 12:12				
Depth	Series	16" o.c.	19.2" o.c.	24" o.c.
9½"	JSI 2000	18'-10"	17'-9"	16'-5"
	JSI 3000	20'-0"	18'-10"	17'-5"
	JSI 4000	22'-4"	20'-11"	19'-5"
11⁷/₈"	JSI 2000	22'-7"	21'-3"	19-2"
	JSI 3000	24'-0"	22'-6"	20'-11"
	JSI 4000	26'-8"	25'-1"	23'-3"
14"	JSI 2000	25'-8"	23'-6"	21'-1"
	JSI 3000	27'-4"	25'-8"	23'-9"
	JSI 4000	30'-4"	28'-6"	26'-5"
16"	JSI 2000	27'-9"	25'-4"	22'-8"
	JSI 3000	30'-4"	28'-6"	26'-5"
	JSI 4000	33'-7"	31'-7"	29'-3"
Source: JSI User Guide. No date given.				
Values shown are to centerline of bearing, and measured horizontally.				

Jager Roof Span Tables

JSI I-Joist Roof Rafter Notes:
Values shown assume a minimum bearing length of 1¾" at end bearings.
Must provide continuous lateral support for top edge of the JSI to prevent lateral rotation.
Values shown are measured horizontally.
For sloping JSI, provide hanger nails at each support to resist the factored sliding force.
For JSI depths less than or equal to 16", web stiffeners are not required for tabulated values, except as required by hanger hardware manufacturer.
For all other conditions, contact Jager Engineered Wood Products.

Appendix K: Louisiana Pacific Details

Material in Appendix K used under fair use guidelines, 2011. Illustrations and tables were rendered by the author. Source documentation may be found at http://www.lpcorp.com/resources/literature/ and http://www.strongtie.com/ftp/csg/CSG-LP09.pdf and http://www.uspconnectors.com/pdfs/lpguide.pdf

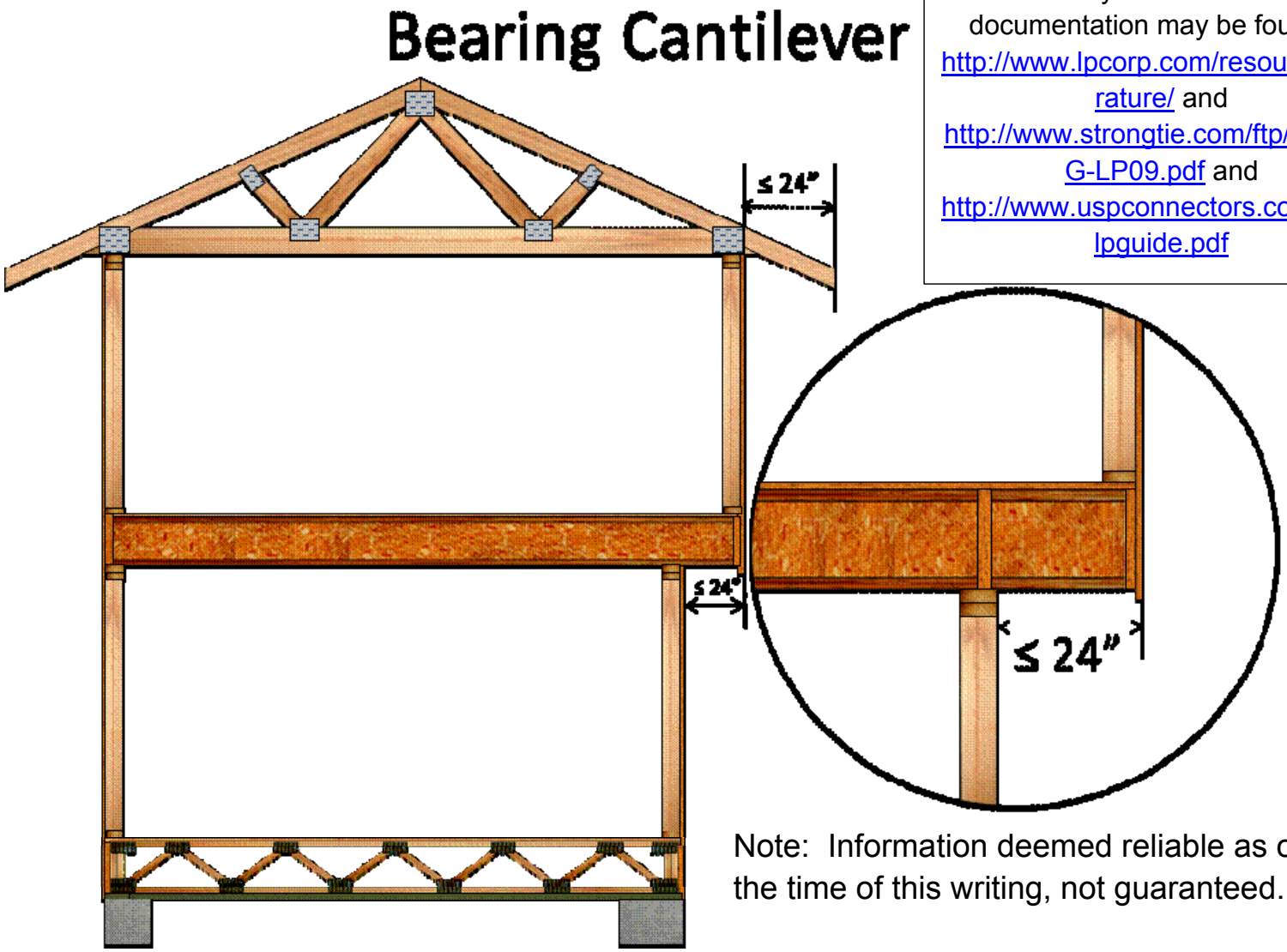

Note: Information deemed reliable as of the time of this writing, not guaranteed.

Brick Ledge Cantilever

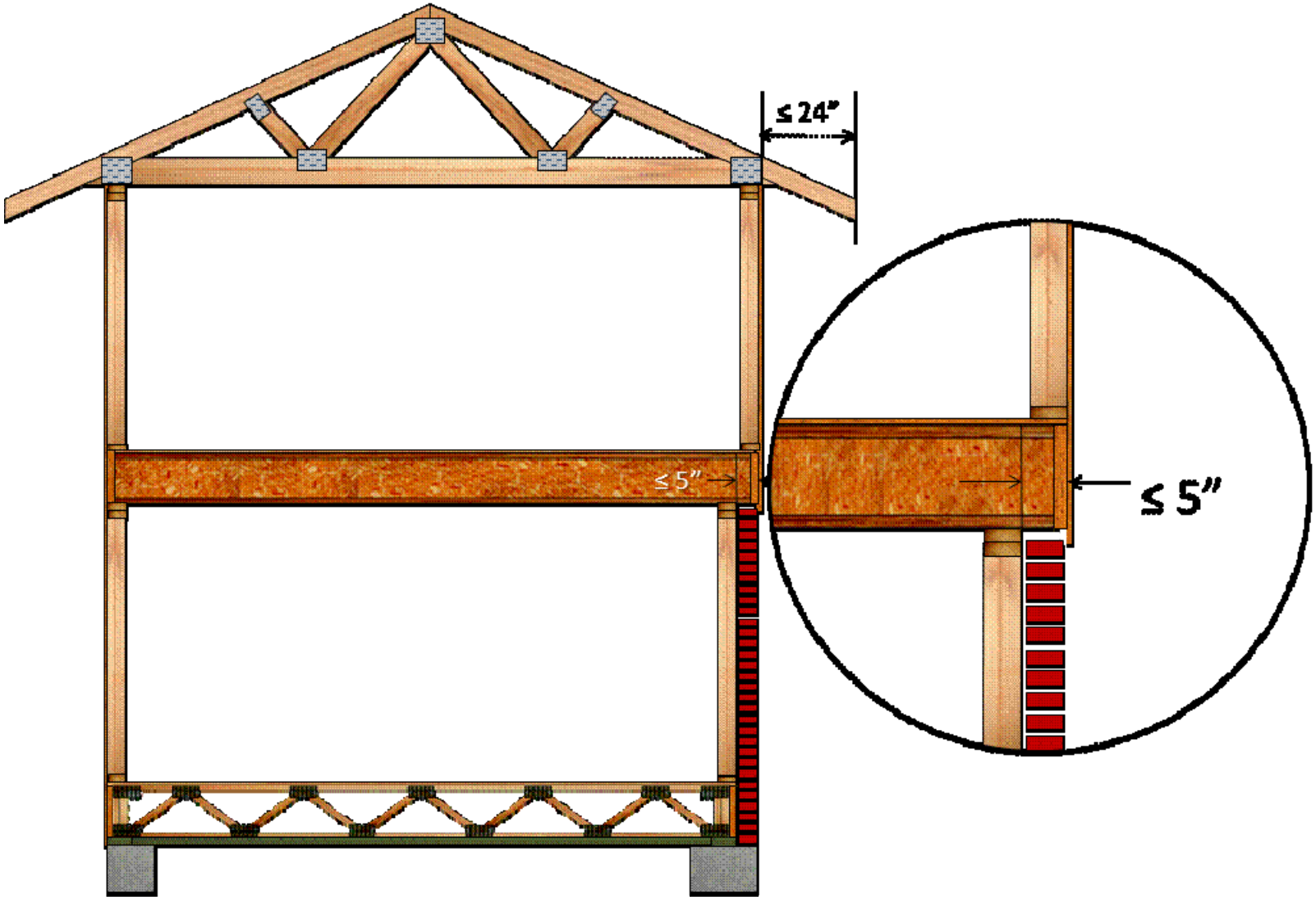

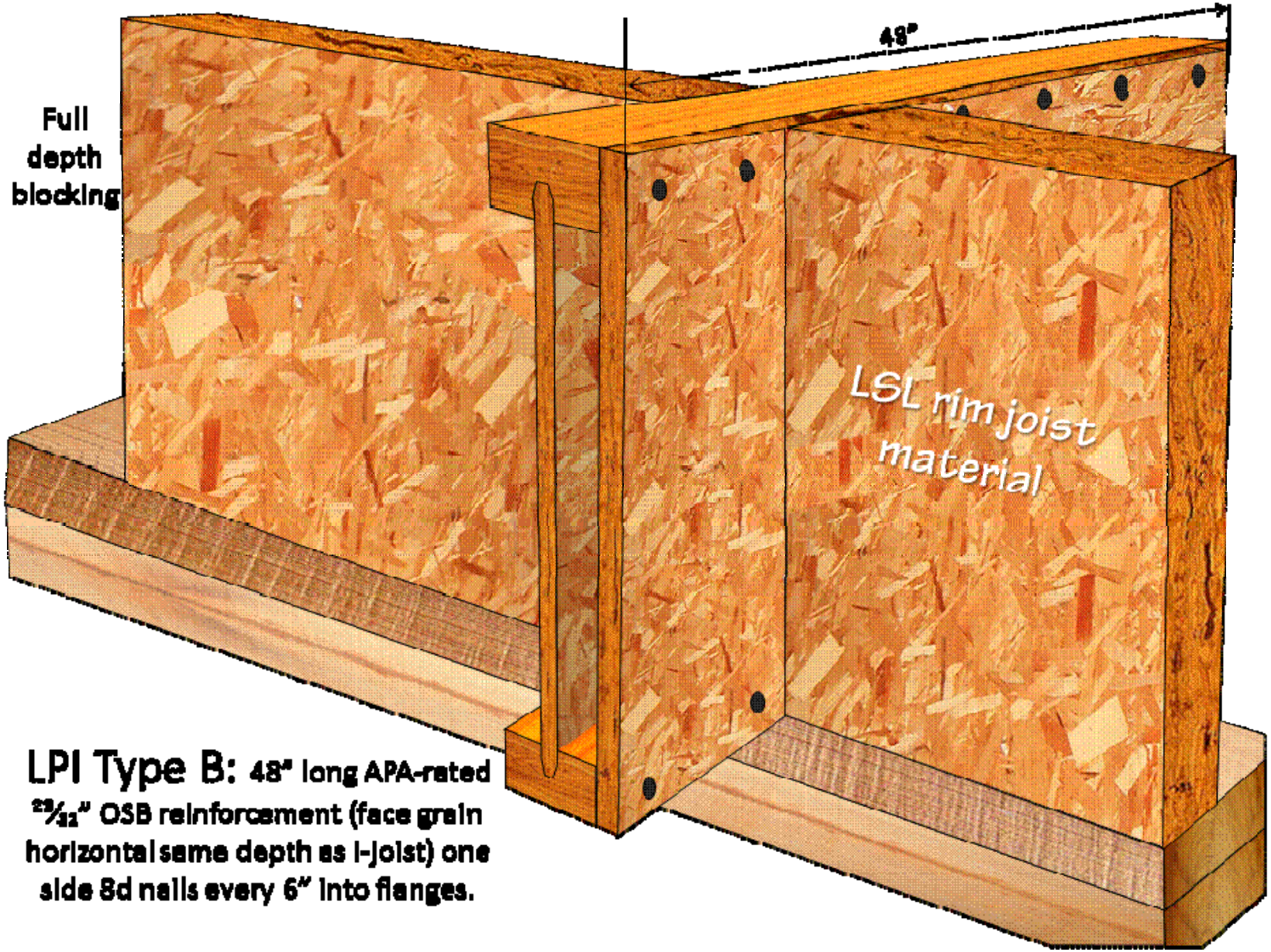

LPI Type B: 48" long APA-rated 23/32" OSB reinforcement (face grain horizontal same depth as I-joist) one side 8d nails every 6" into flanges.

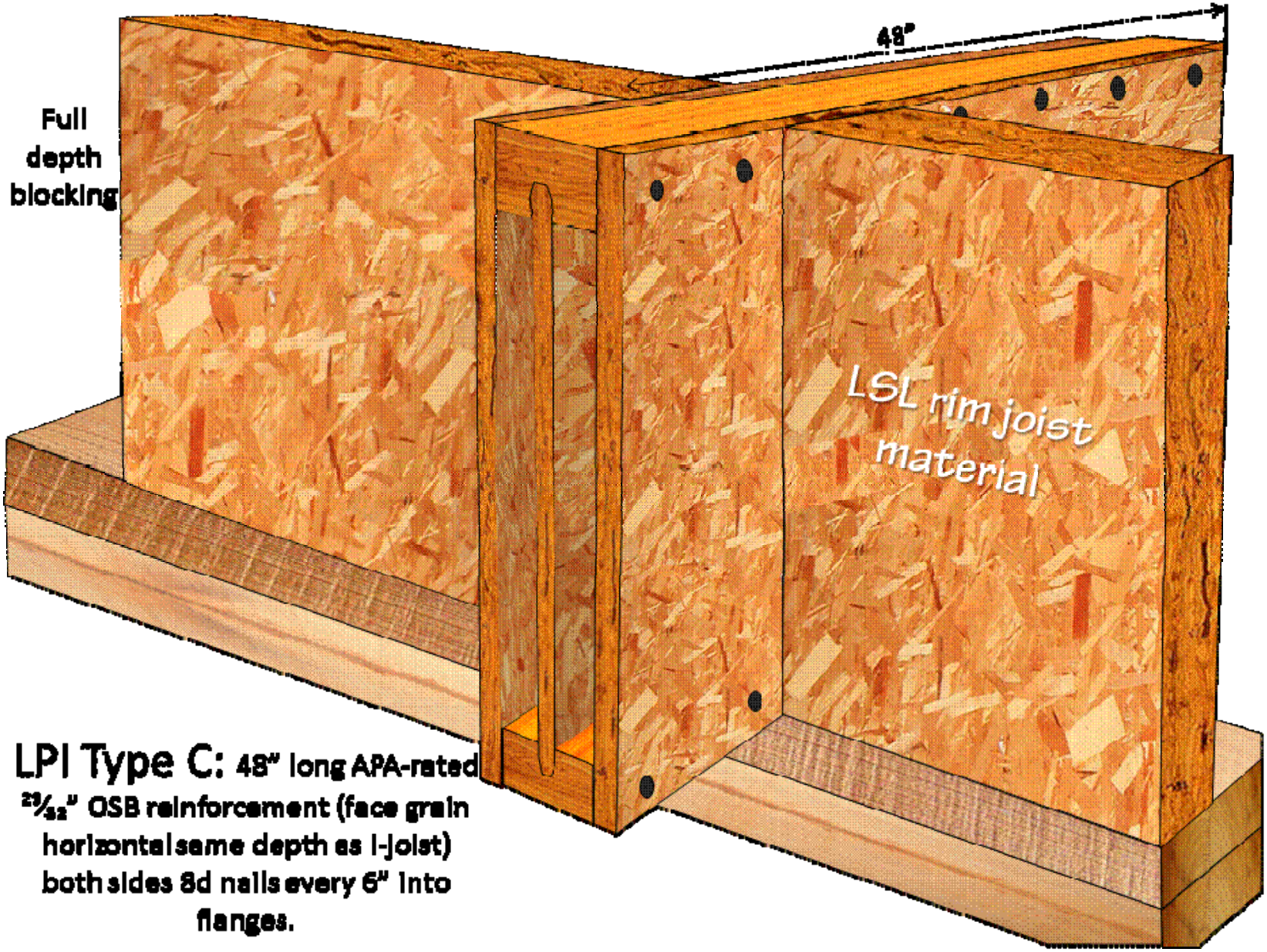

LPI Type C: 48" long APA-rated 29/32" OSB reinforcement (face grain horizontal same depth as I-joist) both sides 8d nails every 6" into flanges.

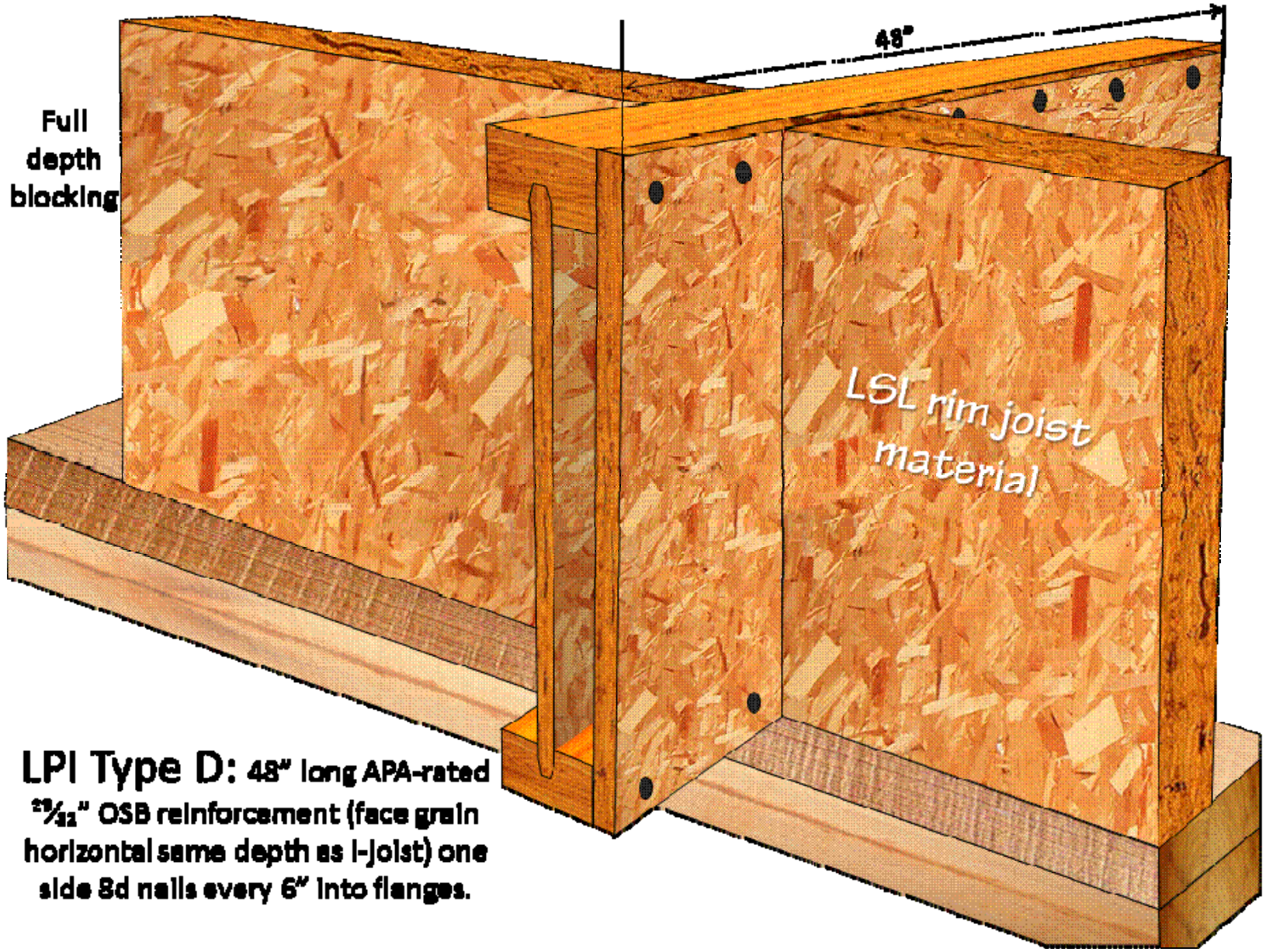

LPI Type D: 48" long APA-rated 23/32" OSB reinforcement (face grain horizontal same depth as I-joist) one side 8d nails every 6" into flanges.

LPI Type A No Cantilever Reinforcement

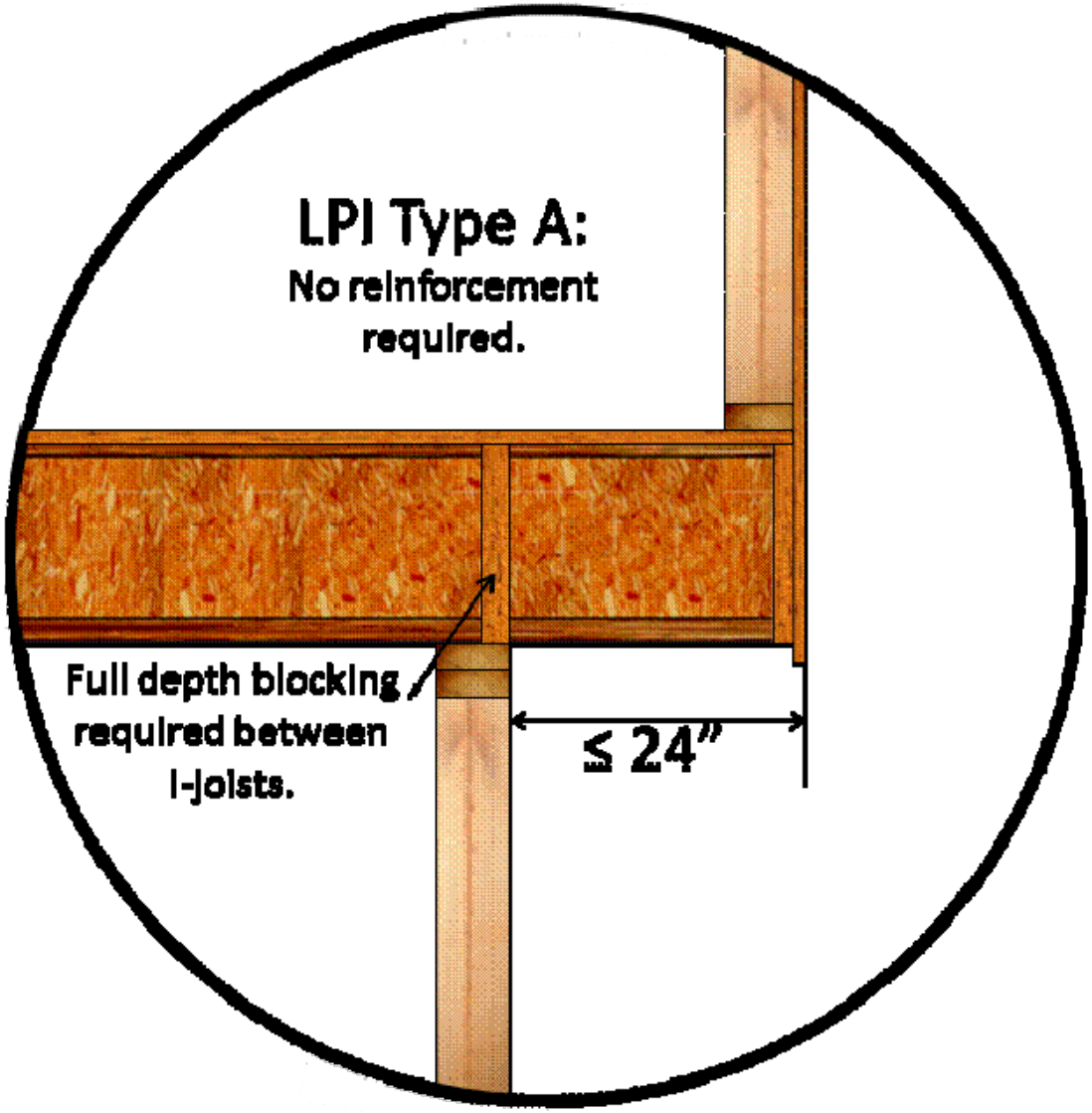

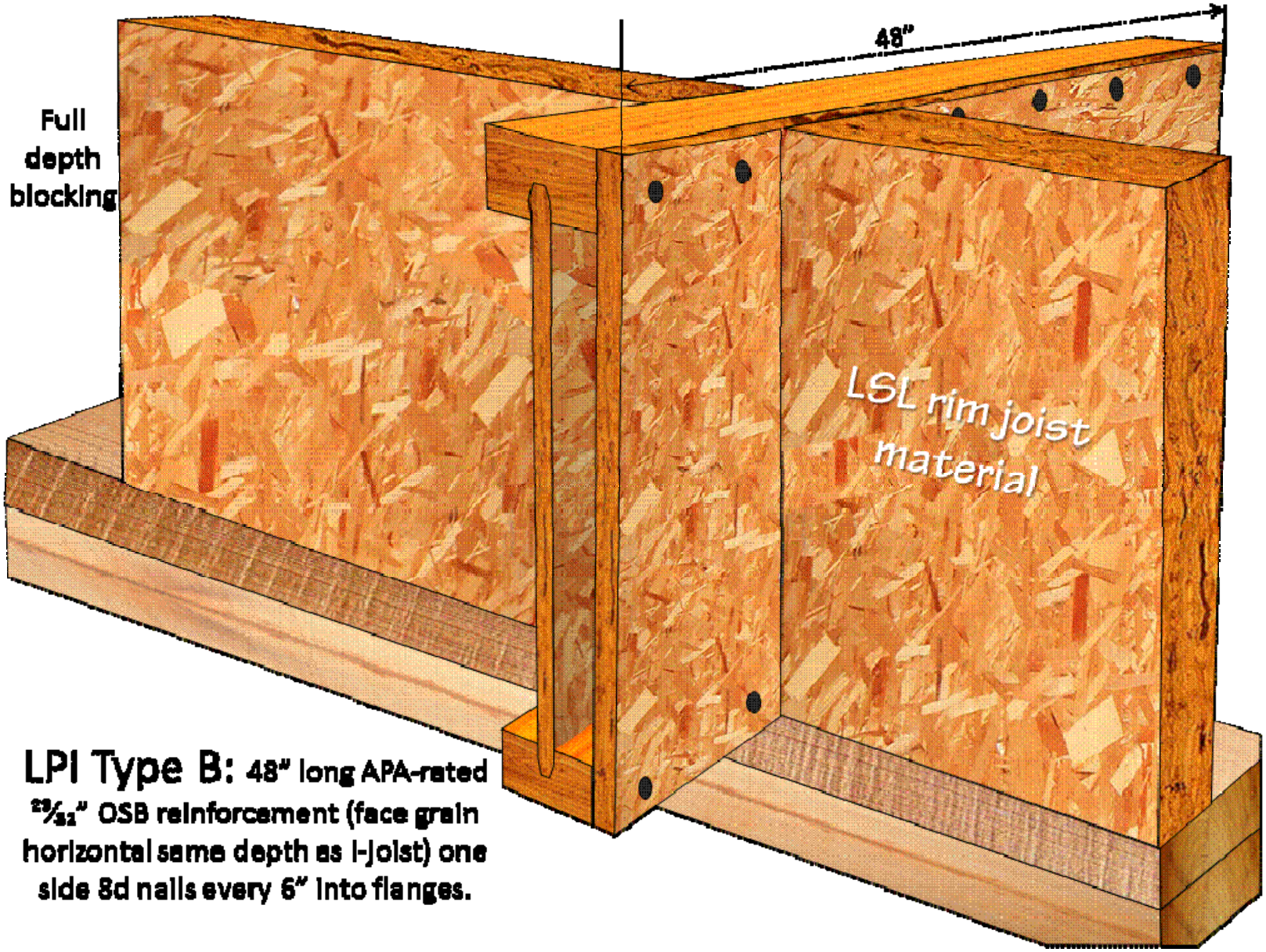

LPI Type B: 48" long APA-rated 23/32" OSB reinforcement (face grain horizontal same depth as I-joist) one side 8d nails every 6" into flanges.

LPI Type C Cantilever Reinforcement

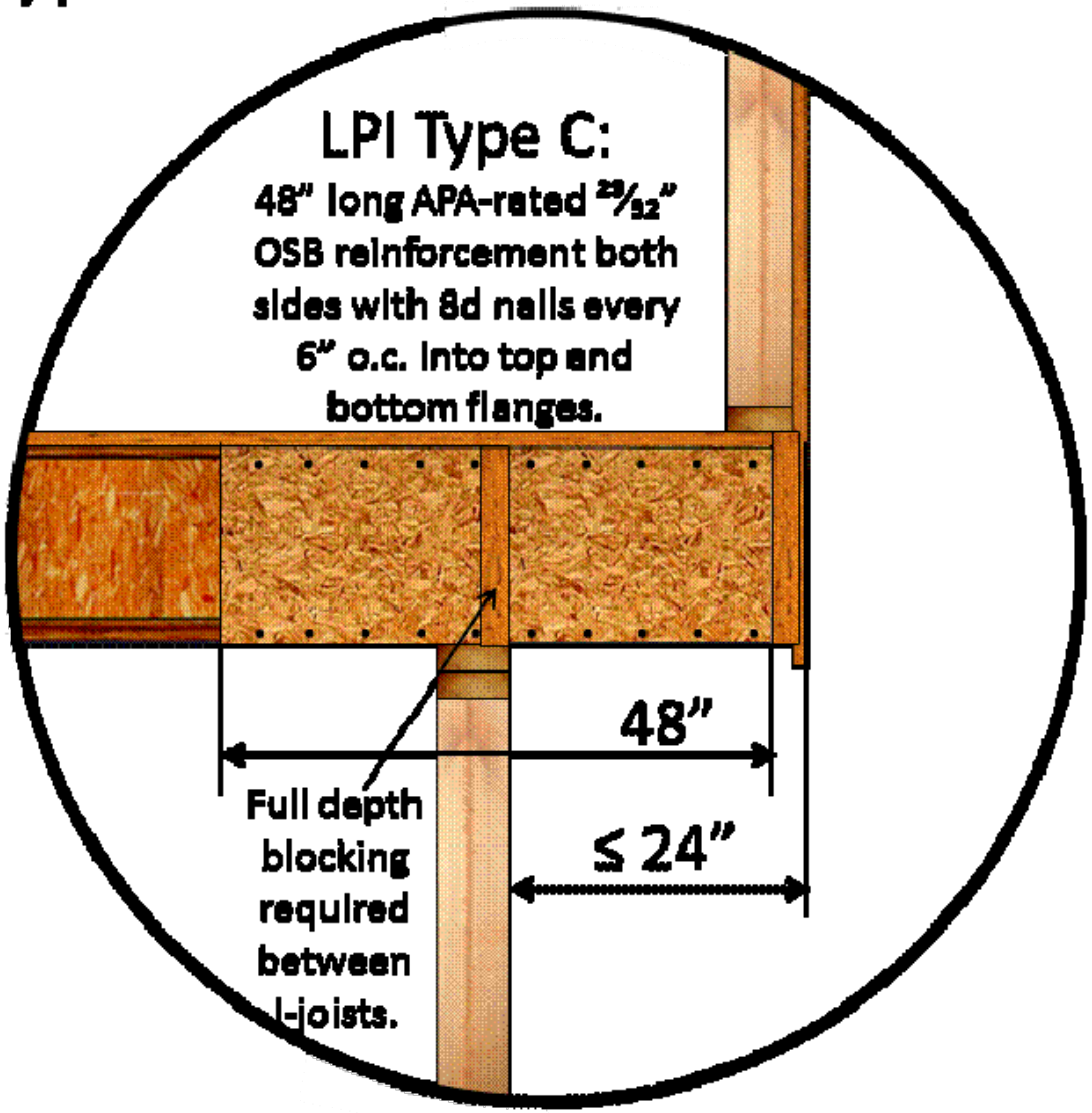

LPI Type D Cantilever Reinforcement

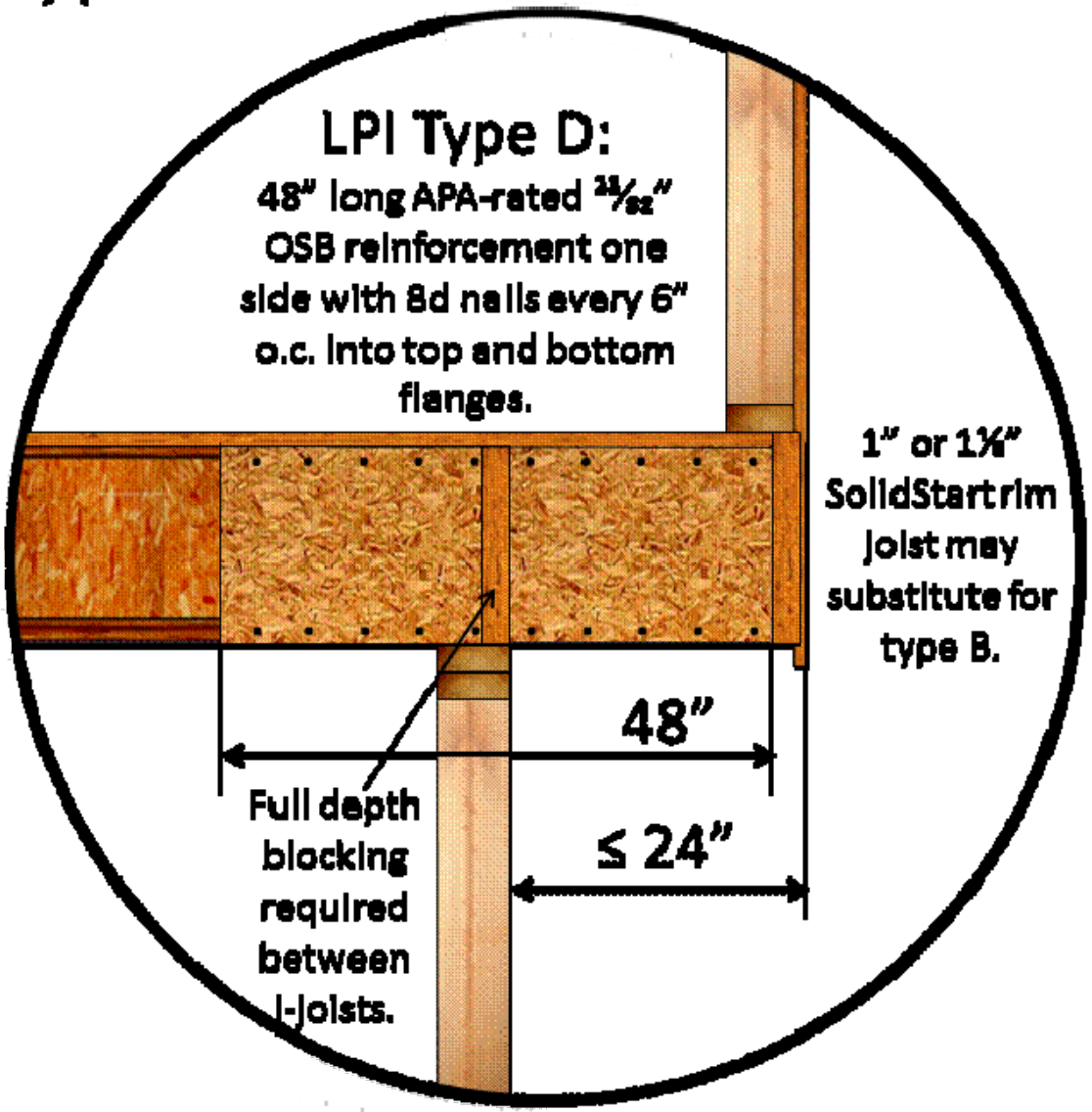

LPI Type W Cantilever Reinforcement

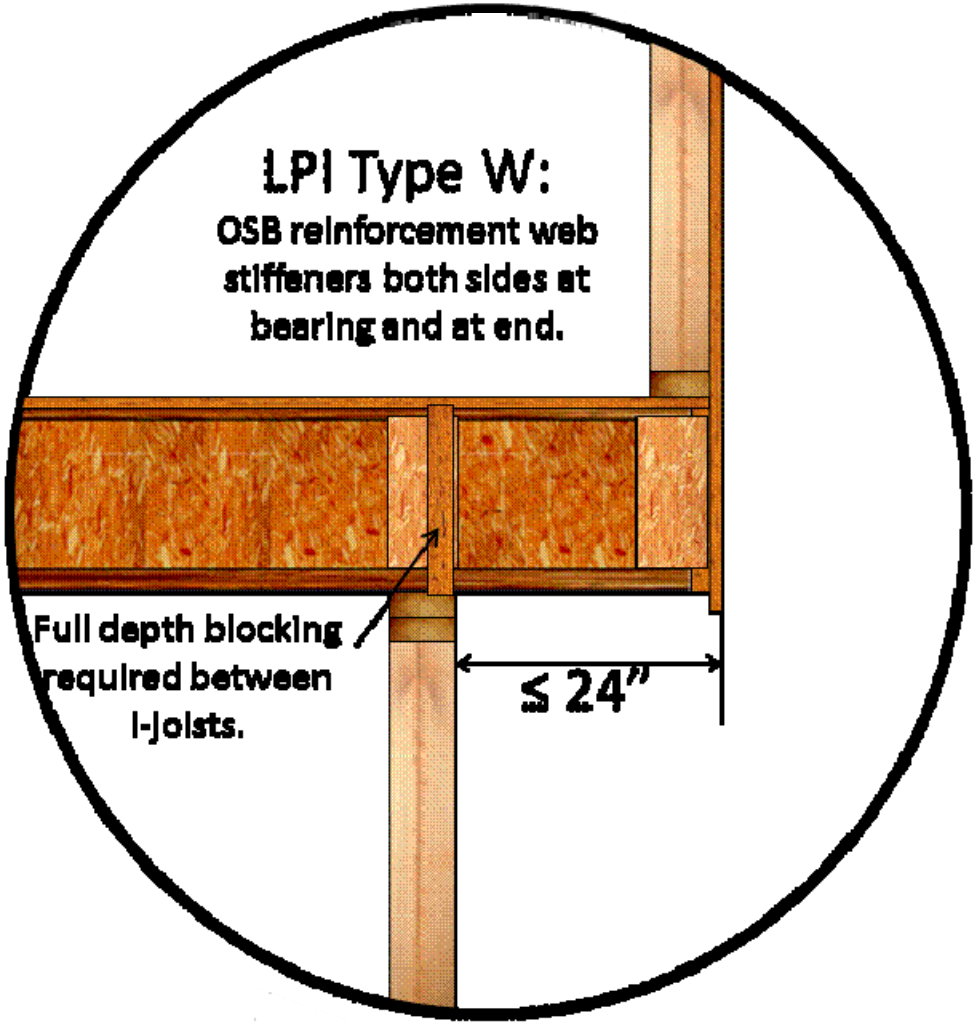

Louisiana Pacific I-Joist Cantilever Reinforcement													
Roof Load	**Truss Span**	**9½" LPI 20 Plus**				**9½" LPI 32 Plus**				**9½" LPI 42 Plus**			
		12" o.c.	**16" o.c.**	**19.2" o.c.**	**24" o.c.**	**12" o.c.**	**16" o.c.**	**19.2" o.c.**	**24" o.c.**	**12" o.c.**	**16" o.c.**	**19.2" o.c.**	**24" o.c.**
30 PSF	22 ft	A	A	A	W	A	A	A	W	A	A	A	A
	24 ft	A	A	A	W	A	A	A	W	A	A	A	A
	26 ft	A	A	A	W	A	A	A	W	A	A	A	A
	28 ft	A	A	A	B/D	A	A	A	B/D	A	A	A	A
	30 ft	A	A	A	B/D	A	A	A	B/D	A	A	A	B/D
	32 ft	A	A	W	B/D	A	A	W	B/D	A	A	A	B/D
	34 ft	A	A	W	B/D	A	A	W	B/D	A	A	A	B/D
	36 ft	A	A	W	B/D	A	A	W	B/D	A	A	A	B/D
	38 ft	A	A	W	B/D	A	A	W	B/D	A	A	A	B/D
	40 ft	A	A	B/D	C	A	A	B/D	C	A	A	A	B/D
	42 ft	A	A	B/D	C	A	A	B/D	C	A	A	A	B/D

PSF = pounds per square foot. PLF = pounds per linear foot. Values assume cantilever end-bearing length of ≥ 3½"; limited to SPF bearing.

A = No reinforcement required. W = Web stiffener required at bearing point. B = 23/32" OSB (or equal) reinforcement one side only.
C = 23/32" OSB (or equal) reinforcement both sides. D = 1" or 1⅛" LP SolidStart rim board may be substituted for detail B.

Floor design loads shall not exceed 40 PSF live and 25 PSF dead load. Maximum cantilever length is 24". Wall load assumed to be 100 PLF.

Roof load is the total load on the trusses. Truss span is the out-to-out distance of the truss bearing walls. Maximum 24" overhang.

Reinforcement when required shall match the depth of the I-joist.

Closure at the end of the cantilever shall be a minimum of 23/32" APA-rated OSB (or equal), or per code if different.

Source: LPEW0124 08/08 15M MW PSF = pounds per square foot.

Roof Load	**Truss Span**	**11⁷/₈" LPI 20 Plus**				**11⁷/₈" LPI 32 Plus**				**11⁷/₈" LPI 42 Plus**			
		12" o.c.	**16" o.c.**	**19.2" o.c.**	**24" o.c.**	**12" o.c.**	**16" o.c.**	**19.2" o.c.**	**24" o.c.**	**12" o.c.**	**16" o.c.**	**19.2" o.c.**	**24" o.c.**
30 PSF	22 ft	A	A	A	A	A	A	A	W	A	A	A	A
	24 ft	A	A	A	W	A	A	A	W	A	A	A	A
	26 ft	A	A	A	W	A	A	A	W	A	A	A	A
	28 ft	A	A	A	W	A	A	A	W	A	A	A	A
	30 ft	A	A	A	W	A	A	A	B/D	A	A	A	A
	32 ft	A	A	A	B/D	A	A	A	B/D	A	A	A	A
	34 ft	A	A	A	B/D	A	A	A	B/D	A	A	A	A
	36 ft	A	A	A	B/D	A	A	W	B/D	A	A	A	A
	38 ft	A	A	W	B/D	A	A	W	B/D	A	A	A	A
	40 ft	A	A	W	C	A	A	W	C	A	A	A	W
	42 ft	A	A	W	C	A	A	W	C	A	A	A	B/D

Roof Load	Truss Span	14" LPI 20 Plus				14" LPI 32 Plus				14" LPI 42 Plus			
		12" o.c.	16" o.c.	19.2" o.c.	24" o.c.	12" o.c.	16" o.c.	19.2" o.c.	24" o.c.	12" o.c.	16" o.c.	19.2" o.c.	24" o.c.
30 PSF	22 ft	A	A	A	A	A	A	A	W	A	A	A	A
	24 ft	A	A	A	A	A	A	A	W	A	A	A	A
	26 ft	A	A	A	W	A	A	A	W	A	A	A	A
	28 ft	A	A	A	W	A	A	A	W	A	A	A	A
	30 ft	A	A	A	W	A	A	A	W	A	A	A	A
	32 ft	A	A	A	W	A	A	A	B/D	A	A	A	A
	34 ft	A	A	A	W	A	A	A	B/D	A	A	A	A
	36 ft	A	A	A	B/D	A	A	A	B/D	A	A	A	A
	38 ft	A	A	W	B/D	A	A	W	B/D	A	A	A	A
	40 ft	A	A	W	B/D	A	A	W	B/D	A	A	A	W
	42 ft	A	A	W	B/D	A	A	W	B/D	A	A	A	W

PSF = pounds per square foot. PLF = pounds per linear foot. Values assume cantilever end-bearing length of ≥ 3½"; limited to SPF bearing.

A = No reinforcement required. W = Web stiffener required at bearing point. B = 23/32" OSB (or equal) reinforcement one side only. C = 23/32" OSB (or equal) reinforcement both sides. D = 1" or 1⅛" LP SolidStart rim board may be substituted for detail B.

Floor design loads shall not exceed 40 PSF live and 25 PSF dead load. Maximum cantilever length is 24". Wall load assumed to be 100 PLF.

Roof load is the total load on the trusses. Truss span is the out-to-out distance of the truss bearing walls. Maximum 24" overhang.

Reinforcement when required shall match the depth of the I-joist.

Closure at the end of the cantilever shall be a minimum of 23/32" APA-rated OSB (or equal), or per code if different.

Source: LPEW0124 08/08 15M MW PSF = pounds per square foot.

Roof Load	Truss Span	16" LPI 32 Plus				16" LPI 42 Plus			
		12" o.c.	16" o.c.	19.2" o.c.	24" o.c.	12" o.c.	16" o.c.	19.2" o.c.	24" o.c.
30 PSF	22 ft	A	A	A	A	A	A	A	A
	24 ft	A	A	A	W	A	A	A	A
	26 ft	A	A	A	W	A	A	A	A
	28 ft	A	A	A	W	A	A	A	A
	30 ft	A	A	A	W	A	A	A	A
	32 ft	A	A	A	W	A	A	A	A
	34 ft	A	A	A	B/D	A	A	A	A
	36 ft	A	A	A	B/D	A	A	A	A
	38 ft	A	A	W	B/D	A	A	A	A
	40 ft	A	A	W	B/D	A	A	W	W
	42 ft	A	A	W	B/D	A	A	W	W

Min distances from **nearest edge of round hole** to nearest bearing face.															
I-Joist Dimensions		**GPI 20, 40, and 65 I-Joists with LVL flanges**													
		Distance From End, Intermediate, or Cantilever Supports													
Depth	**Clear Spans**	**Maximum Round Hole Dimension (See notes on conversion to rectangular holes.)**													
		2"	**3"**	**4"**	**5"**	**6"**	**6½"**	**7"**	**8"**	**8⁷/₈"**	**9'**	**10'**	**11"**	**12"**	**13"**
9 ½" (GPI 20 & GPI 40 only.)	**10'**	0'-6'	0'-6'	0'-9"	1'-9"	2'-9"	3'-6"	**N/A**	**N/A**	**N/A**	**N/A**	**N/A**	**N/A**	**N/A**	**N/A**
	12'	0'-6'	1'-0"	2'-0"	3'-0"	4'-3"	4'-9"	**N/A**	**N/A**	**N/A**	**N/A**	**N/A**	**N/A**	**N/A**	**N/A**
	14'	1'-0"	2'-0"	3'-0"	4'-3"	5'-6"	6'-0"	**N/A**	**N/A**	**N/A**	**N/A**	**N/A**	**N/A**	**N/A**	**N/A**
	16'	0'-6'	0'-6'	1'-9"	3'-6"	5'-0"	6'-0"	**N/A**	**N/A**	**N/A**	**N/A**	**N/A**	**N/A**	**N/A**	**N/A**
	18'	0'-6'	0'-6'	0'-9"	2'-3"	4'-6"	5'-6"	**N/A**	**N/A**	**N/A**	**N/A**	**N/A**	**N/A**	**N/A**	**N/A**
11⁷/₈"	**10'**	0'-6'	0'-6'	0'-9"	1'-0"	1'-0"	1'-0"	1'-3"	2'-3"	3'-3"	**N/A**	**N/A**	**N/A**	**N/A**	**N/A**
	12'	0'-6'	0'-6'	0'-9"	1'-0"	1'-6"	2'-0"	2'-6"	3'-9"	4'-9"	**N/A**	**N/A**	**N/A**	**N/A**	**N/A**
	14'	0'-6'	0'-6'	0'-9"	1'-9"	2'-9"	3'-6"	4'-0"	5'-0"	6'-3"	**N/A**	**N/A**	**N/A**	**N/A**	**N/A**
	16'	0'-6'	1'-0"	2'-0"	3'-0"	4'-0"	4'-9"	5'-3"	6'-6"	7'-6"	**N/A**	**N/A**	**N/A**	**N/A**	**N/A**
	18'	0'-6'	0'-6'	1'-3"	2'-6"	4'-0"	4'-9"	5'-6"	7'-0"	8'-6"	**N/A**	**N/A**	**N/A**	**N/A**	**N/A**
	20'	0'-6'	1'-3"	2'-6"	4'-0"	5'-3"	6'0"	6'-9"	8'-6"	**N/A**	**N/A**	**N/A**	**N/A**	**N/A**	**N/A**
	22'	0'-6'	0'-6'	1'-3"	3'-0"	4'-6"	5'-6"	6'-3"	8'-3"	10'-0"	**N/A**	**N/A**	**N/A**	**N/A**	**N/A**
	24'	0'-6'	0'-6'	0'-9"	1'-0"	2'-6"	3'-9"	4'-9"	7'-3"	9'-3"	**N/A**	**N/A**	**N/A**	**N/A**	**N/A**

N/A means Not Allowed or Not Applicable. Source: Wood I-Beam Joists, Engineered Lumber Residential Guide, Georgia Pacific Wood Products, 8/2008.

Note: Flange widths differ between GPI models. GPI 20 is 1¾", GPL 40 is 2 ⁵⁄₁₆", and GPI 65 is 2 ⁷⁄₁₆" .

Hole locations are based on worst case of simple and multiple spans with uniform floor loads of 40 PSF and live loads up to 20 PSF.

PSF = pounds per square foot.

For any condition not specifically noted, contact manufacturer or a registered design professional (RDP) for individual case analysis.

Min distances from **nearest edge of round hole** to nearest bearing face.															
I-Joist Dimensions		**GPI 20, 40, and 65 I-Joists with LVL flanges.**													
		Distance From End, Intermediate, or Cantilever Supports													
Depth	**Clear Spans**	**Maximum Round Hole Dimension (See notes on conversion to rectangular holes.)**													
		2"	**3"**	**4"**	**5"**	**6"**	**6½"**	**7"**	**8"**	**8 7/8"**	**9'**	**10'**	**11"**	**12"**	**13"**
14"	**12'**	0'-6'	0'-6'	0'-9"	1'-0"	1'-0"	1'-0"	1'-0"	1'-3"	2'-3"	2'-3"	3'-6"	4'-6"	**N/A**	**N/A**
	14'	0'-6'	0'-6'	0'-9"	1'-0"	1'-0"	1'-0"	1'-6"	2'-6"	3'-6"	3'-9"	4'-9"	6'-0"	**N/A**	**N/A**
	16'	0'-6'	0'-6'	0'-9"	1'-0"	1'-9"	2'-3"	2'-9"	4'-0"	5'-0"	5'-0"	6'-3"	7'-6"	**N/A**	**N/A**
	18'	0'-6'	0'-6'	0'-9"	1'-0"	1'-6"	2'-0"	2'-9"	4'-0"	5'-3"	5'-3"	6'-9"	8'-6"	**N/A**	**N/A**
	20'	0'-6'	0'-6'	0'-9"	1'-3"	2'-6"	3'-3"	3'-9"	5'-3"	6'-6"	6'-9"	8'-3"	**N/A**	**N/A**	**N/A**
	22'	0'-6'	0'-6'	0'-9"	1'-0"	1'-3"	2'-0"	2'-9"	4'-6"	6'-0"	6'-3"	8'-0"	10'-3"	**N/A**	**N/A**
	24'	0'-6'	0'-6'	0'-9"	1'-0"	2'-6"	3'-3"	4'-3"	5'-9"	7'-6"	7'-9"	9'-9"	**N/A**	**N/A**	**N/A**
	26'	0'-6'	0'-6'	0'-9"	1'-0"	1'-3"	2'-3"	3'-3"	5'-0"	7'-0"	7'-3"	9'-6"	12'-0"	**N/A**	**N/A**
	28'	0'-6'	0'-6'	0'-9"	1'-0"	1'-0"	1'-9"	3'-0"	5'-0"	7'-0"	7'-3"	9'-9"	12'-3"	**N/A**	**N/A**
16" (GPI 65 only.)	**14'**	0'-6'	0'-6'	0'-9"	1'-0"	1'-0"	1'-0"	1'-0"	1'-0"	1'-0"	1'-3"	2'-3"	3'-6"	4'-6"	6'-0"
	16'	0'-6'	0'-6'	0'-9"	1'-0"	1'-0"	1'-0"	1'-0"	1'-6"	2'-6"	2'-6"	3'-9"	4'-9"	6'-0"	7'-3"
	18'	0'-6'	0'-6'	0'-9"	1'-0"	1'-0"	1'-0"	1'-0"	1'-0"	2'-3"	2'-3"	3'-9"	5'-0"	6'-6"	8'-3"
	20'	0'-6'	0'-6'	0'-9"	1'-0"	1'-0"	1'-0"	1'-0"	2'-3"	3'-6"	3'-9"	5'-0"	6'-6"	8'-3"	**N/A**
	22'	0'-6'	0'-6'	0'-9"	1'-0"	1'-0"	1'-0"	1'-0"	1'-0"	2'-6"	2'-9"	4'-3"	6'-0"	8'-0"	10'-0"
	24'	0'-6'	0'-6'	0'-9"	1'-0"	1'-0"	1'-0"	1'-0"	2'-3"	3'-9"	4'-0"	5'-9"	7'-6"	9'-6"	**N/A**
	26'	0'-6'	0'-6'	0'-9"	1'-0"	1'-0"	1'-0"	1'-0"	1'-0"	2'-9"	3'-0"	5'-0"	7'-0"	9'-3"	11'-9"
	28'	0'-6'	0'-6'	0'-9"	1'-0"	1'-0"	1'-0"	1'-0"	2'-3"	4'-0"	4'-3"	6'-3"	8'-6"	10'-9"	**N/A**
	30'	0'-6'	0'-6'	0'-9"	1'-0"	1'-0"	1'-0"	1'-0"	2'-0"	3'-9"	4'-0"	6'-3"	8'-6"	11'-0"	13'-9"

N/A means Not Allowed or Not Applicable. Source: Wood I-Beam Joists, Engineered Lumber Residential Guide, Georgia Pacific Wood Products, 8/2008.

Note: Flange widths differ between GPI models. GPI 20 is 1¾", GPL 40 is 2 5/16", and GPI 65 is 2 7/16" .

Hole locations are based on worst case of simple and multiple spans with uniform floor loads of 40 PSF and live loads up to 20 PSF.

PSF = pounds per square foot.

For any condition not specifically noted, contact manufacturer or a registered design professional (RDP) for individual case analysis.

Louisiana Pacific SolidStart® I-Joist Basics

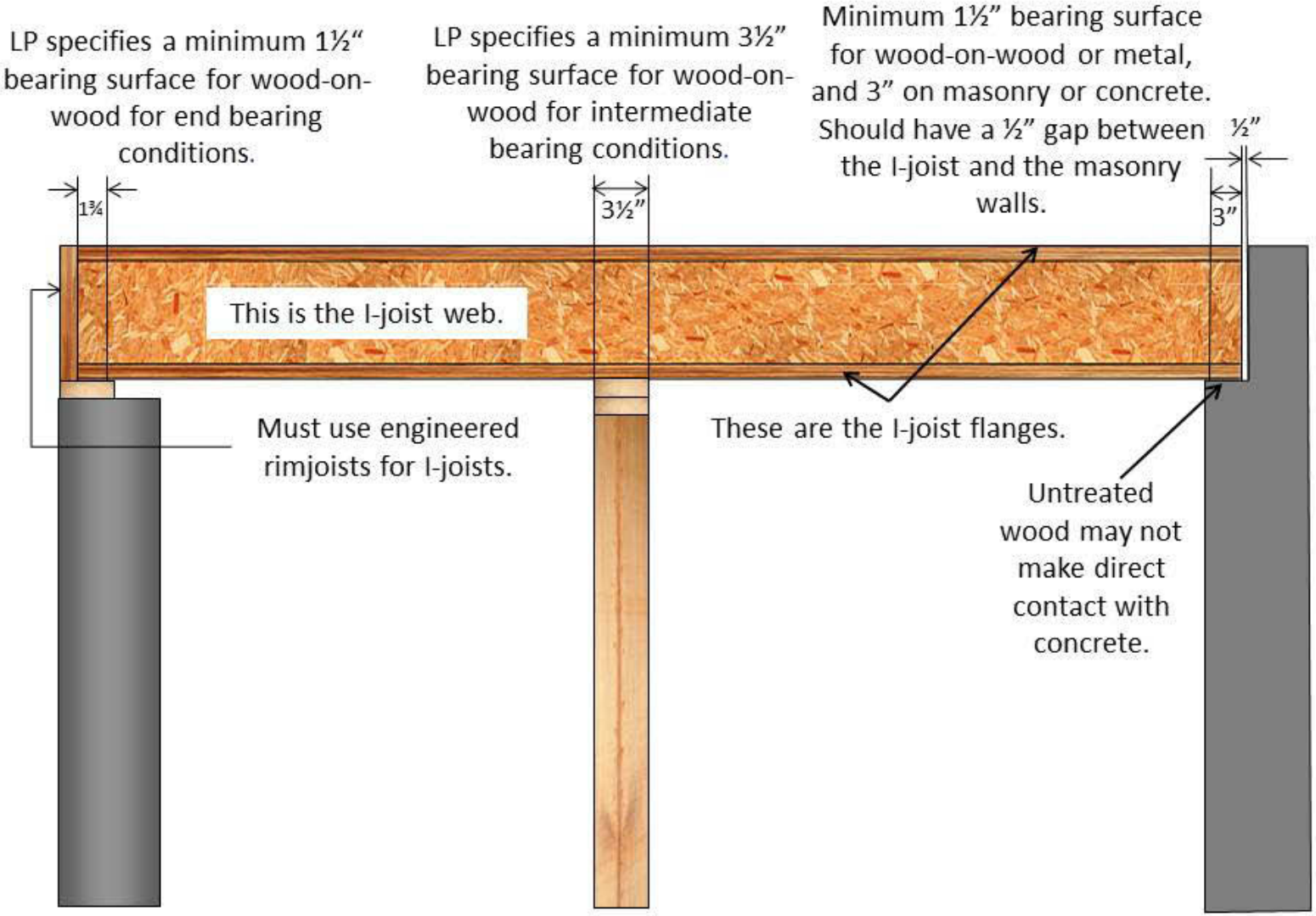

Source: Louisiana Pacific (2008). *LP Solid Start Engineered Wood Products LP Solid Start I-Joists.*

Louisiana Pacific SolidStart® I-Joist Basics

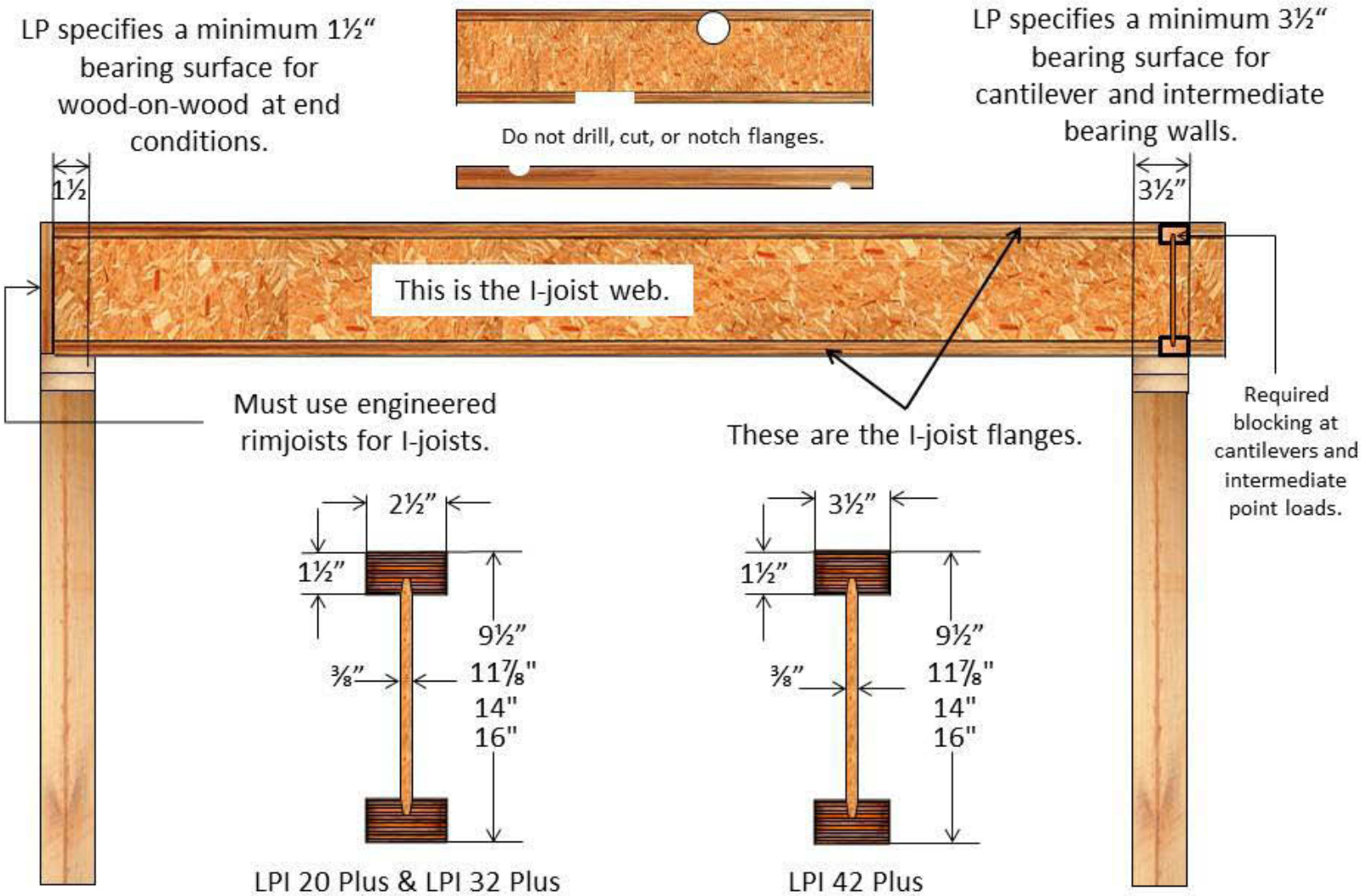

Source: Louisiana Pacific (2008). *LP Solid Start Engineered Wood Products LP Solid Start I-Joists.*

LP SolidStart® I-Joist Round Hole Chart

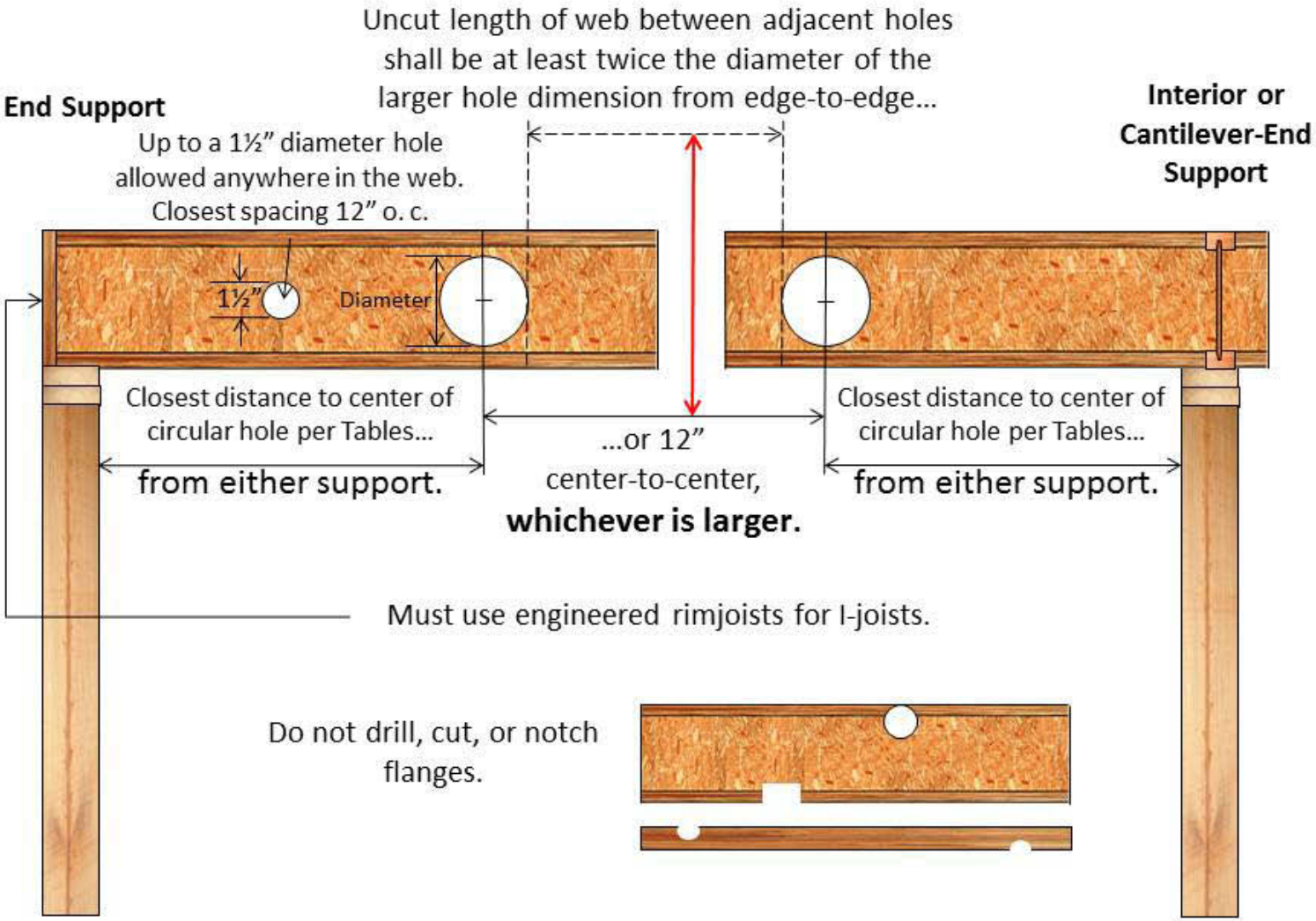

Source: Louisiana Pacific (2008). *LP Solid Start Engineered Wood Products LP Solid Start I-Joists.*

LP SolidStart® I-Joist Rectangular Hole Chart

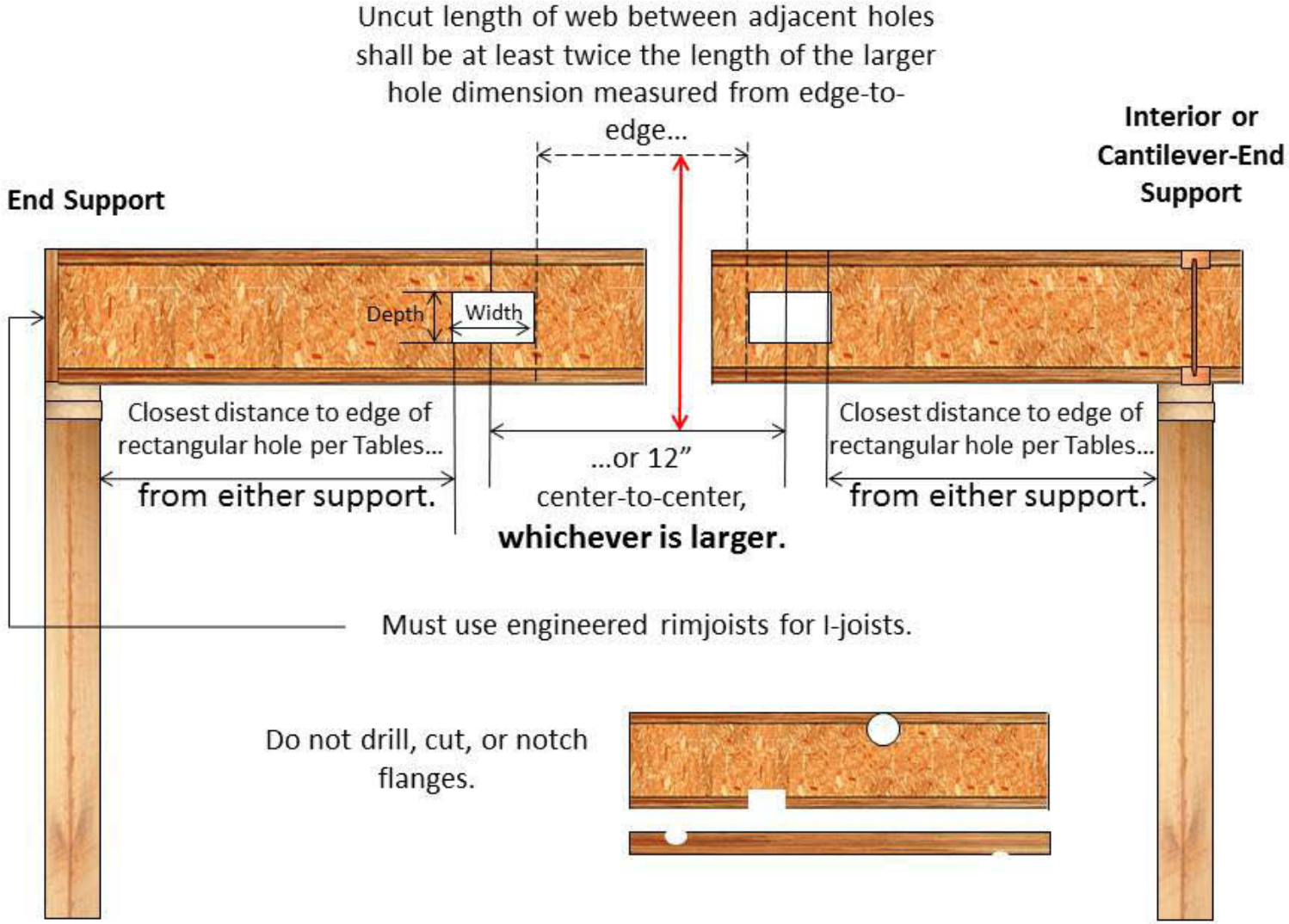

Source: Louisiana Pacific (2008). *LP Solid Start Engineered Wood Products LP Solid Start I-Joists.*

LP SolidStart® I-Joist Installation Errors

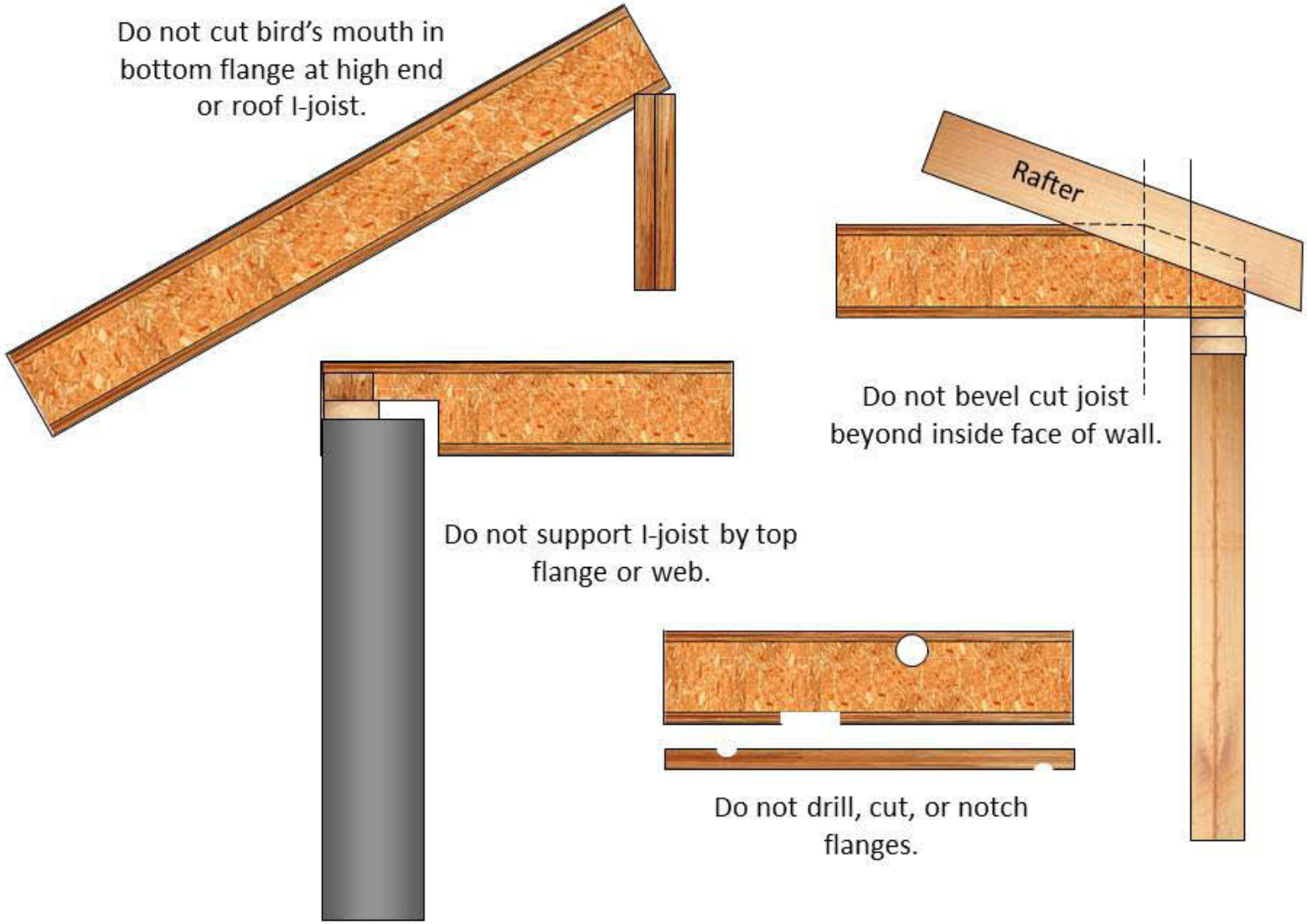

Selected Hanger Models: Louisiana Pacific (LP) Models LPI 20 Plus, 32 Plus, & 42 Plus I-Joist Series							
Single Joist Hangers: Simpson Strong-Tie (SST)							
Joist Series	Joist Depth	Face Mount	Nailing		Top Mount	Nailing	
			Header	Joist		Header	Joist
LPI 20 Plus	9½"	IUT310	10d	10d X 1½"	ITT39.5	10d	10d X 1½"
	11⅞"	IUT312	10d	10d X 1½"	ITT311.88	10d	10d X 1½"
	14"	IUT314	10d	10d X 1½"	ITT314	10d	10d X 1½"
LPI 32 Plus	9½"	IUT 310	10d	10d X 1½"	ITT39.5	10d	10d X 1½"
	11⅞"	IUT 312	10d	10d X 1½"	ITT311.88	10d	10d X 1½"
	14"	IUT 314	10d	10d X 1½"	ITT314	10d	10d X 1½"
	16"	IUT316	10d	10d X 1½"	ITT316	10d	10d X 1½"
LPI 42 Plus	9½"	IUS3.56/9.5	10d	10d X 1½"	ITT49.5	10d	10d X 1½"
	11⅞"	IUS3.56/11.88	10d	10d X 1½"	ITT411.88	10d	10d X 1½"
	14"	IUS3.56/14	10d	10d X 1½"	ITT414	10d	10d X 1½"
	16"	IUS3.56/16	10d	10d X 1½"	ITT416	10d	10d X 1½"
16d nails = 0.162" dia. X 3½" long. 10d nails = 0.148" dia. X 3" long. 10d X 1½" nails = 0.148" dia. X 1½" long.							
Louisiana Pacific (LP) Models LPI 20 Plus, 32 Plus, & 42 Plus I-Joist Series							
Double Joist Hangers: Simpson Strong-Tie (SST)							
Joist Series	Joist Depth	Face Mount	Nailing		Top Mount	Nailing	
			Header	Joist		Header	Joist
LPI 20 Plus	9½"	***HU310-2****	16d	10d	MIT39.5-2	10d	10d X 1½"
	11⅞"	***HU312-2****	16d	10d	MIT311.88-2	10d	10d X 1½"
	14"	***HU314-2****	16d	10d	MIT314-2	10d	10d X 1½"
LPI 32 Plus	9½"	***HU310-2****	16d	10d	MIT39.5-2	10d	10d X 1½"
	11⅞"	***HU312-2****	16d	10d	MIT311.88-2	10d	10d X 1½"
	14"	***HU314-2****	16d	10d	MIT14-2	10d	10d X 1½"
	16"	***HU316-2****	16d	10d	***WPI316-2****	10d	10d X 1½"
LPI 42 Plus	9½"	***HU410-2****	16d	10d	B7.12/9.5	16d	10d X 1½"
	11⅞"	***HU412-2****	16d	10d	B7.12/11.88	16d	10d X 1½"
	14"	***HU414-2****	16d	10d	B7.12/14	16d	10d X 1½"
	16"	***HU414-2****	16d	10d	B7.12/16	16d	10d X 1½"
* Asterisk items require web fillers. ** Double asterisk means hanger is < 60% of joist height, and needs additional rotation resistance.							
Source: LPEW0124 08/08 15M MW; Simpson Strong-Tie Wood Construction Connectors 2009-2010.							

Selected Hanger Models: Louisiana Pacific (LP) Models LPI 20 Plus, 32 Plus, & 42 Plus I-Joist Series							
Single Joist Hangers: United Steel Products (USP)							
Joist Series	Joist Depth	Face Mount	Nailing		Top Mount	Nailing	
			Header	Joist		Header	Joist
LPI 20 Plus	9½"	THF26925	10d	10d X 1½"	THO25950	10d	10d X 1½"
	11⅞"	THF26112	10d	10d X 1½"	THO25118	10d	10d X 1½"
	14"	THF26140	10d	10d X 1½"	THO25140	10d	10d X 1½"
LPI 32 Plus	9½"	THF26925	10d	10d X 1½"	THO25950	10d	10d X 1½"
	11⅞"	THF26112	10d	10d X 1½"	THO25118	10d	10d X 1½"
	14"	THF26140	10d	10d X 1½"	THO25140	10d	10d X 1½"
	16"	THF26160	10d	10d X 1½"	THO25160	10d	10d X 1½"
LPI 42 Plus	9½"	THF35925	10d	10d X 1½"	THO35950	10d	10d X 1½"
	11⅞"	THF35112	10d	10d X 1½"	THO35118	10d	10d X 1½"
	14"	THF35140	10d	10d X 1½"	THO35140	10d	10d X 1½"
	16"	THF35157	10d	10d X 1½"	THO35160	10d	10d X 1½"
16d nails = 0.162" dia. X 3½" long. 10d nails = 0.148" dia. X 3" long. 10d X 1½" nails = 0.148" dia. X 1½" long.							
Louisiana Pacific (LP) Models LPI 20 Plus, 32 Plus, & 42 Plus I-Joist Series							
Double Joist Hangers: United Steel Products (USP)							
Joist Series	Joist Depth	Face Mount	Nailing		Top Mount	Nailing	
			Header	Joist		Header	Joist
LPI 20 Plus	9½"	*THF25925-2**	10d	10d	*THO25950-2**	16d	10d
	11⅞"	*THF25112-2**	10d	10d	*THO25118-2**	16d	10d
	14"	*THF25140-2**	10d	10d	*THO25140-2**	16d	10d
LPI 32 Plus	9½"	*THF25925-2**	10d	10d	*THO25950-2**	16d	10d
	11⅞"	*THF25112-2**	10d	10d	*THO25118-2**	16d	10d
	14"	*THF25140-2**	10d	10d	*THO25140-2**	16d	10d
	16"	*THF25160-2**	10d	10d	*THO25160-2**	16d	10d
LPI 42 Plus	9½"	*HD7100**	10d	10d	*BPH7195**	16d	10d
	11⅞"	*HD7120**	10d	10d	*BPH71118**	16d	10d
	14"	*HD7140**	10d	10d	*BPH7114**	16d	10d
	16"	*HD7160**	10d	10d	*BPH7116**	16d	10d
* Asterisk items require web fillers. ** Double asterisk means hanger is < 60% of joist height, and needs additional rotation resistance.							
Source: LPEW0124 08/08 15M MW; USP Product Guide USP972-051 2005.							

Louisiana Pacific (LP) Models LPI 20 Plus, 32 Plus, & 42 Plus I-Joist Series				
Variable Slope Seat Connectors: Simpson Strong-Tie (SST)				
Joist Series	Joist Depth	Seat Model #	Nailing	
			Header	Joist
LPI 20 Plus	9½"	VPA3	10d	10d X 1½"
	11⅞"		10d	10d X 1½"
	14"		10d	10d X 1½"
LPI 32 Plus	9½"	VPA3	10d	10d X 1½"
	11⅞"		10d	10d X 1½"
	14"		10d	10d X 1½"
	16"		10d	10d X 1½"
LPI 42 Plus	9½"	VPA4	10d	10d X 1½"
	11⅞"		10d	10d X 1½"
	14"		10d	10d X 1½"
	16"		10d	10d X 1½"

Louisiana Pacific (LP) Models LPI 20 Plus, 32 Plus, & 42 Plus				
Face Mount Skewed 45° Joist Hanger: Simpson Strong-Tie				
Joist Series	Joist Depth	Model #	Nailing	
			Header	Joist
LPI 20 Plus	9½"	*SUR/L310**	16d	16d
	11⅞"	*SUR/L310**	16d	16d
	14"	*SUR/L314**	16d	16d
LPI 32 Plus	9½"	*SUR/L310**	16d	16d
	11⅞"	*SUR/L310**	16d	16d
	14"	*SUR/L314**	16d	16d
	16"	*SUR/L314**	16d	16d
LPI 42 Plus	9½"	*SUR/L410**	16d	16d
	11⅞"	*SUR/L410**	16d	16d
	14"	*SUR/L414**	16d	16d
	16"	*SUR/L414**	16d	16d

16d nails = 0.162" dia. X 3½" long. 10d nails = 0.148" dia. X 3" long. 10d X 1½" nails = 0.148" dia. X 1½" long.

Louisiana Pacific (LP) Models LPI 20 Plus, 32 Plus, & 42 Plus I-Joist Series				
Variable Slope & Skew Seat Hanger: Simpson Strong-Tie (SST)				
Joist Series	Joist Depth	Face Mount Only	Nailing	
			Header	Joist
LPI 20 Plus	9½"	*LSSUH310**	16d	10d X 1½"
	11⅞"	*LSSUH310**	16d	10d X 1½"
	14"	*LSSUH310**	16d	10d X 1½"
LPI 32 Plus	9½"	*LSSUH310**	16d	10d X 1½"
	11⅞"	*LSSUH310**	16d	10d X 1½"
	14"	*LSSUH310**	16d	10d X 1½"
	16"	*LSSUH310** **	16d	10d X 1½"
LPI 42 Plus	9½"	*LSSUH410**	16d	10d X 1½"
	11⅞"	*LSSUH410**	16d	10d X 1½"
	14"	*LSSUH410**	16d	10d X 1½"
	16"	N/A	16d	10d X 1½"

* Asterisk items require web fillers. ** Double asterisk means hanger is < 60% of joist height, and needs additional rotation resistance.

Source: LPEW0124 08/08 15M MW; Simpson Strong-Tie Wood Construction Connectors 2009-2010.

Louisiana Pacific (LP) Models LPI 20 Plus, 32 Plus, & 42 Plus I-Joist Series				
Variable Slope Seat Connectors: United Steel Products (USP)				
Joist Series	Joist Depth	Seat Model #	Nailing	
			Header	Joist
LPI 20 Plus	9½"	*TMP25/TMPH25**	10d	10d X 1½"
	11⅞"	*TMP25/TMPH25**	10d	10d X 1½"
	14"	*TMP25/TMPH25**	10d	10d X 1½"
LPI 32 Plus	9½"	*TMP25/TMPH25**	10d	10d X 1½"
	11⅞"	*TMP25/TMPH25**	10d	10d X 1½"
	14"	*TMP25/TMPH25**	10d	10d X 1½"
	16"	*TMP25/TMPH25**	10d	10d X 1½"
LPI 42 Plus	9½"	*TMP4/TMP4**	10d	10d X 1½"
	11⅞"	*TMP4/TMP4**	10d	10d X 1½"
	14"	*TMP4/TMP4**	10d	10d X 1½"
	16"	*TMP4/TMP4**	10d	10d X 1½"

Louisiana Pacific (LP) Models LPI 20 Plus, 32 Plus, & 42 Plus				
Face Mount Skewed 45° Joist Hanger: United Steel Products				
Joist Series	Joist Depth	Model #	Nailing	
			Header	Joist
LPI 20 Plus	9½"	*SKH2520R/L**	16d	16d
	11⅞"	*SKH2520R/L**	16d	16d
	14"	*SKH2524R/L**	16d	16d
LPI 32 Plus	9½"	*SKH2520R/L**	16d	16d
	11⅞"	*SKH2520R/L**	16d	16d
	14"	*SKH2524R/L**	16d	16d
	16"	*SKH2524R/L**	16d	16d
LPI 42 Plus	9½"	*SKH410R/L**	16d	16d
	11⅞"	*SKH410R/L**	16d	16d
	14"	*SKH414R/L**	16d	16d
	16"	*SKH414R/L**	16d	16d

16d nails = 0.162" dia. X 3½" long. 10d nails = 0.148" dia. X 3" long. 10d X 1½" nails = 0.148" dia. X 1½" long.

Louisiana Pacific (LP) Models LPI 20 Plus, 32 Plus, & 42 Plus I-Joist Series				
Variable Slope & Skew Seat Hanger: United Steel Products (USP)				
Joist Series	Joist Depth	Face Mount Only	Nailing	
			Header	Joist
LPI 20 Plus	9½"	*LSSH25**	16d	10d X 1½"
	11⅞"	*LSSH25**	16d	10d X 1½"
	14"	*LSSH25**	16d	10d X 1½"
LPI 32 Plus	9½"	*LSSH25**	16d	10d X 1½"
	11⅞"	*LSSH25**	16d	10d X 1½"
	14"	*LSSH25**	16d	10d X 1½"
	16"	*LSSH25**	16d	10d X 1½"
LPI 42 Plus	9½"	*LSSH35**	16d	10d X 1½"
	11⅞"	*LSSH35**	16d	10d X 1½"
	14"	*LSSH35**	16d	10d X 1½"
	16"	*LSSH35**	16d	10d X 1½"

* Asterisk items require web fillers. ** Double asterisk means hanger is < 60% of joist height, and needs additional rotation resistance.

Source: LPEW0124 08/08 15M MW; USP Product Guide USP972-051 2005.

LPI Roof Span Tables

Low Slope ≤ 6:12		Louisiana Pacific LPI I-Joist Roof Span Tables							
		Series	Depth	16" o.c.		19.2" o.c.		24" o.c.	
		Roof Dead Load →		15 PSF	20 PSF	15 PSF	20 PSF	15 PSF	20 PSF
Roof Live Load	20 PSF 125% Non-Snow	LPI 20 Plus	9½"	21'-1"	20'-1"	19'-10"	18'-10"	18'-4"	17'-5"
			11⁷/₈"	25'-4"	24'-1"	23'-9"	22'-7"	22'-0"	20'-10"
			14"	28'-11"	27'-7"	27'-1"	25'-3"	24'-3"	22'-7"
		LPI 32 Plus	9½"	22'-10"	21'-9"	21'-5"	20'-4"	19'-9"	18'-10"
			11⁷/₈"	27'-2"	25'-10"	25'-6"	24'-3"	23'-7"	22'-5"
			14"	30'-10"	29'-4"	28'-11"	27'-6"	26'-9"	25'-5"
			16"	34'-1"	32'-5"	31'-11"	30'-5"	29'-6"	27'-7"
		LPI 42 Plus	9½"	25'-7"	24'-5"	24'-1"	22'-11"	22'-3"	21'-2"
			11⁷/₈"	30'-7"	29'-1"	28'-8"	27'-4"	26'-7"	25'-4"
			14"	34'-8"	33'-1"	32'-7"	31'-1"	30'-2"	28'-9"
			16"	38'-5"	36'-8"	36'-1"	34'-5"	33'-5"	31'-10
Roof Live Load	25 PSF 115% Snow	LPI 20 Plus	9½"	20'-2"	19'-4"	18'-11"	18'-2"	17'-4"	16'-3"
			11⁷/₈"	24'-3"	23'-2"	22'-6"	21'-1"	20'-1"	18'-10"
			14"	26'-9"	25'-1"	24'-4"	22'-11"	21'-9"	20'-5"
		LPI 32 Plus	9½"	21'-10"	20'-11"	20'-6"	19'-7"	18'-11"	18'-1"
			11⁷/₈"	26'-0"	24'-10"	24'-4"	23'-4"	22'-6"	21'-1"
			14"	29'-6"	28'-2"	27'-8"	25'-11"	24'-8"	23'-2"
			16"	32'-7"	30'-8"	29'-9"	27'-11"	26'-7"	23'-10"
		LPI 42 Plus	9½"	24'-6"	23'-6"	23'-0"	22'-0"	21'-4"	20'-5"
			11⁷/₈"	29'-3"	28'-0"	27'-6"	26'-4"	25'-5"	24'-4"
			14"	33'-3"	31'-10"	31'-2"	29'-10"	28'-11"	27'-8"
			16"	36'-10"	35'-3"	34'-7"	33'-1"	32'-0"	30'-6"

Source: LPEW0124 08/08 15M MW
Spans are the horixontal distance between supports & valid for simple or continuous spans.
Continuous spans are based on the longest span. Short span shall not be < 50% of long span.
Spans are based on uniform gravity loads only.
Values do not reflect additional stiffness provided by roof sheathing.
Live load deflection is limited to L/240. Total load deflection is limited to /180.
Roof joists shall have a minimum slope of ¼" per foot (¼":12) for positive drainage.
Spans are based on an end bearing length of 1¾" and ≥ 3½" for interior bearing.
Limited to the bearing capacity of an SPF wall.
Web stiffeners not needed except for "bird's mouth" cuts for low-end bearing.
Web fillers are required for hangers that do not provide lateral support to the top flanges or for hangers that require nailing into the web

LPI Roof Span Tables

High Slope 6:12 - 12:12		Louisiana Pacific LPI I-Joist Roof Span Tables							
		Series	Depth	16" o.c.		19.2" o.c.		24" o.c.	
		Roof Dead Load →		15 PSF	20 PSF	15 PSF	20 PSF	15 PSF	20 PSF
Roof Live Load	20 PSF 125% Non-Snow	LPI 20 Plus	9½"	18'-10"	17'-10"	17'-8"	16'-9"	16'-5"	15'-6"
			11⁷/₈"	22'-7"	21'-5"	21'-3"	20'-1"	19'-8"	18'-7"
			14"	25'-10"	24'-6"	24'-3"	23'-0"	22'-6"	21'-2"
		LPI 32 Plus	9½"	20'-5"	19'-4"	19'-2"	18'-2"	17'-9"	16'-9"
			11⁷/₈"	24'-4"	23'-0"	22'-10"	21'-7"	21'-1"	20'-0"
			14"	27'-7"	26'-1"	25'-11"	24'-6"	23'-11"	22'-8"
			16"	30'-5"	28'-10"	28'-7"	27'-1"	26'-5"	25'-0"
		LPI 42 Plus	9½"	22'-10"	21'-8"	21'-6"	20'-4"	19'-11"	18'-10"
			11⁷/₈"	27'-3"	25'-10"	25'-8"	24'-3"	23'-9"	22'-6"
			14"	31'-0"	29'-4"	29'-1"	27'-7"	26'-11"	25'-6"
			16"	34'-4"	32'-6"	32'-3"	30'-7"	29'-11"	28'-4"
Roof Live Load	25 PSF 115% Snow	LPI 20 Plus	9½"	18'-1"	17'-3"	17'-0"	16'-2"	15'-9"	15'-0"
			11⁷/₈"	21'-9"	20'-8"	20'-5"	19'-5"	18'-11"	17'-10"
			14"	24'-10"	23'-8"	23'-2"	21'-7"	20'-9"	19'-4"
		LPI 32 Plus	9½"	19'-8"	18'-8"	18'-5"	17'-6"	17'-0"	16'-2"
			11⁷/₈"	23'-4"	22'-3"	21'-11"	20'-10"	20'-3"	19'-3"
			14"	26'-6"	25'-3"	24'-10"	23'-8"	23'-0"	21'-1"
			16"	29'-3"	27'-10"	27'-6"	26'-2"	24'-6"	21'-3"
		LPI 42 Plus	9½"	22'-0"	20'-11"	20'-8"	19'-8"	19'-1"	18'-2"
			11⁷/₈"	26'-3"	25'-0"	24'-8"	23'-6"	22'-10"	21'-9"
			14"	29'-9"	28'-4"	28'-0"	26'-8"	25'-11"	24'-8"
			16"	33'-0"	31'-5"	31'-0"	29'-6"	28'-9"	27'-4"

Source: LPEW0124 08/08 15M MW
Spans are the horixontal distance between supports & valid for simple or continuous spans.
Continuous spans are based on the longest span. Short span shall not be < 50% of long span.
Spans are based on uniform gravity loads only.
Values do not reflect additional stiffness provided by roof sheathing.
Live load deflection is limited to L/240. Total load deflection is limited to /180.
Roof joists shall have a minimum slope of ¼" per foot (¼":12) for positive drainage.
Spans are based on an end bearing length of 1¾" and ≥ 3½" for interior bearing.
Limited to the bearing capacity of an SPF wall.
Web stiffeners not needed except for "bird's mouth" cuts for low-end bearing.
Web fillers are required for hangers that do not provide lateral support to the top flanges or for hangers that require nailing into the web
PSF = pounds per square foot.

Louisiana Pacific Solid Start Floor I-Joist Simple Span Table

40 PSF live load, 10 PSF dead load, (12 PSF for the LPI 42 Plus).

Joist Series	Depth	L/480 Live Load Deflection				L/360 Live Load Deflection			
		12" o.c.	16" o.c.	19.2" o.c.	24" o.c.	12" o.c.	16" o.c.	19.2" o.c.	24" o.c.
LPI 20 Plus	9½"	17'-9"	16'-2"	15'-3"	14'-3"	19'-7"	17'-11"	16'-7"	14'-10"
	11⁷/₈"	21'-2"	19'-4"	18'-3"	17'-0"	23'-5"	21'-1"	19'-3"	17'-2"
	14"	24'-1"	22'-0"	20'-9"	18'-7"	26'-4"	22'-10"	20'-10"	18'-7"
LPI 32 Plus	9½"	18'-9"	17'-0"	16'-0"	14'-9"	20'-10"	18'-11"	17'-10"	16'-6"
	11⁷/₈"	22'-3"	20'-2"	19'-0"	17'-7"	24'-9"	22'-6"	21'-2"	19'-2"
	14"	25'-2"	22'-10"	21'-6"	19'-6"	28'-0"	25'-5"	23'-7"	19'-6"
	16"	27'-10"	25'-3"	23'-9"	19'-7"	30'-11"	27'-10"	24'-6"	19'-7"
LPI 42 plus	9½"	21'-1"	19'-3"	18'-2"	16'-11"	23'-4"	21'-4"	20'-1"	18'-9"
	11⁷/₈"	25'-1"	22'-10"	21'-7"	20'-1"	27'-9"	25'-4"	23'-11"	22'-3"
	14"	28'-5"	25'-11"	24'-5"	22'-9"	31'-5"	28'-8"	27'-1"	24'-10"
	16"	31'-6"	28'-8"	27'-1"	24'-10"	34'-10"	31'-9"	29'-11"	24'-10"

Source: LPEW0124 08/08 15M MW

40 PSF live load, 15 PSF dead load.

Joist Series	Depth	L/480				L/360			
		12" o.c.	16" o.c.	19.2" o.c.	24" o.c.	12" o.c.	16" o.c.	19.2" o.c.	24" o.c.
LPI 20 Plus	9½"	17'-9"	16'-2"	15'-3"	14'-2"	19'-7"	17'-4"	15'-10"	14'-2"
	11⁷/₈"	21'-2"	19'-4"	18'-3"	16'-4"	23'-2"	20'-1"	18'-4"	16'-4"
	14"	24'-1"	21'-9"	19'-10"	17'-8"	25'-2"	21'-9"	19'-10"	17'-8"
LPI 32 Plus	9½"	18'-9"	17'-0"	16'-0"	14'-9"	20'-10"	18'-11"	17'-10"	16'-1"
	11⁷/₈"	22'-3"	20'-2"	19'-0"	17'-7"	24'-9"	22'-5"	20'-6"	17'-7"
	14"	25'-2"	22'-10"	21'-6"	17'-8"	28'-0"	24'-8"	22'-2"	17'-8"
	16"	27'-10"	25'-3"	22'-3"	17'-9"	30'-8"	26'-7"	22'-3"	17'-9"
LPI 42 plus	9½"	21'-1"	19'-3"	18'-2"	16'-11"	23'-4"	21'-4"	20'-1"	18'-9"
	11⁷/₈"	25'-1"	22'-10"	21'-7"	20'-1"	27'-9"	25'-4"	23'-11"	22'-3"
	14"	28'-5"	25'-11"	24'-5"	22'-9"	31'-5"	28'-8"	27'-1"	23'-6"
	16"	31'-6"	28'-8"	27'-1"	23'-6"	34'-10"	31'-9"	29'-5"	23'-6"

Simple spans are the clear distance between supports. Spans are based on uniform loading only. Total load is limited to L/240.

Spans are based on an end bearing length of 1¾", and are limited to bearing capacity for an SPF wall plate.

Web stiffeners not required for above tables. Web fillers are required for hangers that do not laterally support the top flange.

Louisiana Pacific Solid Start Floor I-Joist Continuous Span Table

40 PSF live load, 10 PSF dead load, (12 PSF for the LPI 42 Plus).

Joist Series	Depth	Continuous (Multiple) Span without Web Stiffeners				Continuous (Multiple) Span with Web Stiffeners			
		12" o.c.	16" o.c.	19.2" o.c.	24" o.c.	12" o.c.	16" o.c.	19.2" o.c.	24" o.c.
LPI 20 Plus	9½"	19'-4"	17'-7"	16'-6"	14'-9"	N/A	N/A	N/A	N/A
	11⁷/₈"	23'-1"	21'-0"	19'-2"	17'-1"	N/A	N/A	N/A	N/A
	14"	26'-3"	22'-9"	30'-9"	18'-6"	N/A	N/A	N/A	N/A
LPI 32 Plus	9½"	20'-4"	18'-5"	17'-4"	16'-0"	N/A	N/A	N/A	N/A
	11⁷/₈"	24'-2"	21'-11"	20'-7"	17'-7"	N/A	N/A	N/A	19'-0"
	14"	28'-1"	24'-10"	23'-4"	18'-9"	N/A	N/A	N/A	21'-0"
	16"	31'-0"	27'-9"	24'-11"	19'-10"	N/A	N/A	25'-4"	22'-0"
LPI 42 plus	9½"	23'-0"	20'-11"	19'-9"	18'-5"	N/A	N/A	N/A	N/A
	11⁷/₈"	28'-1"	24'-11"	23'-6"	21'-10"	N/A	N/A	N/A	N/A
	14"	31'-10"	29'-0"	27'-4"	23'-10"	N/A	N/A	N/A	24'-9"
	16"	35'-3"	32'-1"	30'-3"	24'-8"	N/A	N/A	N/A	27'-1"

Source: LPEW0124 08/08 15M MW PSF = pounds per square foot.

40 PSF live load, 15 PSF dead load.

Joist Series	Depth	L/480				L/360			
		12" o.c.	16" o.c.	19.2" o.c.	24" o.c.	12" o.c.	16" o.c.	19.2" o.c.	24" o.c.
LPI 20 Plus	9½"	19'-4"	17'-3"	15'-9"	14'-1"	N/A	N/A	N/A	N/A
	11⁷/₈"	23'-1"	20'-0"	18'-3"	15'-11"	N/A	N/A	N/A	16'-3"
	14"	25'-1"	21'-8"	19'-9"	17'-0"	N/A	N/A	N/A	17'-8"
LPI 32 Plus	9½"	20'-4"	18'-5"	17'-4"	14'-8"	N/A	N/A	N/A	16'-0
	11⁷/₈"	24'-2"	21'-11"	20'-0"	15'-11"	N/A	N/A	20'-5	18'-0"
	14"	28'-1"	24'-7"	21'-4"	17'-0"	N/A	N/A	22'-5"	19'-1"
	16"	30'-7"	26'-6"	22'-7"	18'-0"	N/A	N/A	24'-2"	20'-0
LPI 42 plus	9½"	23'-0"	20'-11"	19'-9"	18'-5"	N/A	N/A	N/A	N/A
	11⁷/₈"	28'-1"	24'-11"	23'-6"	21'-8"	N/A	N/A	N/A	21'-10
	14"	31'-10"	29'-0"	27'-4"	22'-6"	N/A	N/A	N/A	24'-5"
	16"	35'-3"	32'-1"	29'-2"	23'-3"	N/A	N/A	29'-6"	26'-4"

Spans are the clear distance between supports. Continuous spans based on longest span. Short span shall not be < 50% of long span.

Spans are based on an end bearing length of 1¾" and are limited to bearing capacity for an SPF wall plate. Assumes proper subfloor.

Values based on uniform loads only. Live load deflection limited to L/480 for continuoous spans, total deflection limited to L/240.

Louisiana Pacific Solid Start® LVL and LSL Headers and Beams

Minimum clearance between holes:
2 X the diameter of the largest hole.

Source: Louisiana Pacific (2010b) LPEW0247.

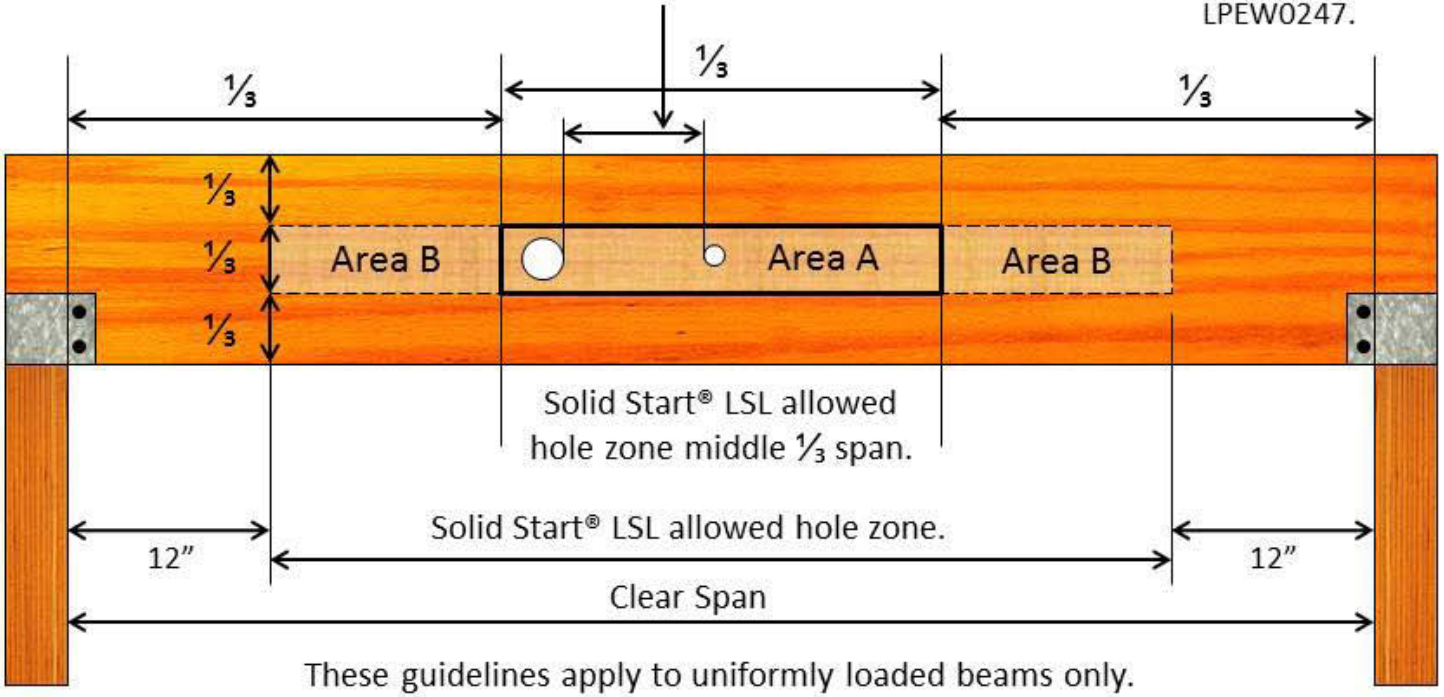

These guidelines apply to uniformly loaded beams only.
Round holes can be drilled anywhere in 'Area A' provided that no more than four holes are cut.
Maximum hole size is 1½" for beam depths of up to 9¼", and 2" for beam depths greater than 9¼".
Rectangular holes are not allowed. Do not drill holes in cantilevers.
Up to three ¾" holes may be drilled in 'Area B' to accommodate wiring and/or water lines.
These holes must be at least 12" apart.
Holes shall be located in the middle third of the depth or a min of 3" from the bottom and top of the beam.
For beams shallower than 9¼", locate holes at mid-depth.
Protect plumbing holes from moisture.

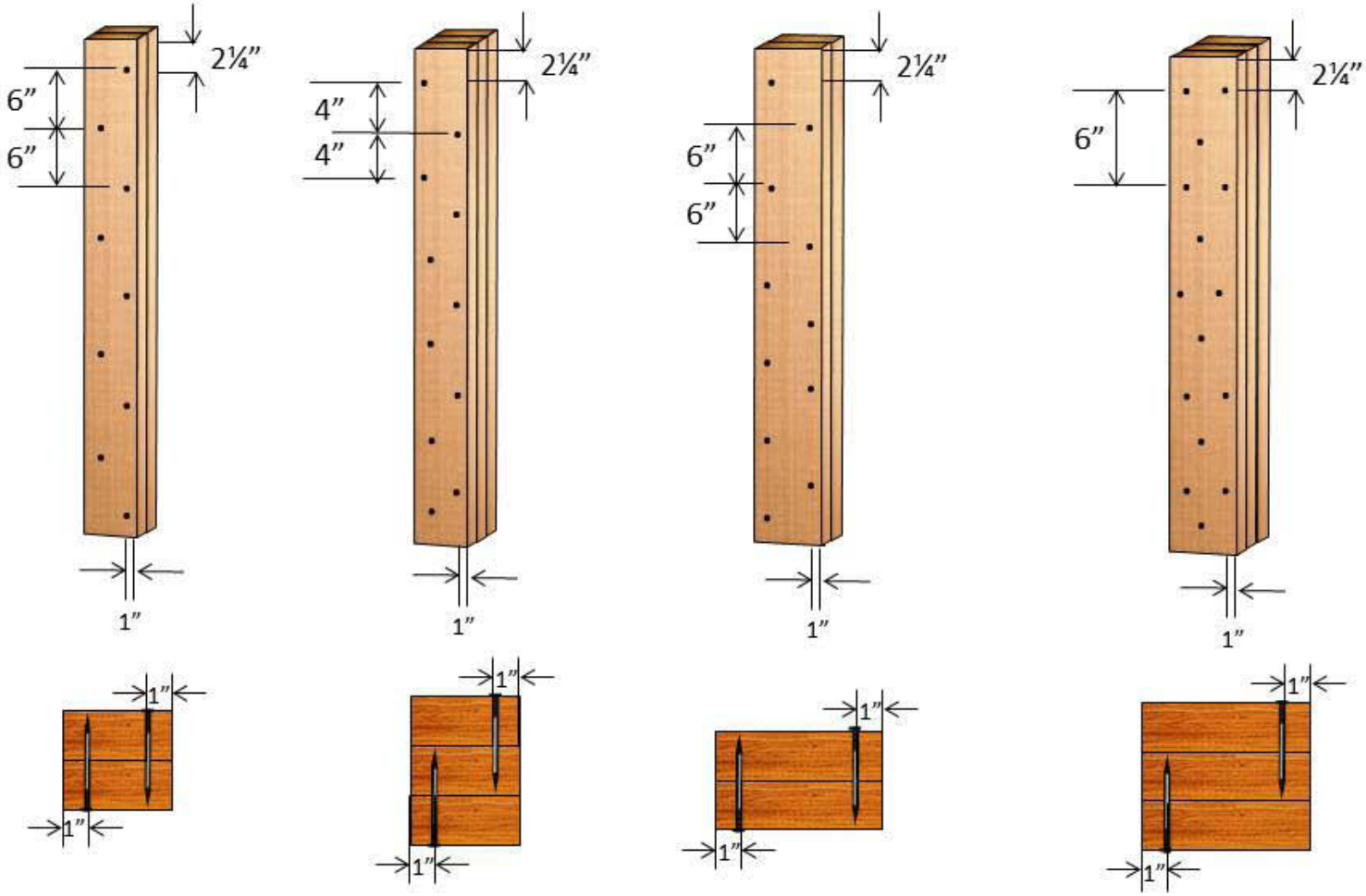
2¼"
6"
6"
1"
1"
1"
2¼"
4"
4"
1"
1"
1"
2¼"
6"
6"
1"
1"
1"
2¼"
6"
1"
1"
1"

Top-Loaded Beam Bolted Connection

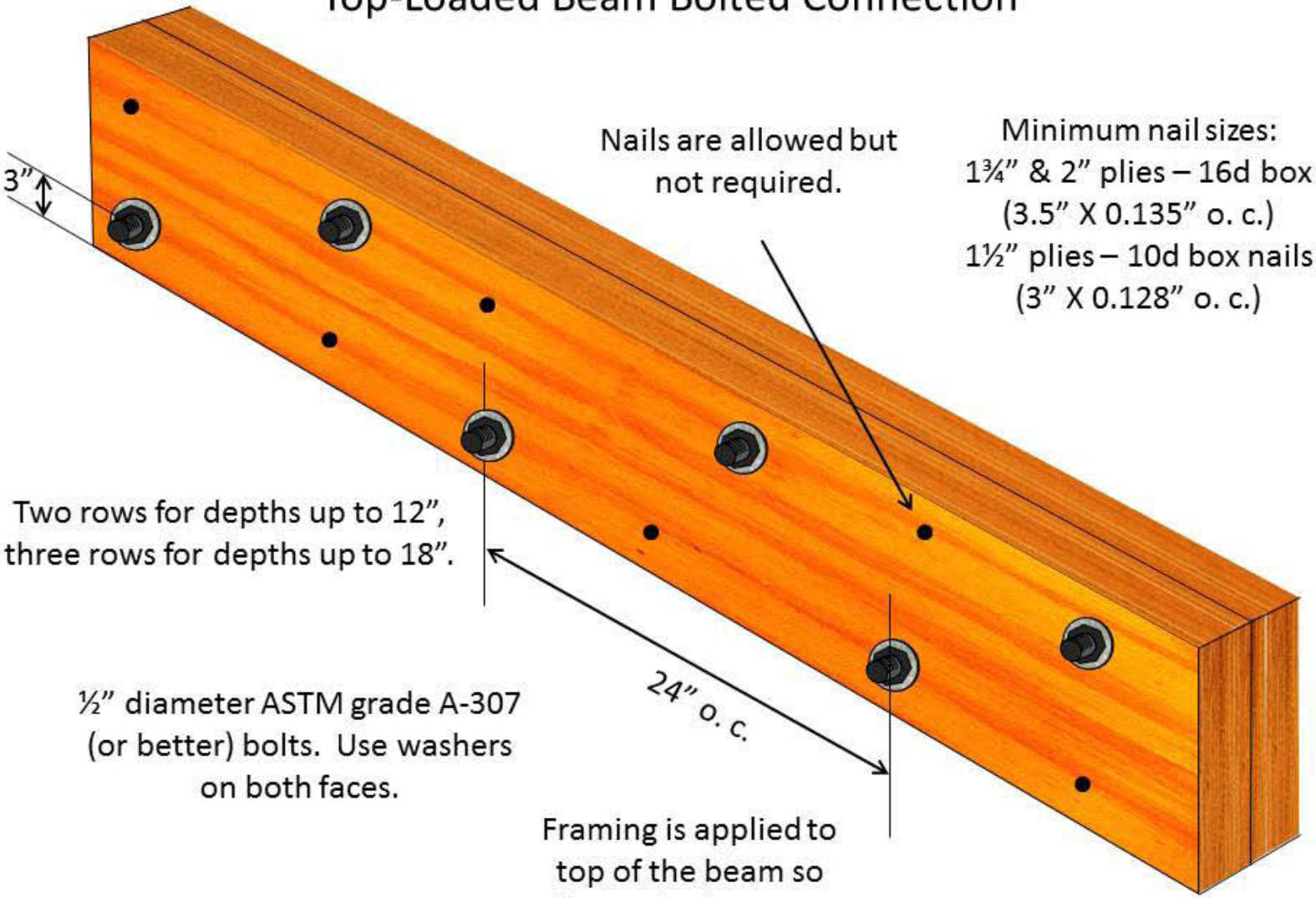

Top-Loaded Beam Nailed Connection

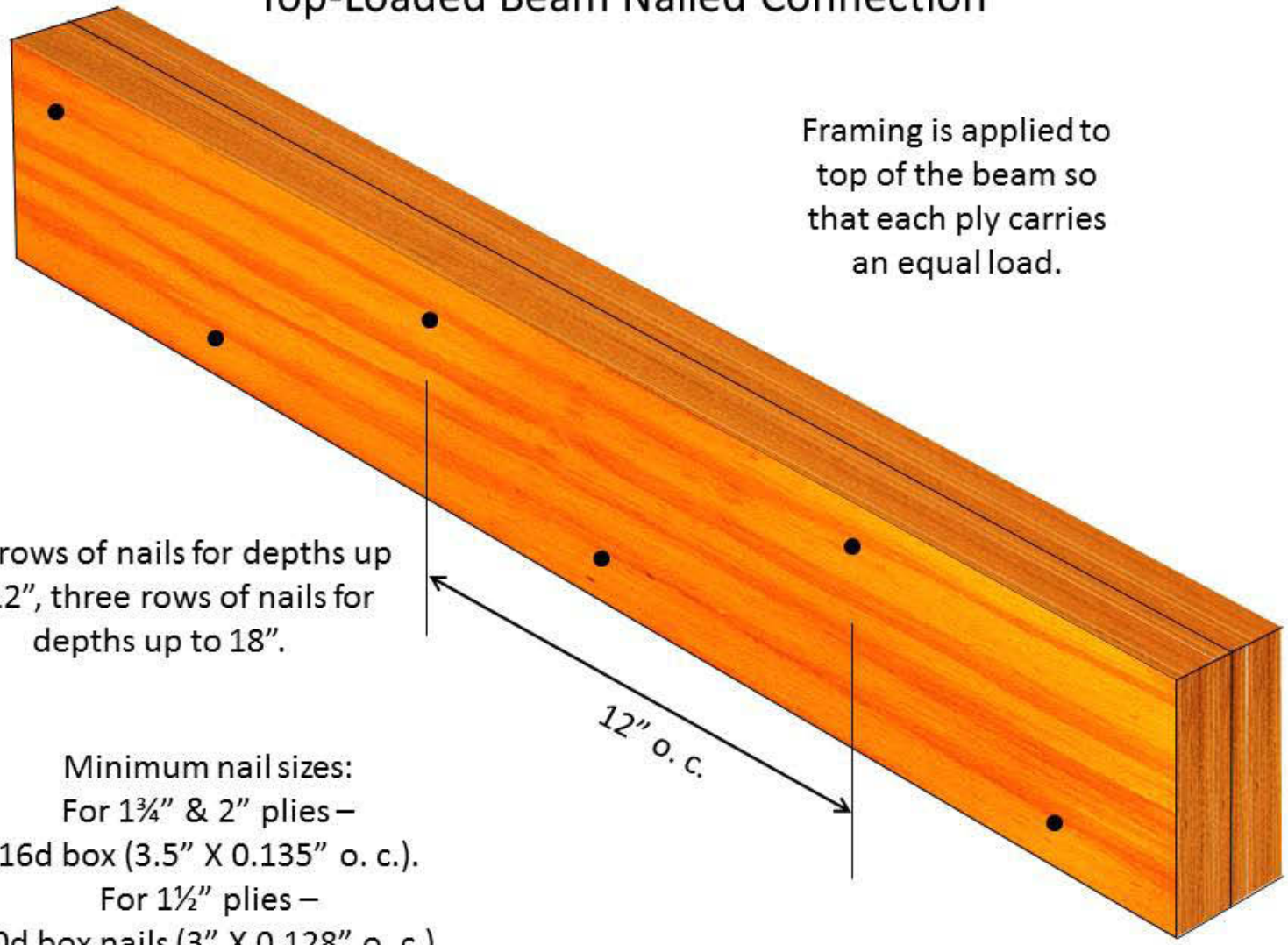

Framing is applied to top of the beam so that each ply carries an equal load.

Two rows of nails for depths up to 12", three rows of nails for depths up to 18".

Minimum nail sizes:
For 1¾" & 2" plies –
16d box (3.5" X 0.135" o. c.).
For 1½" plies –
10d box nails (3" X 0.128" o. c.).

Louisiana Pacific Solid Start® LSL and LVL Beams and Headers					
Simpson Strong-Tie® Connectors: Top Mount Hangers					
Supported Member Width	Supported Member Depth	Hanger Depth	Hanger	Fastener Schedule	
				Header	Joist
1¾"	7¼"	3"	LBV1.81/7.25	16d	10d X 1½"
	9¼"	3"	LBV1.81/9.25	16d	10d X 1½"
		4"	WPU1.81/9.25	16d	10d X 1½"
	9½"	2½"	MIT9.5	16d	10d X 1½"
		3"	LBV1.81/9.5	16d	10d X 1½"
	11¼"	3"	LBV1.81/11.25	16d	10d X 1½"
		4"	WPU1.81/11.25	16d	10d X 1½"
	11⅞"	2½"	MIT11.88	16d	10d X 1½"
		3"	BA1.81/11.88	16d	10d X 1½"
	14"	2½"	MIT1.81/14	16d	10d X 1½"
		3"	LBV1.81/14	16d	10d X 1½"
3½": Two plies of 1¾" LVL Or One ply of 3½" LVL & LSL	7¼"	3"	WPU3.56/7.25	16d	10d X 1½"
	9¼"	2½"	LBV3.56/9.25	16d	10d X 1½"
		3½"	HB3.56/9.25	16d	16d
	9½"	2½"	LBV3.56/9.5	16d	10d X 1½"
		3½"	HB3.56/9.5	16d	16d
	11¼"	2½"	B3.56/11.25	16d	16d
		3½"	HB3.56/11.25	16d	16d
	11⅞"	3"	BA3.56/11.88	16d	10d X 1½"
		3½"	HB3.56/11.88	16d	16d
	14"	3"	BA3.56/14	16d	10d X 1½"
		5"	GLTV3.514	16d	16d
	16"	3"	BA3.56/16	16d	10d X 1½"
		5"	GLTV3.516	16d	16d
	18"	3½"	BA3.56/18	16d	16d
		6"	HGLTV3.518	16d	16d
Source: Simpson Strong-Tie (2009a).Connector Selection Guide. CSG-LP09 4/09, exp. 6/11.					
16d nails = 0.162" dia. X 3½" long. 10d nails = 0.148" dia. X 3" long. 10d X 1½" nails = 0.148" dia. X 1½" long.					
HU hangers use both round and triangle holes.					

Louisiana Pacific Solid Start® LSL and LVL Beams and Headers					
Simpson Strong-Tie® Connectors: Top Mount Hangers					
Supported Member Width	Supported Member Depth	Hanger Depth	Hanger	Fastener Schedule	
				Header	Joist
5¼": Three plies of 1¾" LVL Or One ply of 5¼" LVL & LSL	7¼"	4"	WPU5.50/7.25	16d	10d X 1½"
	9¼"	3½"	HB5.50/9.25	16d	16d
		5"	GLTV5.50/9.25	16d	16d
	9½"	3½"	HB5.50/9.5	16d	16d
		5"	GLTV5.59	16d	16d
	11¼"	3½"	HB5.50/11.25	16d	16d
		5"	GLTV5.50/11.25	16d	16d
	11⅞"	3½"	HB5.50/11.88	16d	16d
		6"	GLTV5.511	16d	16d
	14"	3½"	HB5.50/14	16d	16d
		6"	EGQ5.50-SDS	SDS ¼" X 3"	SDS ¼" X 3"
	16"	3½"	HB5.50/16	16d	16d
		6"	EGQ5.50-SDS	SDS ¼" X 3"	SDS ¼" X 3"
	18"	6"	HGLTV5.518	16d	16d
		6"	EGQ5.50-SDS	SDS ¼" X 3"	SDS ¼" X 3"
7": Four plies of 1¾" LVL Or One ply of 7" LVL & LSL	7¼"	N/A	N/A	N/A	N/A
	9¼"	3½"	HB7.12/9.25	16d	16d
		5"	GLTV49.25-2	16d	16d
	9½"	3½"	HB7.12/9.5	16d	16d
		5"	GLTV49.5-2	16d	16d
	11¼"	3½"	HB7.12/11.25	16d	16d
		6"	HGLTV411.25-2	16d	16d
	11⅞"	3½"	HB7.12/11.88	16d	16d
		6"	EGQ7.25/SDS	SDS ¼" X 3"	SDS ¼" X 3"
	14"	5"	GLTV414-2	16d	16d
		6"	EGQ7.25/SDS	SDS ¼" X 3"	SDS ¼" X 3"
	16"	6"	HGLTV416-2	16d	16d
		6"	EGQ7.25/SDS	SDS ¼" X 3"	SDS ¼" X 3"
	18"	6"	HGLTV418-2	16d	16d
		6"	EGQ7.25/SDS	SDS ¼" X 3"	SDS ¼" X 3"
Source: Simpson Strong-Tie (2009a).Connector Selection Guide. CSG-LP09 4/09, exp. 6/11.					
16d nails = 0.162" dia. X 3½" long. 10d nails = 0.148" dia. X 3" long. 10d X 1½" nails = 0.148" dia. X 1½" long.					

Louisiana Pacific Solid Start® LSL and LVL Beams and Headers					
Simpson Strong-Tie® Connectors: Face Mount Hangers					
Supported Member Width	Supported Member Depth	Hanger Depth	Hanger	Fastener Schedule	
				Header	Joist
1¾"	7¼"	2½"	HU7	16d	10d X 1½"
	9¼"	2½"	HU7	16d	10d X 1½"
		3"	HUS1.81/10	16d	16d
	9½"	2½"	HU9	16d	10d X 1½"
		3"	HUS1.81/10	16d	16d
	11¼"	2½"	HU11	16d	10d X 1½"
		3"	HUS1.81/10	16d	16d
	11⅞"	2½"	HU11	16d	10d X 1½"
		3"	HUS1.81/10	16d	16d
	14"	2½"	HU14	16d	10d X 1½"
		3"	HUS1.81/10	16d	16d
3½": Two plies of 1¾" LVL Or One ply of 3½" LVL & LSL	7¼"	3"	HHUS48	16d	16d
	9¼"	3"	HHUS410	16d	16d
		4"	HGUS410	16d	16d
	9½"	3"	HHUS410	16d	16d
		4"	HGUS410	16d	16d
	11¼"	3"	HHUS410	16d	16d
		4"	HGUS412	16d	16d
	11⅞"	3"	HHUS410	16d	16d
		4"	HGUS412	16d	16d
	14"	3"	HHUS410	16d	16d
		4"	HGUS414	16d	16d
	16"	3"	HHUS410	16d	16d
		4"	HGUS414	16d	16d
	18"	3"	HHUS410	16d	16d
		4"	HGUS414	16d	16d
Source: Simpson Strong-Tie (2009a). Connector Selection Guide. CSG-LP09 4/09, exp. 6/11.					
16d nails = 0.162" dia. X 3½" long. 10d nails = 0.148" dia. X 3" long. 10d X 1½" nails = 0.148" dia. X 1½" long.					
HU hangers use both round and triangle holes.					

Louisiana Pacific Solid Start® LSL and LVL Beams and Headers					
Simpson Strong-Tie® Connectors: Face Mount Hangers					
Supported Member Width	Supported Member Depth	Hanger Depth	Hanger	Fastener Schedule	
				Header	Joist
5¼": Three plies of 1¾" LVL Or One ply of 5¼" LVL & LSL	7¼"	2½"	HU68	16d	16d
	9¼"	3"	HHUS5.50/10	16d	16d
		4"	HGUS5.50/10	16d	16d
	9½"	3"	HHUS5.50/10	16d	16d
		4"	HGUS5.50/10	16d	16d
	11¼"	3"	HHUS5.50/10	16d	16d
		4"	HGUS5.50/12	16d	16d
	11⅞"	3"	HHUS5.50/10	16d	16d
		4"	HGUS5.50/12	16d	16d
	14"	3"	HHUS5.50/10	16d	16d
		4"	HGUS5.50/14	16d	16d
	16"	4"	HGUS5.50/14	16d	16d
		5¼"	HGU5.50-SDS	SDS ¼" X 2½"	SDS ¼" X 2½"
	18"	4"	HGUS5.50/14	16d	16d
		5¼"	HGU5.50-SDS	SDS ¼" X 2½"	SDS ¼" X 2½"
7": Four plies of 1¾" LVL Or One ply of 7" LVL & LSL	7¼"	N/A	N/A	N/A	N/A
	9¼"	3 5/16"	HHUS7.25/10	16d	16d
		4"	HGUS7.25/10	16d	16d
	9½"	3 5/16"	HHUS7.25/10	16d	16d
		4"	HGUS7.25/10	16d	16d
	11¼"	3 5/16"	HHUS7.25/10	16d	16d
		4"	HGUS7.25/12	16d	16d
	11⅞"	3 5/16"	HHUS7.25/10	16d	16d
		4"	HGUS7.25/12	16d	16d
	14"	4"	HGUS7.25/14	16d	16d
		5¼"	HGU7.25-SDS	SDS ¼" X 2½"	SDS ¼" X 2½"
	16"	4"	HGUS7.25/14	16d	16d
		5¼"	HGU7.25-SDS	SDS ¼" X 2½"	SDS ¼" X 2½"
	18"	4"	HGUS7.25/14	16d	16d
		5¼"	HGU7.25-SDS	SDS ¼" X 2½"	SDS ¼" X 2½"
Source: Simpson Strong-Tie Connector Selection Guide. CSG-LP09 4/09, exp. 6/11.					
16d nails = 0.162" dia. X 3½" long. 10d nails = 0.148" dia. X 3" long. 10d X 1½" nails = 0.148" dia. X 1½" long.					
HU hangers use both round and triangle holes.					

Louisiana Pacific Solid Start® LVL Beams and Headers				
United Steel Products® Structural Connectors: Top Mount Hangers				
Supported Member Width	Supported Member Depth	Hanger	Fastener Schedule	
			Header	Joist
1¾"	7¼"	PHXU17725	16d	10d X 1½"
	9¼"	THO17925	10d	10d X 1½"
		PHXU17925	16d	10d X 1½"
	9½"	THO17950	10d	10d X 1½"
		PHXU1795	16d	10d X 1½"
	11¼"	THO17112	10d	10d X 1½"
		PHXU17112	16d	10d X 1½"
	11⅞"	THO17118	10d	10d X 1½"
		PHXU17118	16d	10d X 1½"
	14"	THO17140	10d	10d X 1½"
		PHXU1714	16d	10d X 1½"
3½": Two plies of 1¾" LVL Or One ply of 3½" LVL & LSL	7¼"	N/A	N/A	N/A
	9¼"	PHXU35925	16d	10d
		HLBH35925	NA16D-RS	16d
	9½"	PHXU3595	16d	10d
		HLBH3595	NA16D-RS	16d
	11¼"	PHXU35112	16d	10d
		HLBH35112	NA16D-RS	16d
	11⅞"	PHXU35118	16d	10d
		HLBH35118	NA16D-RS	16d
	14"	PHXU3514	16d	10d
		HLBH3514	NA16D-RS	16d
	16"	PHXU3516	16d	10d
		HLBH3516	NA16D-RS	16d
	18"	PHXU3518	16d	10d
		HLBH3518	NA16D-RS	16d
Source: USP (2007). USP Structural Connectors®. USP972-071.				
16d nails = 0.162" dia. X 3½" long. 10d nails = 0.148" dia. X 3" long. 10d X 1½" nails = 0.148" dia. X 1½" long.				

Louisiana Pacific Solid Start® LVL Beams and Headers				
United Steel Products® Structural Connectors: Top Mount Hangers				
Supported Member Width	Supported Member Depth	Hanger	Fastener Schedule	
			Header	Joist
5¼": Three plies of 1¾" LVL	7¼"	N/A	N/A	N/A
	9¼"	PHXU52925	16d	10d
		HLBH52925	NA16D-RS	16d
	9½"	PHXU5295	16d	10d
		HLBH5295	NA16D-RS	16d
	11¼"	PHXU52112	16d	10d
		HLBH52112	NA16D-RS	16d
	11⅞"	PHXU52118	16d	10d
		HLBH52118	NA16D-RS	16d
	14"	PHXU5214	16d	10d
		HLBH5214	NA16D-RS	16d
	16"	PHXU5216	16d	10d
		HLBH5216	NA16D-RS	16d
	18"	PHXU5218	16d	10d
		HLBH5218	NA16D-RS	16d
7": Four plies of ¾" LVL Or Two plies of 3½" LVL	7¼"	N/A	N/A	N/A
	9¼"	PHXU71925	16d	10d
		HLBH71925	NA16D-RS	16d
	9½"	PHXU7195	16d	10d
		HLBH7195	NA16D-RS	16d
	11¼"	PHXU71112	16d	10d
		HLBH71112	NA16D-RS	16d
	11⅞"	PHXU71118	16d	10d
		HLBH71118	NA16D-RS	16d
	14"	PHXU7114	16d	10d
		HLBH7114	NA16D-RS	16d
	16"	PHXU7116	16d	10d
		HLBH7116	NA16D-RS	16d
	18"	PHXU7118	16d	10d
		HLBH7118	NA16D-RS	16d
Source: USP (2007). USP Structural Connectors®. USP972-071.				
16d nails = 0.162" dia. X 3½" long. 10d nails = 0.148" dia. X 3" long. 10d X 1½" nails = 0.148" dia. X 1½" long.				

Louisiana Pacific Solid Start® LVL Beams and Headers				
United Steel Products® Structural Connectors: Face Mount Hangers				
Supported Member Width	Supported Member Depth	Hanger	Fastener Schedule	
			Header	Joist
1¾"	7¼"	N/A	N/A	N/A
	9¼"	HD17925	16d	10d X 1½"
		HUS179	16d	16d
	9½"	HD17925	16d	10d X 1½"
		HUS179	16d	16d
	11¼"	HD17112	16d	10d X 1½"
		HUS179	16d	16d
	11⅞"	HD17112	16d	10d X 1½"
		HUS179	16d	16d
	14"	HD1714	16d	10d X 1½"
		HUS179	16d	16d
3½": Two plies of 1¾" LVL Or One ply of 3½" LVL	7¼"	N/A	N/A	N/A
	9¼"	THD410	16d	10d
		THDH410	16d	16d
	9½"	THD410	16d	10d
		THDH410	16d	16d
	11¼"	THD410	16d	10d
		THDH412	16d	16d
	11⅞"	THD410	16d	10d
		THDH412	16d	16d
	14"	THD410	16d	10d
		THDH414	16d	16d
	16"	THD412	16d	10d
		THDH414	16d	16d
	18"	THD412	16d	10d
		THDH414	16d	16d
Source: USP (2007). USP Structural Connectors®. USP972-071.				
16d nails = 0.162" dia. X 3½" long. 10d nails = 0.148" dia. X 3" long. 10d X 1½" nails = 0.148" dia. X 1½" long.				

Louisiana Pacific Solid Start® LVL Beams and Headers				
United Steel Products® Structural Connectors: Face Mount Hangers				
Supported Member Width	Supported Member Depth	Hanger	Fastener Schedule	
			Header	Joist
5¼": Three plies of 1¾" LVL	7¼"	N/A	N/A	N/A
	9¼"	THD610	16d	10d
		THDH610	16d	16d
	9½"	THD610	16d	10d
		THDH610	16d	16d
	11¼"	THD610	16d	10d
		THDH612	16d	16d
	11⅞"	THD610	16d	10d
		THDH612	16d	16d
	14"	THD610	16d	10d
		THDH614	16d	16d
	16"	THD612	16d	10d
		THDH614	16d	16d
	18"	THD612	16d	10d
		THDH614	16d	16d
7": Four plies of ¾" LVL Or Two plies of 3½" LVL	7¼"	N/A	N/A	N/A
	9¼"	THD7210	16d	16d
		THDH7210	16d	16d
	9½"	THD7210	16d	16d
		THDH7210	16d	16d
	11¼"	THD7212	16d	16d
		THDH7210	16d	16d
	11⅞"	THD7210	16d	16d
		THDH7212	16d	16d
	14"	THD7210	16d	16d
		THDH7214	16d	16d
	16"	HD7120	16d	10d
		THDH7214	16d	16d
	18"	HD7140	16d	10d
		THDH7214	16d	16d
Source: USP (2007). USP Structural Connectors®. USP972-071.				
16d nails = 0.162" dia. X 3½" long. 10d nails = 0.148" dia. X 3" long. 10d X 1½" nails = 0.148" dia. X 1½" long.				

Louisiana Pacific Solid Start® LSL Beam and Header Fasteners						
Detail A	Detail B	Detail C	Detail D	Detail F	Detail G	Detail H
Max 4" wide 2-ply beams	Max 6" wide 3-ply beams	Max 5½" wide 2-ply beams	Max 7½" wide 3-ply beams	Max 7" wide 3- or 4- ply beams	Max 7" wide 2- ply beams	Max 5¼" wide 2- or 3-ply beams
2" max ply thickness.	2" max ply thickness.	2" max side- & 3½" max main-members.	2" max side- & 3½" max main-members.			SDS ¼" X 6" screws (or equal)
Fasteners ≥ 2" from top and bottom.	Fasteners ≥ 2" from top and bottom.	Fasteners ≥ 2" from top and bottom.	Fasteners ≥ 2" from top and bottom.	Fasteners ≥ 3" from top and bottom.	Fasteners ≥ 3" from top and bottom.	Fasteners ≥ 2" from top and bottom.
		Side fasteners ≥ 2", & main 3½" from top and bottom.	Side fasteners ≥ 2", & main 3½" from top and bottom.			
Source: Louisiana Pacific (2010b). Louisiana-Pacific LPEW0247 3/2009. 5M MW.						
SDS screws produced by Simpson Strong-Tie.						
Use 2 rows of nails for depths to 12". Use 3 rows for depths > 12", up to 18".						
Use 3½" nails for 1¾" and 2" thick plies. Use 3" nails for 1½" thick plies. If the nails deo not penetrate the second ply (main member), drive the nails from both faces.						
For detail 'A', or when attaching the first two plies of details 'B' and 'F' (optional), nails may be driven all from one face or alternating from both faces. If the nails do not fully penetrate the second ply, they must be driven from both faces.						
When driving nails from both faces, alternate every other nail in each row.						
For detail 'C' when side-loaded, the larger side-load shall be applied to the thicker ply (main member.						
For details 'F' and 'H', it is permissable to nail plies together before bolting or driving SDS (or equal) screws. Nail two plies together then nail one additional ply to the side(s).						
Beams wider than 5½" shall be top-loaded or side-loaded from both sides to prevent rotation. Must have an engineered design when side loads are only on one side of a beam.						

Louisiana Pacific Solid Start® LSL Beam and Header Fastener Orientation

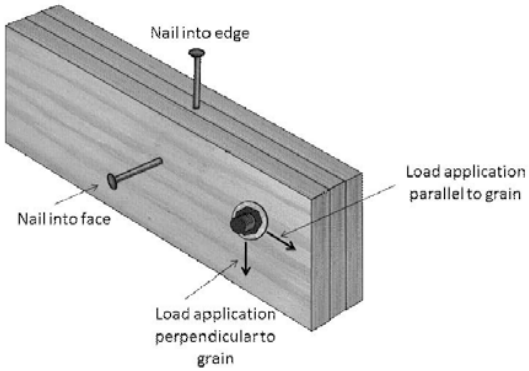

Nail Spacing Requirements

LSL Ply Thickness	Fastener Orientation	Nail Size	Minimum End Distance	Minimum Nail Spacing	
				Single Row	Multiple Row
≥ 1½"	Edge	8d & smaller	2"	3"	3"
		10d & 12d	2"	3"	4"
		16d	2½"	4"	6"
	Face	8d & smaller	⅞"	1"	
		10d & 12d	⅞"	1"	
		16d	⅞"	1½"	

Source: Louisiana Pacific (2010b). Louisiana-Pacific LPEW0247 3/2009. 5M MW.

Edge distance shall be such that it does not cause splitting.

Multiple rows of nails shall be offset at least ½" and staggered.

Edge orientation refers to nails driven in the narrow edge of the LSL, parallel to face of strands.

Face orientation refers to nails driven in the wide face of the LSL, perpendicular to face of strands.

Single row spacing for 16d nails into the edge can be reduced to 3" for 1¾" or thicker LSL.

16d sinkers (0.148" X 3¼") can be spaced the same as 10d and 12d nails.

Louisiana Pacific Solid Start® LSL and LVL Column Fasteners				
	2 X 1½" X 3½"	**3 X 1½" X 3½"**	**2 X 1½" X 5½"**	**3 X 1½" X 5½"**
			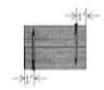	
	2 X 1½" X 3½"	**3 X 1½" X 3½"**	**2 X 1½" X 5½" and wider**	**3 X 1½" X 5½" and wider.**
Rows	1 row	1 row	2 rows	3 rows
Fastener	10d box (0.128"x3")	10d box (0.128"x3")	10d box (0.128"x3")	10d box (0.128"x3")
Spacing	6" on center (o.c.)	4" on center (o.c.)	6" on center (o.c.)	6" on center (o.c.)
Pattern	Every other nail from opposite face; offset horizontally.	Horizontally offset every other nail in the row. Stagger nails on each face.	Every other nail in a row from opposite sides. Stagger rows.	Stagger rows on each face and from front to back.

4-ply 1½" X 5½" and wider (not shown)	
Rows	Two rows
Fastener	½" bolts
Spacing	8" on center (o.c.)
Pattern	Maintain a 2" minimum edge distance and a 4" minimum end distance.

Source: Louisiana Pacific (2010b). Louisiana-Pacific LPEW0247 3/2009. 5M MW.
Larger nails may be used, but do not use nails larger than a 16d common (0.162 X 3½").
Do not exceed three plies for 1½" X 3½" members.

Appendix L: Nordic Details

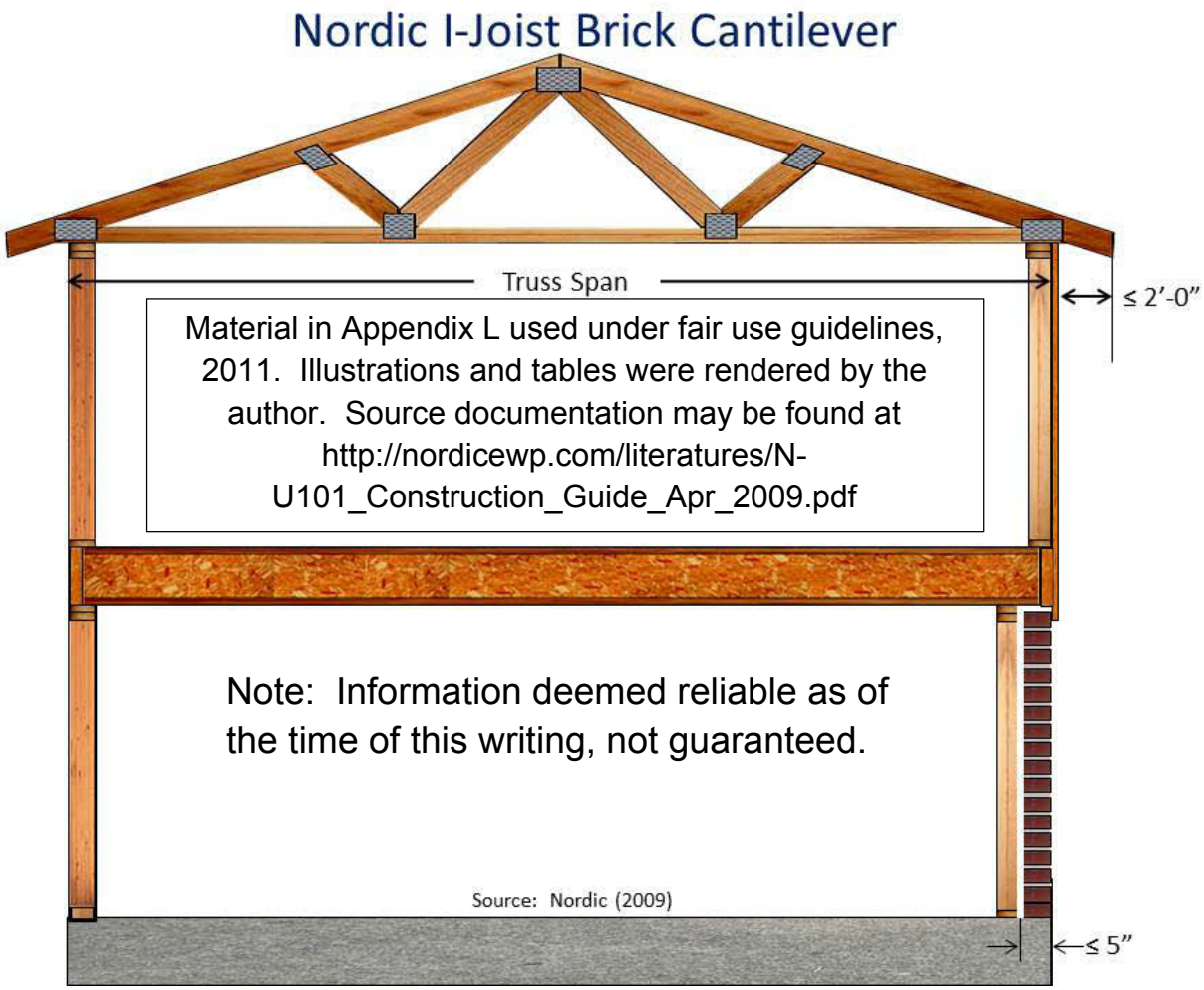

Nordic I-Joist Brick Cantilevers for Hip Roofs

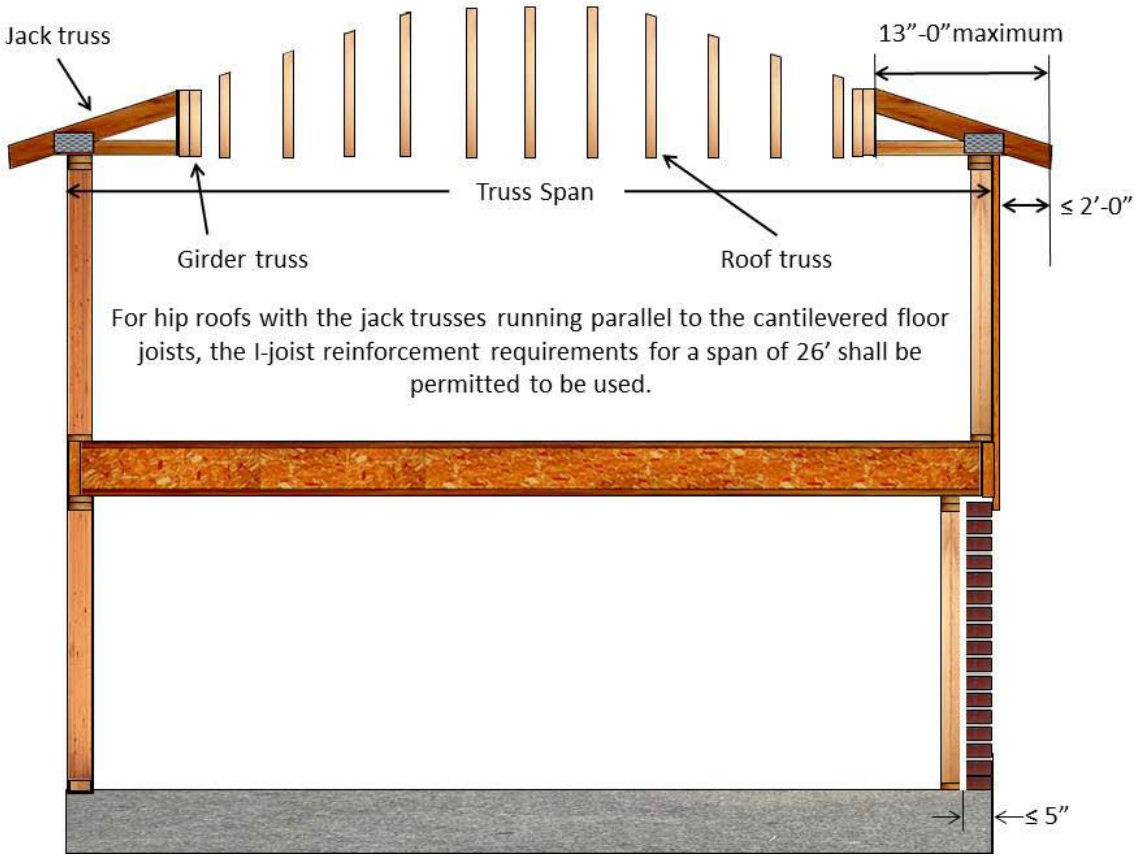

Bearing Cantilever

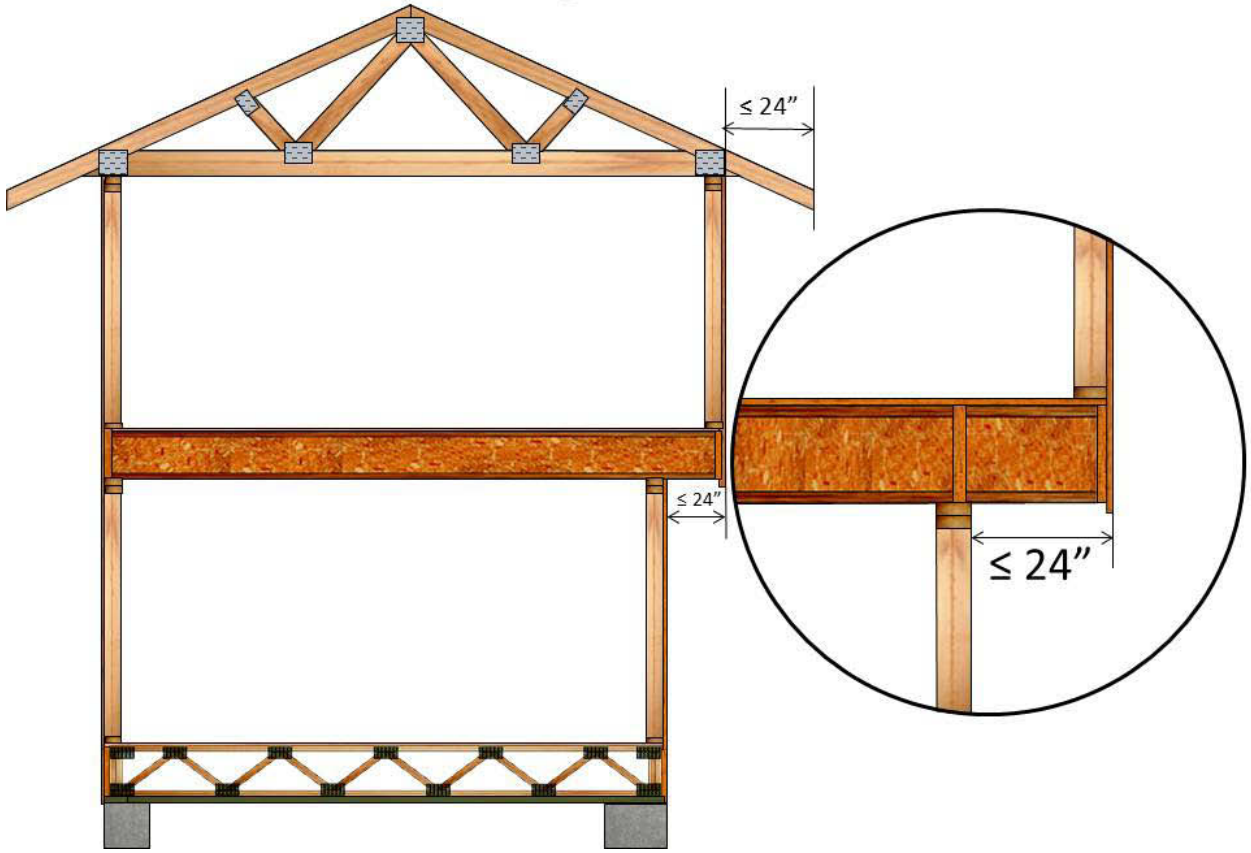

Nordic I-Joist Bearing Cantilevers

Nordic I-Joist Bearing Cantilevers

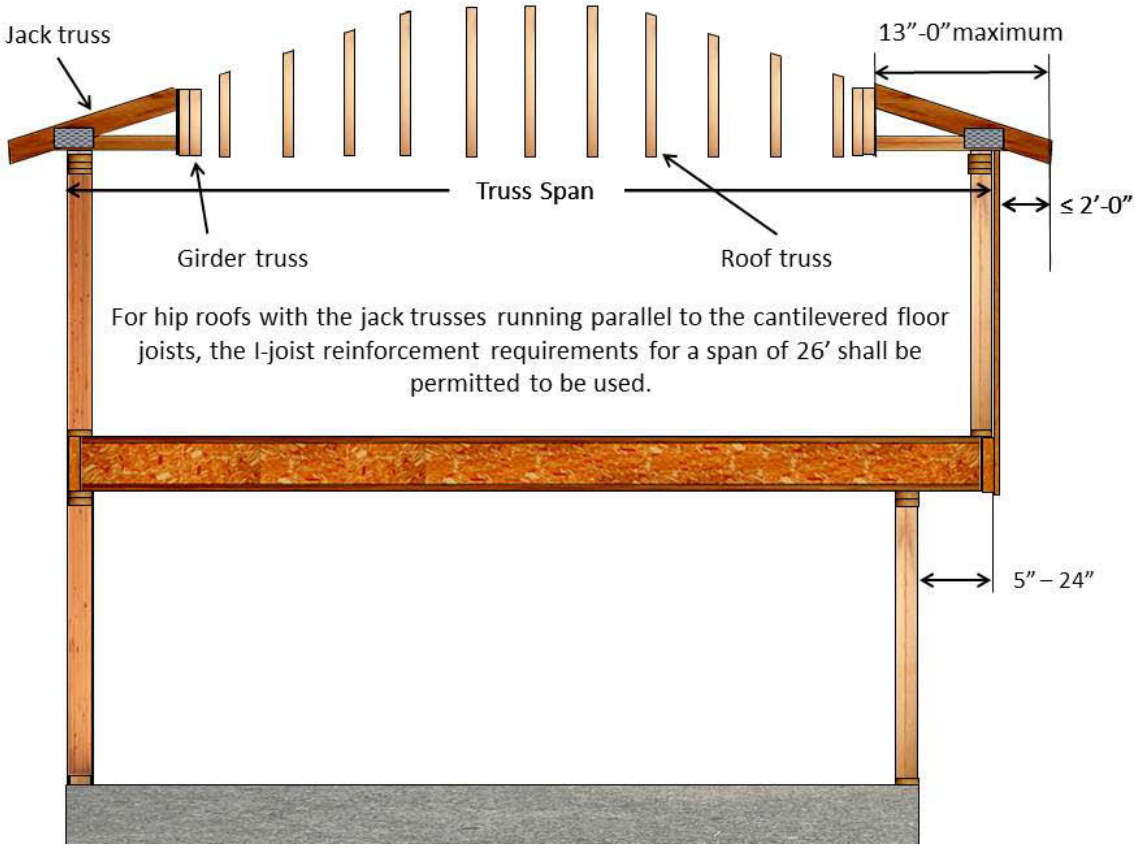

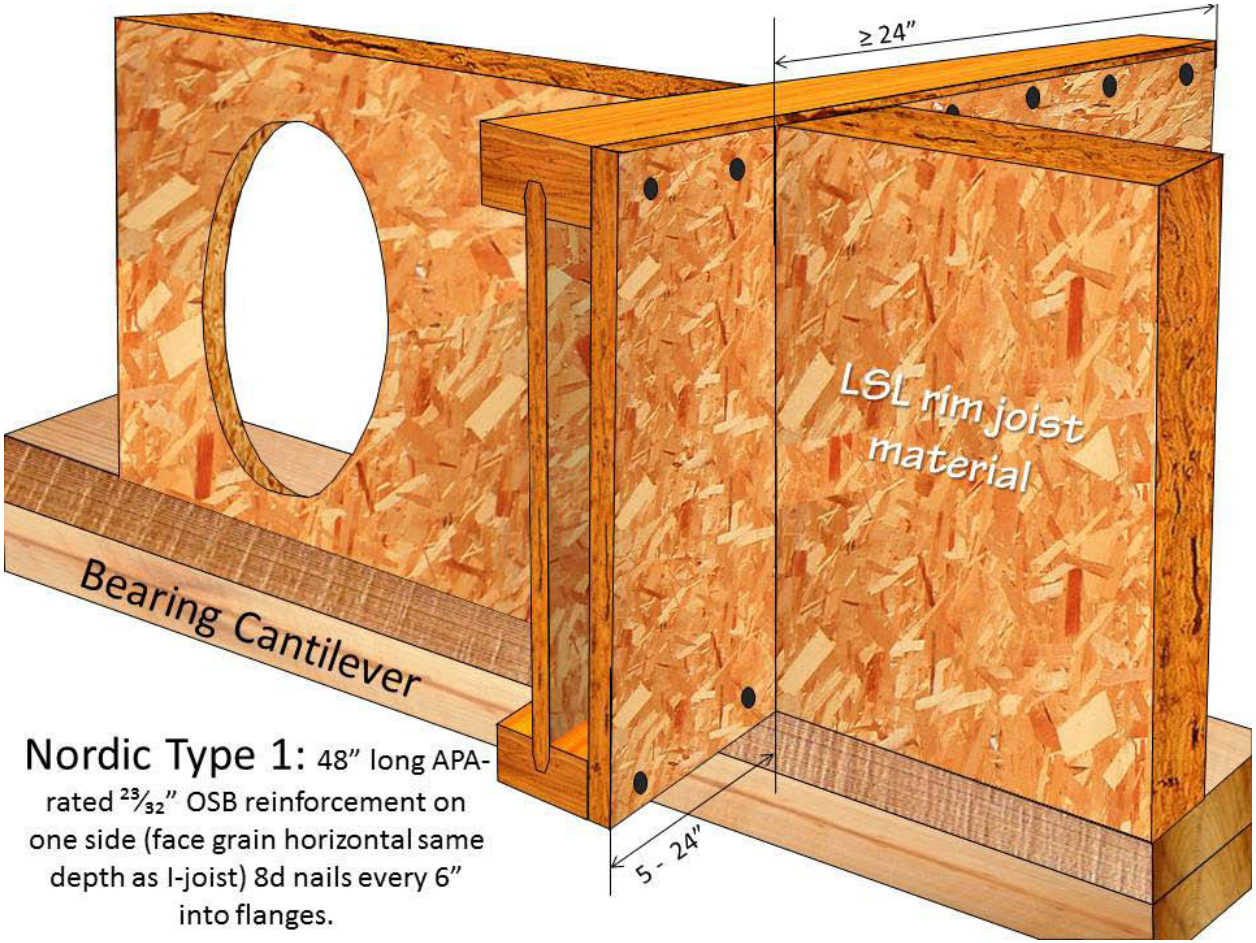

Nordic Type 1: 48" long APA-rated 23/32" OSB reinforcement on one side (face grain horizontal same depth as I-joist) 8d nails every 6" into flanges.

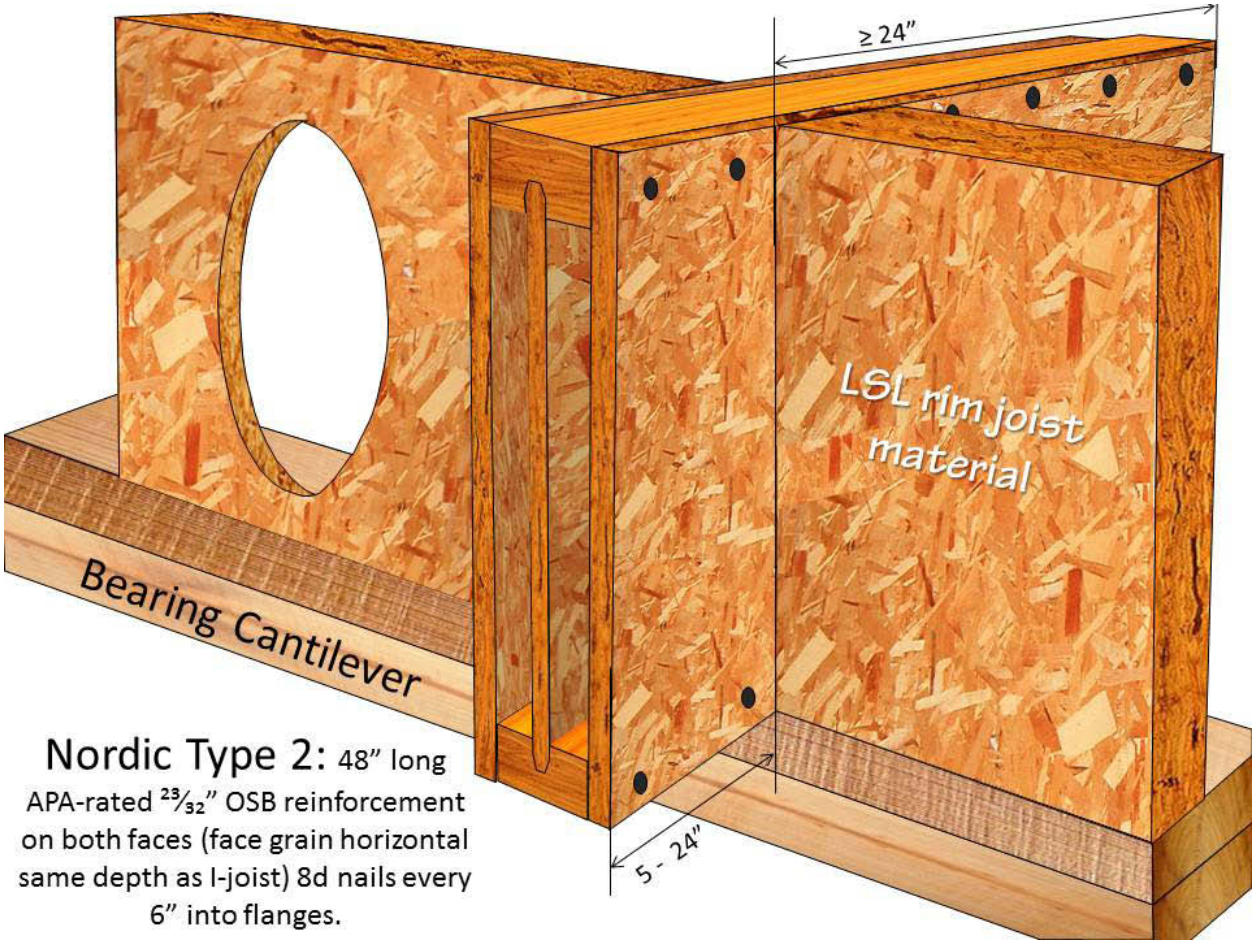

Nordic Type 2: 48" long APA-rated 23/32" OSB reinforcement on both faces (face grain horizontal same depth as I-joist) 8d nails every 6" into flanges.

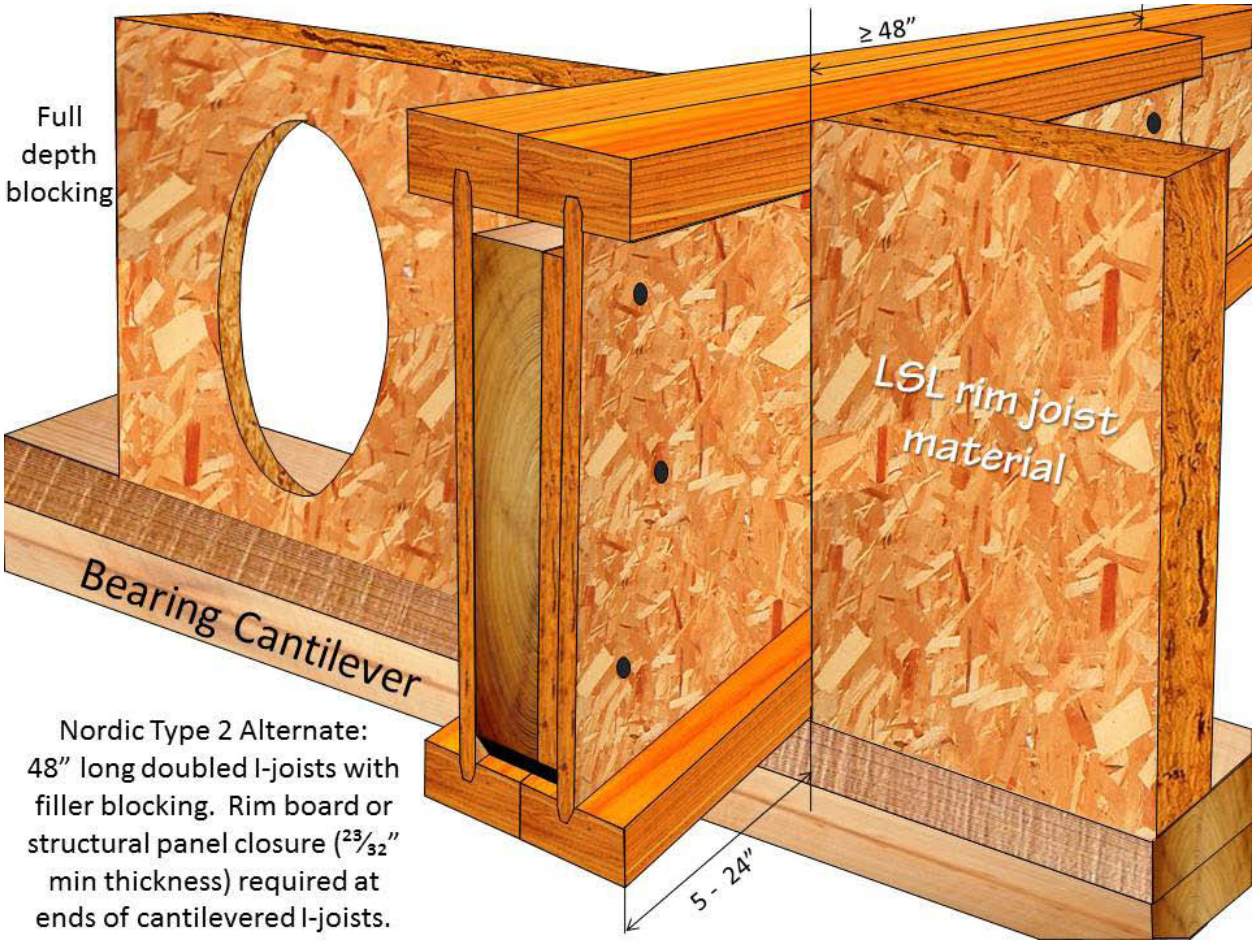

Nordic Type 2 Alternate: 48" long doubled I-joists with filler blocking. Rim board or structural panel closure (23/32" min thickness) required at ends of cantilevered I-joists.

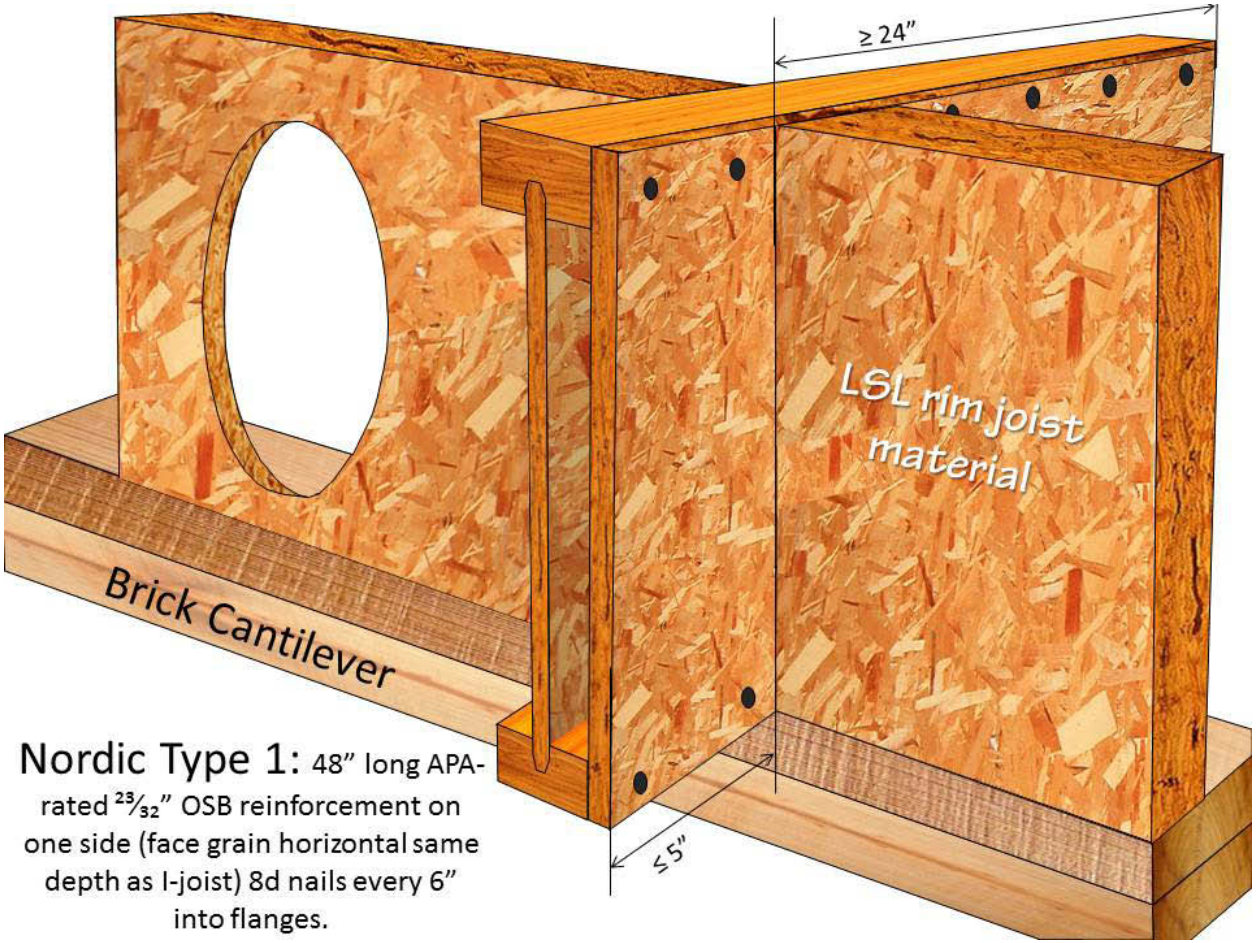

Nordic Type 1: 48" long APA-rated 23/32" OSB reinforcement on one side (face grain horizontal same depth as I-joist) 8d nails every 6" into flanges.

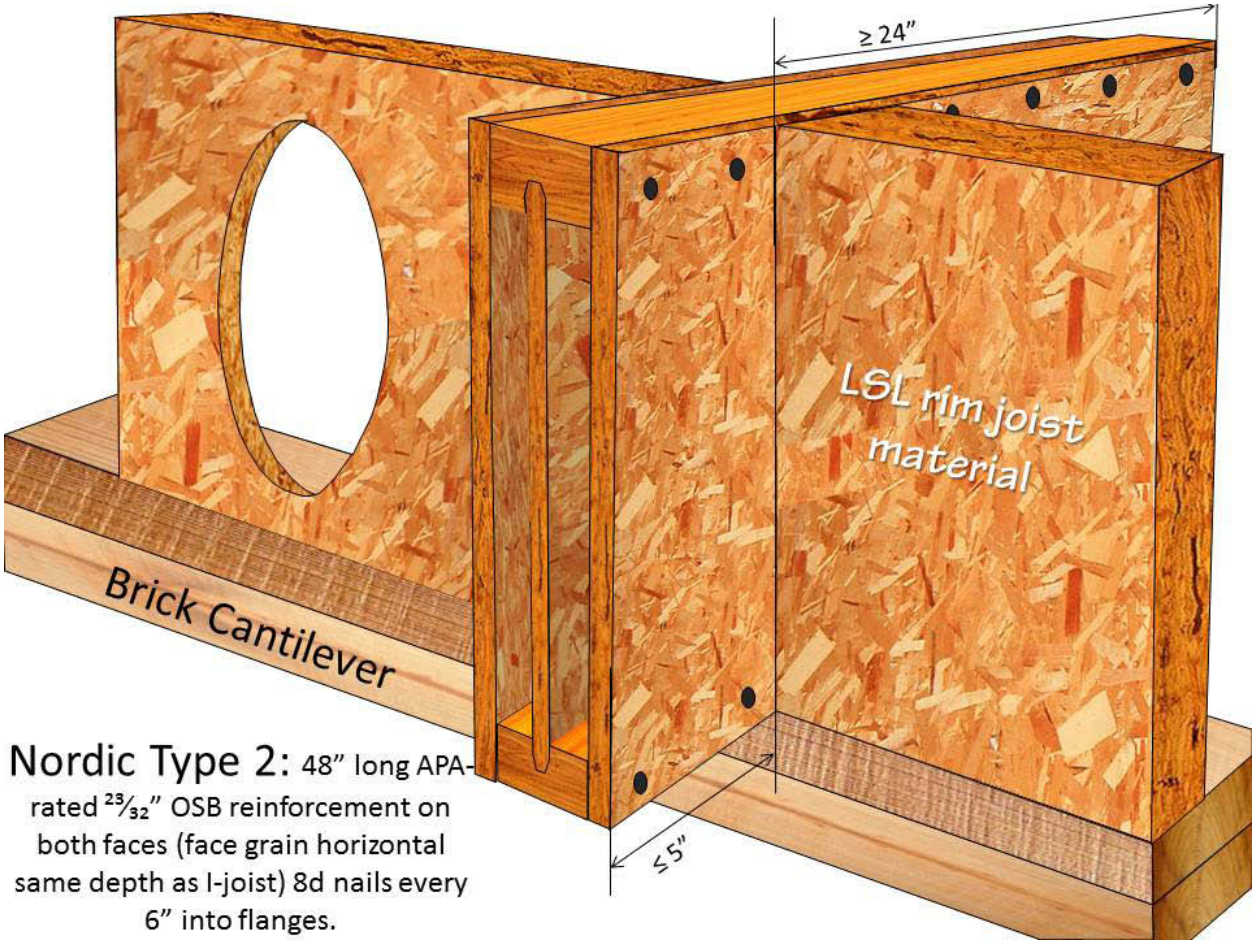

Nordic Type 2: 48" long APA-rated 23/32" OSB reinforcement on both faces (face grain horizontal same depth as I-joist) 8d nails every 6" into flanges.

Nordic Brick Ledge Cantilever No Reinforcement

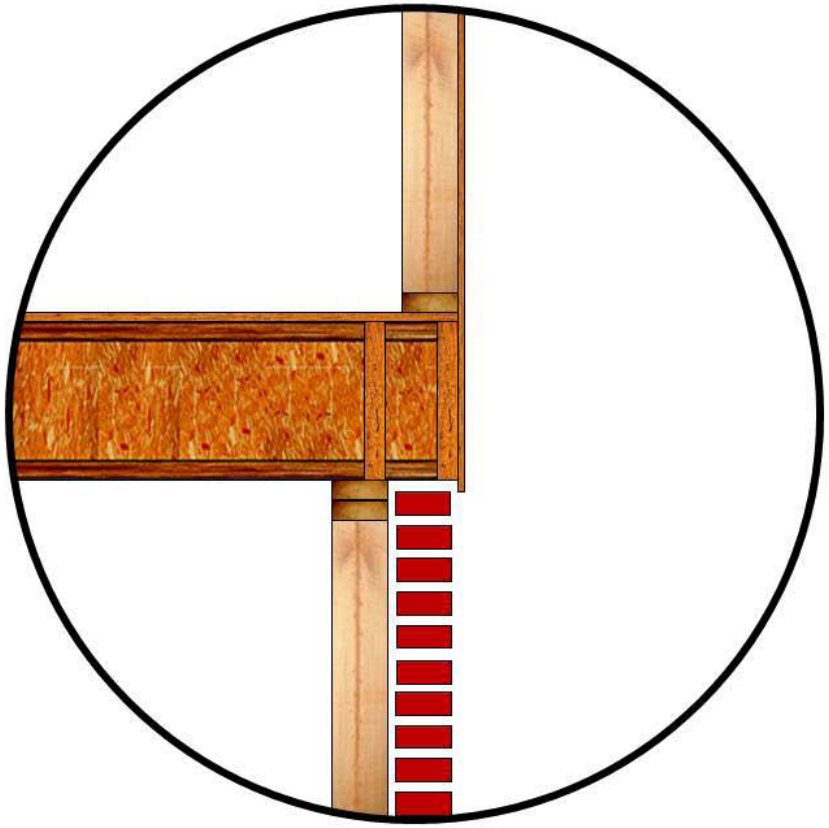

Nordic Type 1 Brick Ledge Cantilever

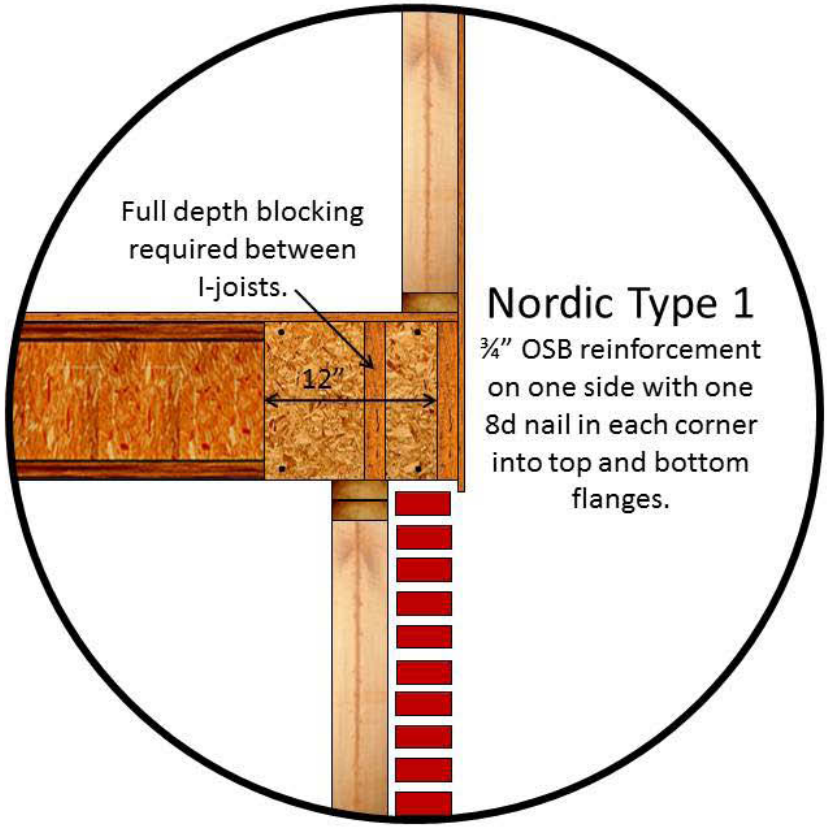

Nordic Type 2 Bearing Cantilever Reinforcement

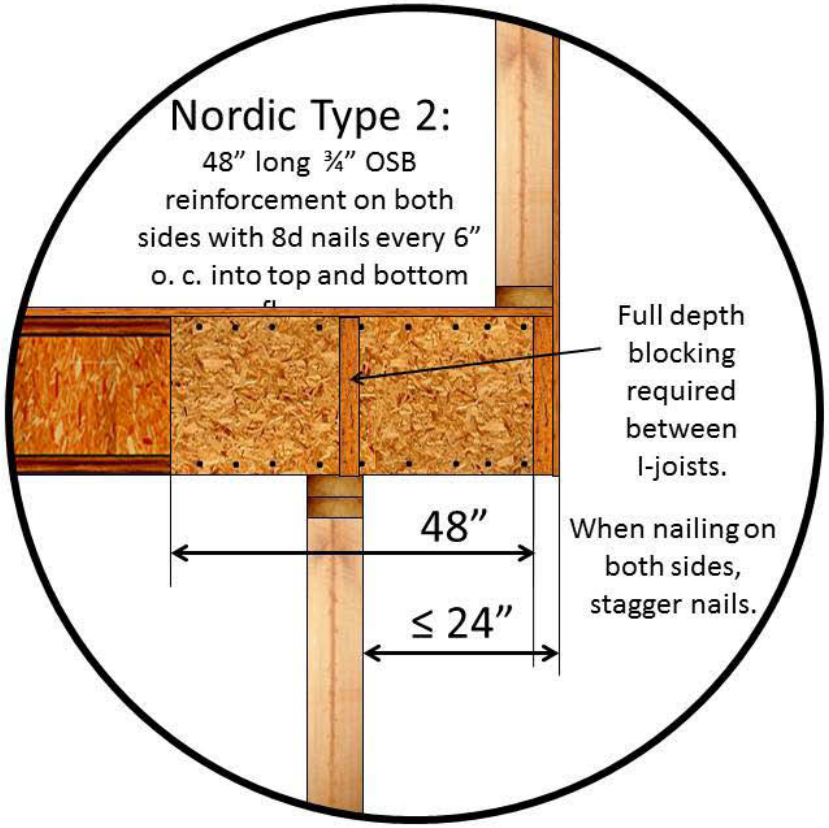

Joist Depth (in.)	Roof Truss Span (ft.)	Nordic Brick Ledge Cantilever (up to 5" cantilever) Methods Allowed							
		Roof loading: LL = 20 PSF, DL = 15 PSF				Roof loading: LL = 30 PSF, DL = 15 PSF			
		Joist Spacing (in.)				Joist Spacing (in.)			
		12"	16"	19.2"	24"	12"	16"	19.2"	24"
9½"	26	N	N	N	1	N	N	N	2
	28	N	N	N	1	N	N	1	2
	30	N	N	N	1	N	N	1	2
	32	N	N	N	1	N	N	1	X
	34	N	N	N	2	N	N	2	X
	36	N	N	1	2	N	1	2	X
11⅞"	26	N	N	N	1	N	N	N	1
	28	N	N	N	1	N	N	1	1
	30	N	N	N	1	N	N	1	1
	32	N	N	N	1	N	N	1	2
	34	N	N	N	1	N	N	1	2
	36	N	N	N	1	N	N	1	2
	38	N	N	1	1	N	1	1	X
14"	26	N	N	N	N	N	N	N	N
	28	N	N	N	N	N	N	N	N
	30	N	N	N	N	N	N	N	N
	32	N	N	N	N	N	N	N	N
	34	N	N	N	N	N	N	N	N
	36	N	N	N	N	N	N	N	1
	38	N	N	N	N	N	N	N	1
	40	N	N	N	N	N	N	N	1
16"	26	N	N	N	N	N	N	N	N
	28	N	N	N	N	N	N	N	N
	30	N	N	N	N	N	N	N	N
	32	N	N	N	N	N	N	N	N
	34	N	N	N	N	N	N	N	1
	36	N	N	N	N	N	N	N	1
	38	N	N	N	N	N	N	N	1
	40	N	N	N	N	N	N	N	1
	42	N	N	N	N	N	N	1	1

Source: Nordic Engineered Wood Residential Construction Guide. Nordic (2009) N-U101/April 2009.
N = No reinforcement required.
1 = NI reinforced with $^{23}/_{32}$" wood structural panel on one side only.
2 = NI reinforced with $^{23}/_{32}$" wood structural panel on both sides, or double I-joist.
X = Try a deeper joist or closer spacing.
Applies to joists 12" to 24" o. c. that meet the floor span requirements for a design LL of 40 PSF and DL of 10 PSF, and a live load deflection of L/480. Use 12" o. c. requirements for lesser spacing.
For conventional roof construction using a ridge beam, the roof truss span column above is equivalent to the distance between the supporting wall and the ridge beam. When the roof is framed using a ridge board, the roof truss span is equivalent to the distance between the supporting walls as if a truss is used.
Cantilevered joists supporting girder trusses or roof beams may require additional reinforcing.

Joist Depth (in.)	Roof Truss Span (ft)	Nordic Bearing Cantilever (up to 24" cantilever) Methods Allowed							
		Roof loading: LL = 20 PSF, DL = 15 PSF				Roof loading: LL = 30 PSF, DL = 15 PSF			
		Joist Spacing (in.)				Joist Spacing (in.)			
		12"	16"	19.2"	24"	12"	16"	19.2"	24"
9½"	26	N	N	N	1	N	N	1	2
	28	N	N	1	1	N	N	1	2
	30	N	N	1	1	N	1	1	2
	32	N	N	1	2	N	1	1	2
	34	N	N	1	2	N	1	2	X
	36	N	N	1	2	N	1	2	X
11⅞"	26	N	N	N	1	N	N	1	2
	28	N	N	N	1	N	N	1	2
	30	N	N	1	1	N	N	1	2
	32	N	N	1	1	N	1	1	2
	34	N	N	1	2	N	1	1	X
	36	N	N	1	2	N	1	2	X
	38	N	N	1	2	N	1	2	X
14"	26	N	N	N	N	N	N	N	N
	28	N	N	N	N	N	N	N	N
	30	N	N	N	N	N	N	N	1
	32	N	N	N	N	N	N	N	1
	34	N	N	N	N	N	N	N	1
	36	N	N	N	N	N	N	N	1
	38	N	N	N	N	N	N	N	1
	40	N	N	N	1	N	N	N	1
16"	26	N	N	N	N	N	N	N	N
	28	N	N	N	N	N	N	N	1
	30	N	N	N	N	N	N	N	1
	32	N	N	N	N	N	N	N	1
	34	N	N	N	N	N	N	N	1
	36	N	N	N	N	N	N	N	1
	38	N	N	N	1	N	N	N	1
	40	N	N	N	1	N	N	N	1
	42	N	N	N	1	N	N	1	2

Source: Nordic Engineered Wood Residential Construction Guide. N-U101/April 2009.

N = No reinforcement required.

1 = NI reinforced with 23/32" wood structural panel on one side only.

2 = NI reinforced with 23/32" wood structural panel on both sides, or double I-joist.

X = Try a deeper joist or closer spacing.

Applies to joists 12" to 24" o. c. that meet the floor span requirements for a design LL of 40 PSF and DL of 10 PSF, and a live load deflection of L/480. Use 12" o. c. requirements for lesser spacing.

For conventional roof cponstruction using a ridge beam, the roof truss span column above is equivalent to the distance between the supporting wall and the ridge beam. When the roof is framed using a ridge board, the roof truss span is equivalent to the distance between the supporting walls as if a truss is used.

Cantilevered joists supporting girder trusses or roof beams may require additional reinforcing.

Joist Depth (in.)	Roof Truss Span (ft)	Nordic Brick Ledge Cantilever (up to 5" cantilever) Methods Allowed							
		Roof loading: LL = 20 PSF, DL = 15 PSF				Roof loading: LL = 30 PSF, DL = 15 PSF			
		Joist Spacing (in.)				Joist Spacing (in.)			
		12"	16"	19.2"	24"	12"	16"	19.2"	24"
9½"	26	N	N	N	1	N	N	N	2
	28	N	N	N	1	N	N	1	2
	30	N	N	N	1	N	N	1	2
	32	N	N	N	1	N	N	1	X
	34	N	N	N	2	N	N	2	X
	36	N	N	1	2	N	1	2	X
11⅞"	26	N	N	N	1	N	N	N	1
	28	N	N	N	1	N	N	1	1
	30	N	N	N	1	N	N	1	1
	32	N	N	N	1	N	N	1	2
	34	N	N	N	1	N	N	1	2
	36	N	N	N	1	N	N	1	2
	38	N	N	1	1	N	1	1	X
14"	26	N	N	N	N	N	N	N	N
	28	N	N	N	N	N	N	N	N
	30	N	N	N	N	N	N	N	N
	32	N	N	N	N	N	N	N	N
	34	N	N	N	N	N	N	N	N
	36	N	N	N	N	N	N	N	1
	38	N	N	N	N	N	N	N	1
	40	N	N	N	N	N	N	N	1
16"	26	N	N	N	N	N	N	N	N
	28	N	N	N	N	N	N	N	N
	30	N	N	N	N	N	N	N	N
	32	N	N	N	N	N	N	N	N
	34	N	N	N	N	N	N	N	1
	36	N	N	N	N	N	N	N	1
	38	N	N	N	N	N	N	N	1
	40	N	N	N	N	N	N	N	1
	42	N	N	N	N	N	N	1	1

Source: Nordic Engineered Wood Residential Construction Guide. N-U101/April 2009.

N = No reinforcement required.

1 = NI reinforced with 23/32" wood structural panel on one side only.

2 = NI reinforced with 23/32" wood structural panel on both sides, or double I-joist.

X = Try a deeper joist or closer spacing.

Applies to joists 12" to 24" o. c. that meet the floor span requirements for a design LL of 40 PSF and DL of 10 PSF, and a live load deflection of L/480. Use 12" o. c. requirements for lesser spacing.

For conventional roof cponstruction using a ridge beam, the roof truss span column above is equivalent to the distance between the supporting wall and the ridge beam. When the roof is framed using a ridge board, the roof truss span is equivalent to the distance between the supporting walls as if a truss is used.

Cantilevered joists supporting girder trusses or roof beams may require additional reinforcing.

Nordic Hole Charts

Joist Depth	Joist Series	Nordic I-Joist Hole Charts: I-Joist Series NI - 20, NI - 40X, NI - 60.														
		Round Hole Diameter (in.) Simple or Multiple Span.														
		2	3	4	5	6	6¼	7	8	8⅝	9	10	10¾	11	12	12¾
9½"	NI-20	0'-6"	1'-0"	2'-6"	3'-6"	5'-6"	6'-0"	N/A	N/A	N/A	N/A	N/A	N/A	N/A	N/A	N/A
	NI-40X	0'-6"	1'-6"	3'-0"	4'-6"	6'-0"	6'-6"	N/A	N/A	N/A	N/A	N/A	N/A	N/A	N/A	N/A
	NI-60	1'-6"	2'-6"	4'-0"	5'-6"	7'-0"	7'-6"	N/A	N/A	N/A	N/A	N/A	N/A	N/A	N/A	N/A
11⅞"	NI-20	0'-6"	0'-6"	0'-6"	1'-0"	3'-0"	3'-0"	4'-6"	6'-6"	7'-6"	N/A	N/A	N/A	N/A	N/A	N/A
	NI-40X	0'-6"	0'-6"	1'-6"	2'-6"	4'-0"	4'-6"	5'-6"	7'-0"	8'-0"	N/A	N/A	N/A	N/A	N/A	N/A
	NI-60	0'-6"	1'-6"	3'-0"	4'-6"	5'-6"	6'-0"	7'-6"	9'-0"	10'-0"	N/A	N/A	N/A	N/A	N/A	N/A
14"	NI-40X	0'-6"	0'-6"	0'-6"	1'-0"	2'-6"	2'-6"	3'-6"	5'-0"	6'-0"	6'-6"	8'-0"	10'-0"	N/A	N/A	N/A
	NI-60	0'-6"	0'-6"	1'-6"	3'-0"	4'-0"	4'-6"	5'-6"	7'-0"	8'-0"	8'-6"	10'-6"	12'-0"	N/A	N/A	N/A
16"	NI-60	0'-6"	0'-6"	0'-6"	0'-6'	1'-6"	2'-0"	3'-0"	4'-6"	5'-6"	6'-0"	8'-0"	9'-6"	10'-0"	12'-0"	14'-0"

All values show minimum distance from inside face of any support to center of hole (ft-in.).

Above table may be used for I-joist spacing of 24 inches on center or less.

For continuous joists with more than one span, use the **longest** span to determine hole location in either span.

Distances are based on uniformly loaded floor joists that meet the span requirements for a design live load of 40 PSF (pounds per square foot) and dead load of 10 PSF, and a live load deflection limit of L/480.

Joist Depth	Joist Series	Duct Chase Opening Sizes and Locations - Simple Span Only.								
		Duct Chase Length (in.)								
		8	10	12	14	16	18	20	22	24
9½"	NI-20	4'-6"	5'-0"	5'-0"	5'-6"	6'-0"	6'-6"	7'-0"	7'-6"	8'-0"
	NI-40X	5'-6"	6'-0"	6'-0"	6'-6"	7'-0"	7'-6"	8'-0"	8'-6"	9'-0"
	NI-60	5'-6"	6'-0"	6'-6"	7'-0"	7'-0"	7'-6"	8'-0"	8'-6"	9'-0"
11⅞"	NI-20	6'-0"	6'-6"	7'-0"	7'-6"	7'-6'	8'-0"	8'-6"	9'-0"	9'-6"
	NI-40X	7'-0"	7'-6"	8'-0"	8'-6"	9'-0"	9'-6"	10'-0"	10'-6"	11'-0"
	NI-60	7'-6"	8'-0"	8'-0'	8'-6"	9'-0"	9'-6"	10'-0"	10'-6"	11'-6"
14"	NI-40X	8'-0"	8'-6"	9'-0"	9'-6"	10'-6'	11'-0"	11'-6"	12'-6	N/A
	NI-60	9'-0"	9'-6"	10'-0"	10'-6'	11'-0"	11'-6"	12'-0"	12'-6"	N/A
16"	NI-60	10'-6"	11'-0"	11'-0"	12'-0"	12'-6"	13'-0"	13'-6"	14'-6"	N/A

The above table is based on simple spans only.

Distances are based on uniformly loaded floor joists that meet the span requirements for a design live load of 40 PSF (pounds per square foot) and dead load of 10 PSF, and a live load deflection limit of L/480.

Source: Nordic (2009) Nordic Engineered Wood Residential Design - Construction Guide. N-U101. April 2009.

Nordic Hole Charts

Rules for cutting holes at duct chase openings:
Whenever possible, field-cut holes should be centered on the middle of the web.
The maximum size hole of the maximum depth of a duct chase opening that can be cut into an I-joist web shall equal the clear distance between the flanges minus ¼". A minimum of ⅛" should always be maintained between the top or bottom of the hole or opening and the adjacent I-joist flange.
The sides of square holes or longest sides of rectangular holes should not exceed ¾ of the diameter of the maximum round holes permitted at that location.
Where more than one hole is necessary, the distance between adjacent hole edges shall exceed twice the diameter of the largest round hole or twice the size of the largest square hole (or twice the length of the longest side of the longest rectangular hole or duct chase opening) and each hole and duct chase opening shall be sized and located in compliance with the above tables.
A knockout is not considered a hole, and may be utilized anywhere is occurs, and may be ignored for purposes of caluclating minimum distances between holes and/or duct chase openings.
Holes measuring ≤ 1½" are permitted anywhere in a cantilevered section of a joist. Holes of greater size need RDP verification.
Holes measuring ≤ 1½" can be placed anywhere in the web provided that it meets the requirements of hole separation above.
For continuous joists with more than one span, use the longest span to determine hole location in either span.
All holes and duct chase openings shall be cut in a workman-like manner according with the restrictions above.
There is a limit of three maximum size holes and one duct chase opening per span.
A group of round holes at approximately the same location shall be permitted if they meet the requirements for a single round hole circumscribed around them.
Source: Nordic (2009) Nordic Engineered Wood Residential Design - Construction Guide. N-U101. April 2009.

Nordic I-Joist Hole Chart

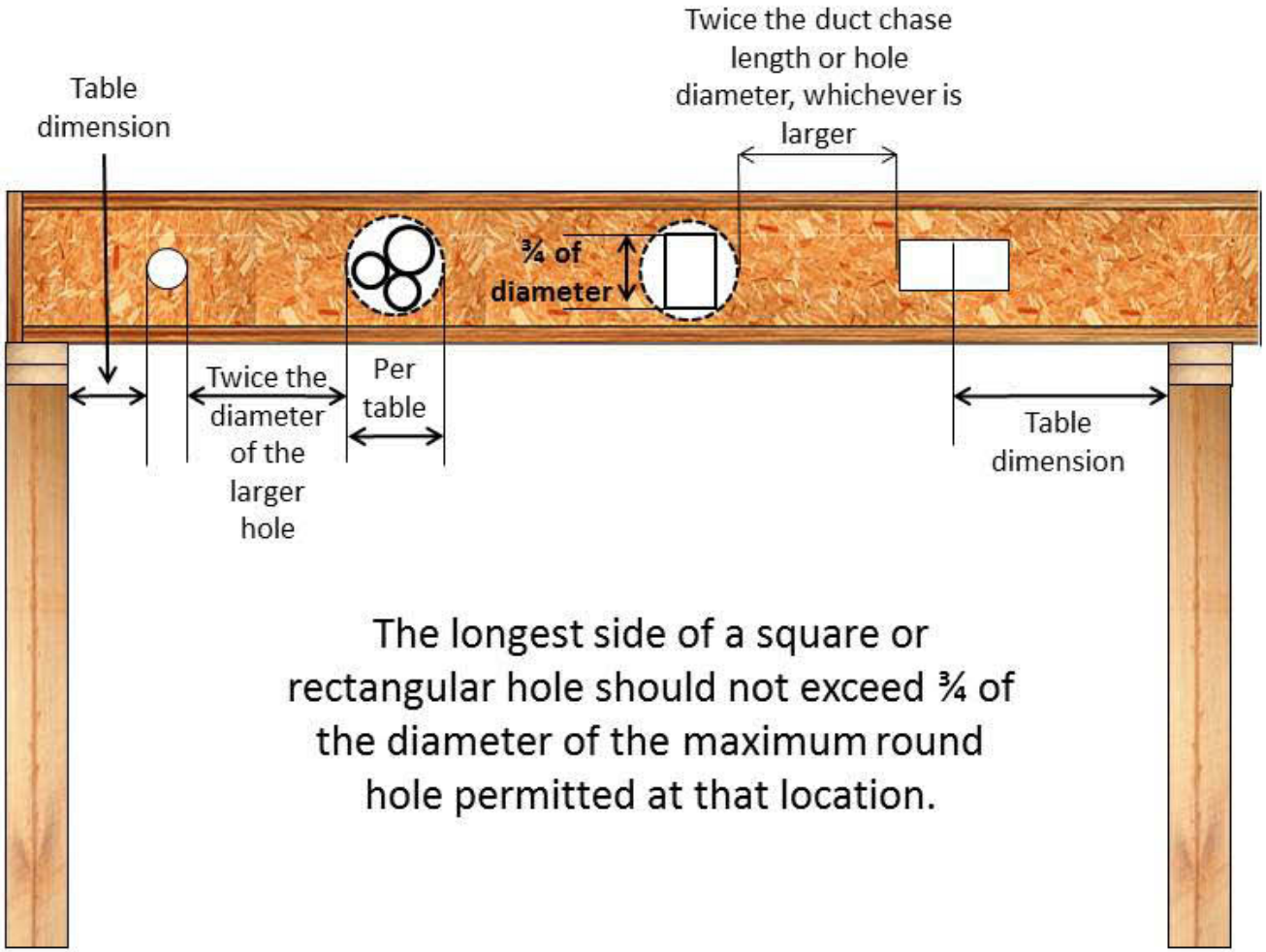

Source: Nordic (2009) Construction Guide http://nordicewp.com/literatures/N-303_Const_Details_Apr_2009.pdf

Nordic Joist I-Joist Basics

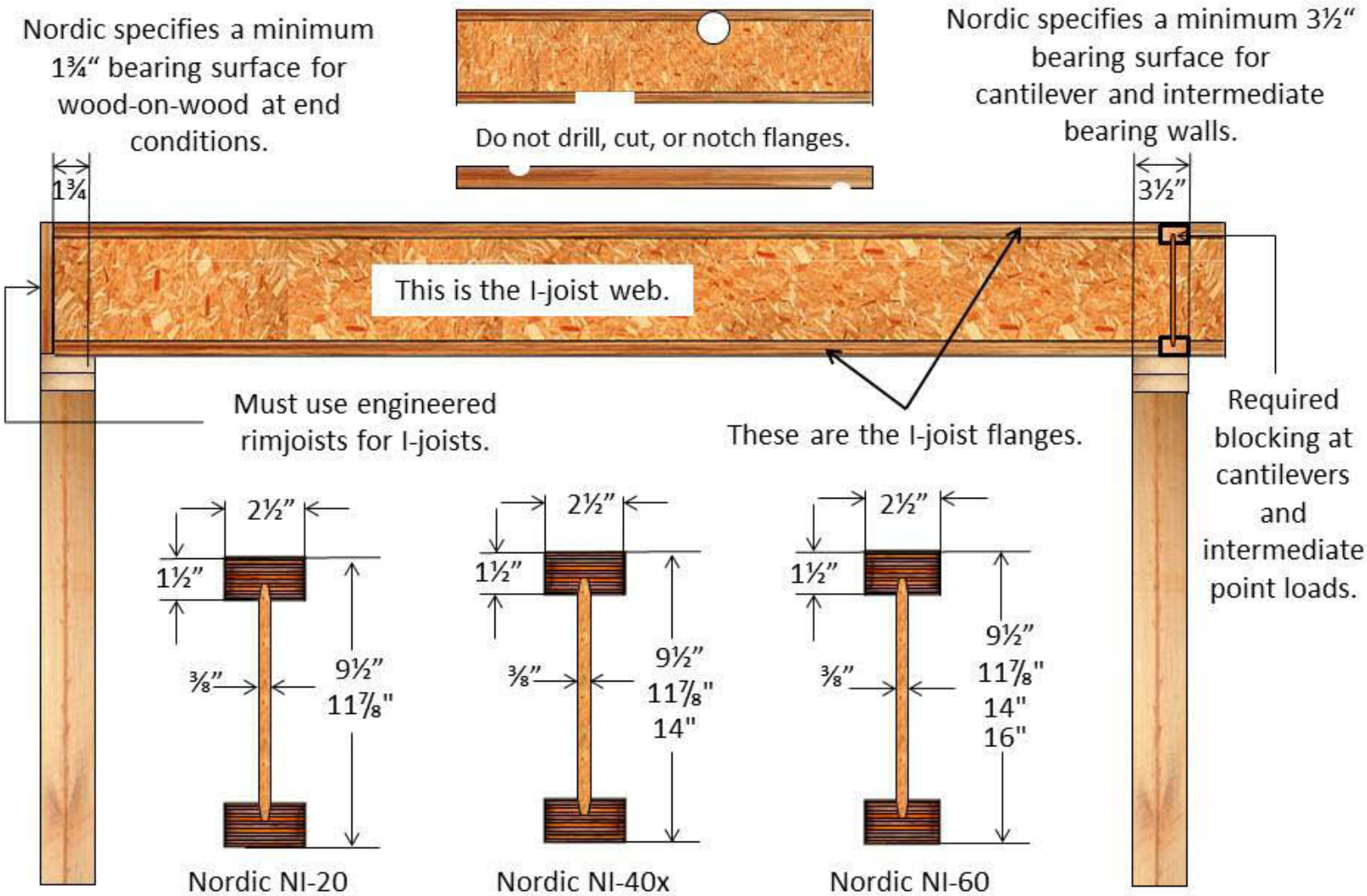

Source: Nordic (2009) Construction Guide http://nordicewp.com/literatures/N-303_Const_Details_Apr_2009.pdf

Selected I-joist Hanger Models: Nordic Joist™ I-Joist Series							
Single Joist Hangers: Simpson Strong-Tie (SST)							
Joist Series	Joist Depth	Face Mount	Nailing		Top Mount	Nailing	
			Header	Joist		Header	Joist
NI-20 NI-40X NI-60	9½"	IUS2.56/9.5	8 - 10d	N/A	ITS2.56/9.5	6 - 10d	N/A
	11⅞"	IUS2.56/11.88	10 - 10d	N/A	ITS2.56/11.88	6 - 10d	N/A
	14"	IUS2.56/14	12 - 10d	N/A	ITS2.56/14	6 - 10d	N/A
	16"	IUS2.56/16	14 - 10d	N/A	ITS2.56/16	6 - 10d	N/A

Selected I-joist Hanger Models: Nordic Joist™ I-Joist Series							
Double Joist Hangers: Simpson Strong-Tie (SST)							
Joist Series	Joist Depth	Face Mount	Nailing		Top Mount	Nailing	
			Header	Joist		Header	Joist
NI-20 NI-40X NI-60	9½"	MIU5.12/9	16 - 16d	2 - 10d X 1½"	MIT39.5-2	8 - 16d	2 - 10d X 1½"
	11⅞"	MIU5.12/11	20 - 16d	2 - 10d X 1½"	MIT311.88-2	8 - 16d	2 - 10d X 1½"
	14"	MIU5.12/14	22 - 16d	2 - 10d X 1½"	MIT314-2	8 - 16d	2 - 10d X 1½"
	16"	MIU5.12/16	24 - 16d	2 - 10d X 1½"	MIT5.12/16	8 - 16d	2 - 10d X 1½"
Bold Italic Hangers Need Web Stiffeners							
Leave 1/16" clearance (⅛" maximum) between end of the supported joist and header or hanger.							
Use sloped seat connectors and beveled web stiffeners when joist slope exceeds ¼" per foot.							
Minimum support width for single-and double-joist top mount hangers is 3" (1½" for ITT hangers).							
Minimum support width for face mount hangers with 10d and 16d nails is 1½" and 1¾" respectively.							
When an I-joist is used as a header, all nails must be 10d X 1½".							
16d nails = 0.162" dia. X 3½" long. 10d nails = 0.148" dia. X 3" long. 10d X 1½" nails = 0.148" dia. X 1½" long.							
Support material must be Nordic Lam, engineered lumber, Douglas fir-Larch, Southern Pine, or Spruce-Pine-Fir species.							
Source: Nordic (2009). Nordic Engineered Wood Residential Design and Construction Guide. N-U101/April 2009.							

Selected I-joist Hanger Models: Nordic Joist™ I-Joist Series							
Single Joist Hangers: United Steel Products (USP)							
Joist Series	Joist Depth	Face Mount	Nailing		Top Mount	Nailing	
			Header	Joist		Header	Joist
NI-20 NI-40X NI-60	9½"	THF23925	12 - 10d	2 - 10d X 1½"	TFL2595	6 - 10d	2 - 10d X 1½"
	11⅞"	THF23112	14 - 10d	2 - 10d X 1½"	TFL25118	6 - 10d	2 - 10d X 1½"
	14"	THF23140	18 - 10d	2 - 10d X 1½"	TFL2514	6 - 10d	2 - 10d X 1½"
	16"	THF23160	22 - 10d	2 - 10d X 1½"	TFL2516	6 - 10d	2 - 10d X 1½"

Selected I-joist Hanger Models: Nordic Joist™ I-Joist Series							
Double Joist Hangers: United Steel Products (USP)							
Joist Series	Joist Depth	Face Mount	Nailing		Top Mount	Nailing	
			Header	Joist		Header	Joist
NI-20 NI-40X NI-60	9½"	***THF25925-2***	12 - 10d	6 - 10d	***THO25950-2***	10 - 16d	6 - 10d
	11⅞"	***THF25112-2***	16 - 10d	6 - 10d	***THO25118-2***	10 - 16d	6 - 10d
	14"	***THF25140-2***	20 - 10d	6 - 10d	***THO25140-2***	12 - 16d	6 - 10d
	16"	***THF25160-2***	24 - 10d	6 - 10d	***THO25160-2***	12 - 16d	6 - 10d
Bold Italic Hangers Need Web Stiffeners							
Leave 1/16" clearance (⅛" maximum) between end of the supported joist and header or hanger.							
Use sloped seat connectors and beveled web stiffeners when joist slope exceeds ¼" per foot.							
Minimum support width for single-and double-joist top mount hangers is 3" (1½" for ITT hangers).							
Minimum support width for face mount hangers with 10d and 16d nails is 1½" and 1¾" respectively.							
When an I-joist is used as a header, all nails must be 10d X 1½".							
16d nails = 0.162" dia. X 3½" long. 10d nails = 0.148" dia. X 3" long. 10d X 1½" nails = 0.148" dia. X 1½" long.							
Support material must be Nordic Lam, engineered lumber, Douglas fir-Larch, Southern Pine, or Spruce-Pine-Fir species.							
Source: Nordic (2009). Nordic Engineered Wood Residential Design and Construction Guide. N-U101/April 2009.							

Selected I-joist Hanger Models: Nordic Joist™ I-Joist Series				
Variable Slope Seat Connectors: Simpson Strong-Tie (SST)				
Joist Series	Joist Depth	Seat Model #	Nailing	
			Header	Joist
NI-20 NI-40X NI-60	9½"	No model specified.		
	11⅞"			
	14"			
	16"			

Selected I-joist Hanger Models: Nordic Joist™ I-Joist Series				
Face Mount Skewed 45° Joist Hanger: Simpson Strong-Tie (SST)				
Joist Series	Joist Depth	Model #	Nailing	
			Header	Joist
NI-20 NI-40X NI-60	9½"	SUR/L2.56/9	14 - 16d	2 - 10d X 1½"
	11⅞"	SUR/L2.56/11	16 - 16d	2 - 10d X 1½"
	14"	SUR/L2.56/14	18 - 16d	2 - 10d X 1½"
	16"	***SUR/L2.56/14***	18 - 16d	2 - 10d X 1½"

Selected I-joist Hanger Models: Nordic Joist™ I-Joist Series				
Variable Slope & Skew Joist Hanger: Simpson Strong-Tie (SST)				
Joist Series	Joist Depth	Face Mount Model Only	Nailing	
			Header	Joist
NI-20 NI-40X NI-60	9½"	***LSSUH310***	18 - 16d	2 - 10d X 1½"
	11⅞"		18 - 16d	2 - 10d X 1½"
	14"		18 - 16d	2 - 10d X 1½"
	16"		18 - 16d	2 - 10d X 1½"

Bold Italic Hangers Need Web Stiffeners
Leave 1/16" clearance (⅛" maximum) between end of the supported joist and header or hanger.
Use sloped seat connectors and beveled web stiffeners when joist slope exceeds ¼" per foot.
Minimum support width for single-and double-joist top mount hangers is 3" (1½" for ITT hangers).
Minimum support width for face mount hangers with 10d and 16d nails is 1½" and 1¾" respectively.
When an I-joist is used as a header, all nails must be 10d X 1½".
16d nails = 0.162" dia. X 3½" long. 10d nails = 0.148" dia. X 3" long. 10d X 1½" nails = 0.148" dia. X 1½" long.
Support material must be Nordic Lam, engineered lumber, Douglas fir-Larch, Southern Pine, or Spruce-Pine-Fir species.
Source: Nordic (2009). Nordic Engineered Wood Residential Design and Construction Guide. N-U101/April 2009.

Nordic Joist™ I-Joist Roof Spans.										
Snow load = 20 pounds per square foot (PSF), Dead load = 15 PSF.										
Snow load deflection limit = L/240, Total load deflection = L/180.										
Joist Depth	Joist Series	Slope of ¼:12 to 4:12			Slope of > 4:12 to 8:12			Slope of > 8:12 to 12:12		
		On Center Spacing (o.c.)			On Center Spacing (o.c.)			On Center Spacing (o.c.)		
		12"	16"	24"	12"	16"	24"	12"	16"	24"
9½"	NI-20	22'-0"	19'-11"	17'-4"	20'-8"	18'-9"	16'-3"	19'-1"	17'-3"	15'-0"
	NI-40X	25'-3"	22'-10"	19'-1"	23'-8"	21'-6"	18'-6"	21'-10"	19'-10"	17'-3"
	NI-60	25'-9"	23'-4"	20'-3"	24'-2"	21'-11"	19'-0"	22'-4"	20'-2"	17'-7"
11⅞"	NI-20	26'-7"	24'-1"	20'-6"	25'-0"	22'-7"	19'-8"	23'-0"	20'-10"	18'-2"
	NI-40X	30'-2"	26'-8"	21'-9"	28'-4"	25'-8"	21'-1"	26'-2"	23'-9"	20'-3"
	NI-60	30'-10"	27'-11"	24'-4"	29'-0"	26'-3"	22'-10"	26'-9"	24'-3"	21'-1"
14"	NI-40X	33'-10"	29'-4"	23'-10"	32'-2"	28'-5"	23'-2"	29'-8"	26'-11"	22'-3"
	NI-60	35'-2"	31'-10"	27'-5"	33'-0"	29'-11"	26'-0"	30'-6"	27'-8"	24'-0"
16"	NI-60	39'-1"	35'-5"	29'-6"	36'-9"	33'-3"	28'-8"	33'-11"	30'-8"	26'-9"
Source: Nordic (2009). N-U101/ April 2009										
Snow load = 30 pounds per square foot (PSF), Dead load = 15 PSF.										
Snow load deflection limit = L/240, Total load deflection = L/180.										
Joist Depth	Joist Series	Slope of ¼:12 to 4:12			Slope of > 4:12 to 8:12			Slope of > 8:12 to 12:12		
		On Center Spacing (o.c.)			On Center Spacing (o.c.)			On Center Spacing (o.c.)		
		12"	16"	24"	12"	16"	24"	12"	16"	24"
9½"	NI-20	20'-3"	18'-4"	15'-11"	19'-1"	17'-3"	15'-0"	17'-8"	16'-0"	13'-11"
	NI-40X	23'-2"	20'-8"	16'-10"	21'-10"	19'-10"	16'-5"	20'-4"	18'-5"	15'-11"
	NI-60	23'-8"	21'-5"	18'-7"	22'-4"	20'-2"	17'-6"	20'-8"	18'-9"	16'-3"
11⅞"	NI-20	24'-5"	22'-2"	18'-1"	23'-0"	20'-10"	17'-8"	21'-5"	19'-4"	16'-10"
	NI-40X	27'-3"	23'-7"	19'-2"	26'-2"	23'-0"	18'-9"	24'-4"	22'-0"	18'-2"
	NI-60	28'-4"	25'-8"	22'-0"	26'-9"	24'-3"	21'-1"	24'-10"	22'-6"	19'-7"
14"	NI-40X	29'-11"	25'-10"	21'-1"	29'-2"	25'-3"	20'-7"	27'-7"	24'-5"	19'-11"
	NI-60	32'-4"	29'-3"	24'-2"	30'-6"	27'-7"	23'-7"	28'-4"	25'-8"	22'-4"
16"	NI-60	35'-11"	32'-0"	26'-1"	33'-11"	30'-8"	25'-5"	31'-5"	28'-6"	24'-8"
Clear spans include a cantilever of up to 24" o.c. on one end of the I-joist. Values based on uniform loads only.										
Minimum bearing length = 1¾" for end bearings, and 3½" for end bearing adjacent to cantilever.										
Bearing stiffeners are not required for the spans listed, except as may be required for hangers.										

Filler Block Requirements for Nordic Doubled I-Joist Construction		
Flange Width	**Net Depth**	**Filler Block Size**
2½" X 1½"	9½"	2⅛" X 6"
	11 ⅞"	2⅛" X 8"
	14"	2⅛" X 10"
	16"	2⅛" X 12"
3½" X 1½"	9½"	3" X 6"
	11 ⅞"	3" X 8"
	14"	3" X 10"
	16"	3" X 12"
3½" X 2"	11 ⅞"	3" X 7"
	14"	3" X 9"
	16"	3" X 11"
Source: Nordic (2009)		

Support back of I-joist during nailing to prevent damage to web/flange connection.
Leave a ⅛" gap between the top of the filler block and the bottom of the top I-joist flange.
Filler blocking is required between joists for full length of span.
Nail joists together with two rows of 10d nails at 12" 0.c. (clinched when possible) on each side of the doubled I-joist. Total of four nails per foot required. If nails can be clinched, only two per foot are required.

Nordic Joist™ I-Joist Roof Spans.										
Snow load = 20 pounds per square foot (PSF), Dead load = 15 PSF.										
Snow load deflection limit = L/240, Total load deflection = L/180.										
Joist Depth	Joist Series	Slope of ¼:12 to 4:12			Slope of > 4:12 to 8:12			Slope of > 8:12 to 12:12		
		On Center Spacing (o.c.)			On Center Spacing (o.c.)			On Center Spacing (o.c.)		
		12"	16"	24"	12"	16"	24"	12"	16"	24"
9½"	NI-20	22'-0"	19'-11"	17'-4"	20'-8"	18'-9"	16'-3"	19'-1"	17'-3"	15'-0"
	NI-40X	25'-3"	22'-10"	19'-1"	23'-8"	21'-6"	18'-6"	21'-10"	19'-10"	17'-3"
	NI-60	25'-9"	23'-4"	20'-3"	24'-2"	21'-11"	19'-0"	22'-4"	20'-2"	17'-7"
11⅞"	NI-20	26'-7"	24'-1"	20'-6"	25'-0"	22'-7"	19'-8"	23'-0"	20'-10"	18'-2"
	NI-40X	30'-2"	26'-8"	21'-9"	28'-4"	25'-8"	21'-1"	26'-2"	23'-9"	20'-3"
	NI-60	30'-10"	27'-11"	24'-4"	29'-0"	26'-3"	22'-10"	26'-9"	24'-3"	21'-1"
14"	NI-40X	33'-10"	29'-4"	23'-10"	32'-2"	28'-5"	23'-2"	29'-8"	26'-11"	22'-3"
	NI-60	35'-2"	31'-10"	27'-5"	33'-0"	29'-11"	26'-0"	30'-6"	27'-8"	24'-0"
16"	NI-60	39'-1"	35'-5"	29'-6"	36'-9"	33'-3"	28'-8"	33'-11"	30'-8"	26'-9"
Source: Nordic (2009). N-U101/ April 2009										
Snow load = 30 pounds per square foot (PSF), Dead load = 15 PSF.										
Snow load deflection limit = L/240, Total load deflection = L/180.										
Joist Depth	Joist Series	Slope of ¼:12 to 4:12			Slope of > 4:12 to 8:12			Slope of > 8:12 to 12:12		
		On Center Spacing (o.c.)			On Center Spacing (o.c.)			On Center Spacing (o.c.)		
		12"	16"	24"	12"	16"	24"	12"	16"	24"
9½"	NI-20	20'-3"	18'-4"	15'-11"	19'-1"	17'-3"	15'-0"	17'-8"	16'-0"	13'-11"
	NI-40X	23'-2"	20'-8"	16'-10"	21'-10"	19'-10"	16'-5"	20'-4"	18'-5"	15'-11"
	NI-60	23'-8"	21'-5"	18'-7"	22'-4"	20'-2"	17'-6"	20'-8"	18'-9"	16'-3"
11⅞"	NI-20	24'-5"	22'-2"	18'-1"	23'-0"	20'-10"	17'-8"	21'-5"	19'-4"	16'-10"
	NI-40X	27'-3"	23'-7"	19'-2"	26'-2"	23'-0"	18'-9"	24'-4"	22'-0"	18'-2"
	NI-60	28'-4"	25'-8"	22'-0"	26'-9"	24'-3"	21'-1"	24'-10"	22'-6"	19'-7"
14"	NI-40X	29'-11"	25'-10"	21'-1"	29'-2"	25'-3"	20'-7"	27'-7"	24'-5"	19'-11"
	NI-60	32'-4"	29'-3"	24'-2"	30'-6"	27'-7"	23'-7"	28'-4"	25'-8"	22'-4"
16"	NI-60	35'-11"	32'-0"	26'-1"	33'-11"	30'-8"	25'-5"	31'-5"	28'-6"	24'-8"
Clear spans include a cantilever of up to 24" o.c. on one end of the I-joist. Values based on uniform loads only.										
Minimum bearing length = 1¾" for end bearings, and 3½" for end bearing adjacent to cantilever.										
Bearing stiffeners are not required for the spans listed, except as may be required for hangers.										