178
118

STUDY OF PHOTOGRAMMETRIC SELF-CALIBRATION ADJUSTMENT METHOD

by

Barrington Long

Thesis submitted to the Faculty of the

Virginia Polytechnic Institute and State University

in partial fulfillment of the requirements for the degree of

MASTER OF SCIENCE

in

Civil Engineering

APPROVED:

S. D. Johnson, Chairman

J. R. Baker

L. U. Bender

May, 1990

Blacksburg, Virginia

STUDY OF PHOTOGRAMMETRIC SELF-CALIBRATION ADJUSTMENT METHOD

by

Barrington Long

Committee Chairman: Steven D. Johnson
Civil Engineering

(ABSTRACT)

The development of a viable self-calibration approach for use with non-metric cameras was investigated. Both computer generated and actual test camera data were generated to determine the effectiveness of the math model and computer program.

A twenty-seven parameter bundle adjustment routine was proposed because of its versatility and compatible use in an existing aerotriangulation package. For the camera and test configuration considered, the focal length was recovered to within two percent, and the principal point location was recovered to within 0.3 to twelve percent. When the computer generated data was used, the focal length and principal point offset were recovered to within 0.2 percent.

Modeling and software has been made available for a future comparative study between the self-calibration and

Direct Linear Transformation adjustment parameters. The self-calibration modeling and former Direct Linear Transformation modeling software is a promising tool for mensuration tests and experiments with video and Charge Coupled Device (CCD) imagery.

ACKNOWLEDGEMENTS

I wish to thank Dr. Steven D. Johnson for his comments and advise and for aiding me with the use of the aerotriangulation programs which were modified as part of this research. I would also like to thank Dr. James R. Baker and Dr. Lee U. Bender for their recommendations and assistance.

Special appreciation goes to my parents, Mr. and Mrs. Robert S. Long, whose support was invaluable throughout the course of my graduate program.

TABLE OF CONTENTS

LIST OF FIGURES

LIST OF TABLES

LIST OF PHOTOGRAPHS

CHAPTER 1

INTRODUCTION

1.1 Problem Definition

Non-metric cameras have an advantage over metric cameras because they are more versatile and significantly cheaper. The recent advances in data analysis and reduction schemes have allowed non-metric cameras to become increasingly popular in close-range photogrammetric systems; they do, however, have their disadvantages. These include instability, poorly characterized geometry, and unknown imaging behavior. A thorough calibration scheme is necessary before non-metric cameras can be used to perform metric work.

A method of self-calibration for non-metric cameras is needed so that the capability and software are available for further studies. Once software is developed, the self-calibration method, which utilizes object photography and defined object points, may then be compared to the Direct Linear Transformation (DLT) approach. The DLT method is an analytical procedure where the comparator coordinates of image points are directly transformed into object space coordinates without fiducial marks or initial approximations of the inner and outer orientation elements of the photograph. Use of video and Charge Coupled Device

(CCD) systems can then be utilized in mensuration tests and experiments. The distortions in video imagery might be corrected by using either the self-calibration adjustment parameters or the DLT parameters.

1.2 Objective

The objective of this thesis was to develop a self-calibration system for non-metric cameras for use in close-range photogrammetry. Emphasis was placed on a self-calibration approach that was used in conjunction with a bundle adjustment routine. The purpose of this research was to find an adjustment model and use it in a software system to determine its accuracy potential in an actual test case.

Fictitious data generated from a spread sheet program and actual measured data collected from a 35 mm Nikon FM2 imagery camera were used to conduct some practical tests. Photographs were taken of a small model and the paper prints were measured with a digitizer. The data were loaded into computer files and an adjustment which included the self-calibration procedure was run through a simultaneous bundle adjustment routine.

The computed model coordinates were then compared to the known model coordinates. Fine tuning of the system followed until a desired level of accuracy was achieved.

1.3 Thesis Organization

A number of different solutions for the calibration of non-metric cameras have previously been developed. This thesis summarizes a few of those approaches, with emphasis placed on the self-calibration procedures. Theories and practical math models developed by a variety of researchers are discussed in Chapter 2. Math models and descriptions of test fields are included to show the steps taken and equipment needed for non-metric camera calibration.

The scope of the paper is limited to a workable self-calibrating process that can eventually be employed in actual photogrammetric work. Discussion of concepts of the simultaneous bundle solution is also included.

Chapter 2 contains a selection of approaches to self-calibration. Some pre-calibration is assumed in a few of the techniques, but the bulk of the chapter deals with self-calibration itself. Chapter 3 contains the development of a chosen self-calibration math model, descriptions of experiments, and results obtained. Chapter 4 enumerates conclusions from this thesis and discusses some recommendations. Appendix A provides the fundamental background on the collinearity equations from which many of the methods are based. Appendix B contains program listings, sample runs, and data. Throughout the thesis,

matrix names are printed in bold letters, and submatrices usually appear as capital letter variables but are not printed in bold letters.

CHAPTER 2

LITERATURE AND BACKGROUND REVIEW

2.1 Introduction

Researchers and photogrammetrists have developed a number of methods that solve for the instability of non-metric cameras. These models utilize the coplanarity condition, radial and decentering distortion, minimum object space control, and multiple camera bundle adjustments. The methods account for variations of lens distortion within the photographic field, and include mixed block- and camera-invariant additional parameter sets.

A survey of selected calibration procedures for non-metric cameras is included within this chapter. The procedures describe different approaches that may be taken to determine the additional parameters necessary to find the orientational elements of non-metric cameras.

2.2 Self Calibration With the Coplanarity Condition and Minimum Object Space Control

Dr. I. Wolfgang Faig (1975) states that calibration provides the link between metric and non-metric cameras. Non-metric cameras are characterized by an interior orientation that is partially or completely unknown and potentially unstable. Interior orientation includes the

basic parameters of principal point, principal distance, radial lens distortion, decentering lens distortion, film deformation, and affinity. Non-perpendicularity of the comparator axes can also be included in the system for calibration.

A method of self calibration for non-metric, close-range cameras, named after the University of New Brunswick, was presented by Dr. Faig (1975). This method provides the interior orientation parameters and incorporates decentering and radial lens distortions, affinity, and non-perpendicularity of axes. A minimum control of two horizontal and three vertical points is required to carry out the adjustment routine.

The University of New Brunswick (UNB) self calibration approach is based on the coplanarity condition, and requires at least one overlapping stereo photo pair. The parameters that describe the bundle of image rays of a single photograph are determined for each photograph by the expected changes in interior orientation.

In Figure 2.1 the base vector between two camera stations is described by

$$\mathbf{B} = \begin{bmatrix} B_X \\ B_Y \\ B_Z \end{bmatrix} = \begin{bmatrix} {}_2XL - {}_1XL \\ {}_2YL - {}_1YL \\ {}_2ZL - {}_1ZL \end{bmatrix} \tag{2.1}$$

and the vector A′ is shown by

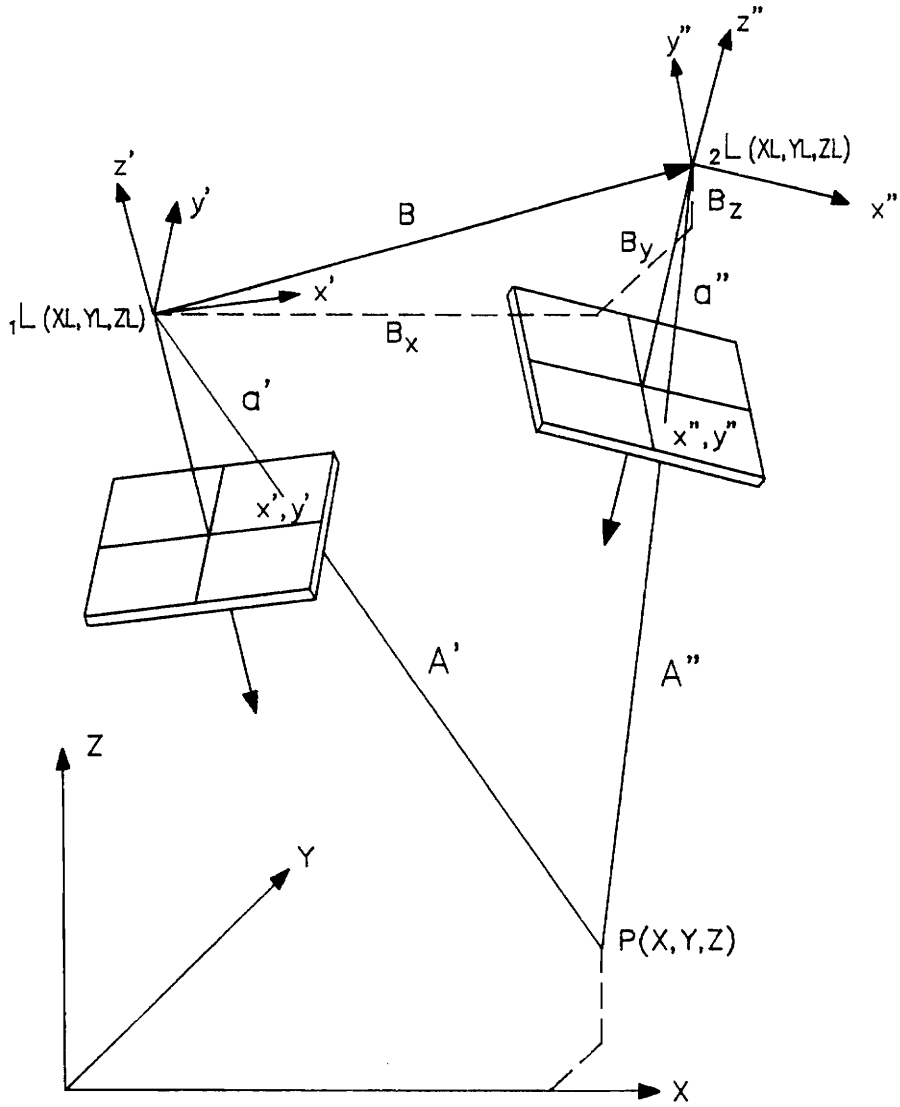

Figure 2.1 Geometry of Photography (adapted from Faig, 1975).

$$\mathbf{A'} = \begin{bmatrix} A_{x'} \\ A_{y'} \\ A_{z'} \end{bmatrix} = \begin{bmatrix} X - {}_2XL \\ Y - {}_2YL \\ Z - {}_2ZL \end{bmatrix}. \tag{2.2}$$

The vector A′ may also be described by the rotational matrix R′, the photo coordinate vector a′, and the scale factor λ′ as

$$\mathbf{A'} = \begin{bmatrix} X - {}_2XL \\ Y - {}_2YL \\ Z - {}_2ZL \end{bmatrix} = \lambda' \ \mathbf{R'} \begin{bmatrix} x' - x_1L \\ y' - y_1L \\ 0 - z_1L \end{bmatrix} = \lambda' \ \mathbf{a''}. \tag{2.3}$$

Here x′ and y′ are image coordinates of point P, and x_1L, y_1L, and z_1L are the unknown image coordinates of the exposure station that describe the basic parameters of interior orientation, namely principal point and principal distance.

The vector A" which emanates from the camera station ${}_2L$ is expressed as

$$\mathbf{A''} = \begin{bmatrix} A_{x''} \\ A_{y''} \\ A_{z''} \end{bmatrix} = \lambda'' \ \mathbf{R''} \begin{bmatrix} x'' - x_2L \\ y'' - y_2L \\ 0 - z_2L \end{bmatrix} = \lambda'' \ \mathbf{a''}. \tag{2.4}$$

Scale factors λ′ and λ" represent the transformation from object to ground coordinate system. These scale factors must first be approximated and are always initially set to zero. The coplanarity condition is described by

$$\mathbf{G} = \begin{vmatrix} B_x & A_x' & A_x'' \\ B_y & A_y' & A_y'' \\ B_z & A_z' & A_z'' \end{vmatrix} = \lambda' \lambda'' \begin{vmatrix} B_x & a_x' & a_x'' \\ B_y & a_y' & a_y'' \\ B_z & a_z' & a_z'' \end{vmatrix} = 0. \qquad (2.5)$$

The coplanarity condition (2.5) is linearized and used in a least squares solution. A first iteration is done at this point and the parameters of interior orientation are held fixed. Distortion and affinity parameters are included in equations (2.3) and (2.4) which leads to equations

$$\mathbf{a}' = \mathbf{R}' \begin{vmatrix} (x' - x_{1L}) + dr_x' + dp_x' + dg_x' \\ (y' - y_{1L}) + dr_y' + dp_y' + dg_y' \\ -z_{1L} \end{vmatrix} \qquad (2.6)$$

and

$$\mathbf{a}'' = \mathbf{R}'' \begin{vmatrix} (x'' - x_{2L}) + dr_x'' + dp_x'' + dg_x'' \\ (y'' - y_{2L}) + dr_y'' + dp_x'' + dg_y'' \\ -z_{2L} \end{vmatrix} \qquad (2.7)$$

where general expressions are written as

$$dr_x = (x - x_L)\ (k_0 + k_1 r^2 + k_2 r^4 + k_3 r^6) \qquad (2.8)$$
$$dr_y = (y - y_L)\ (k_0 + k_1 r^2 + k_2 r^4 + k_3 r^6) \qquad (2.9)$$

$$dp_x = p_1 (r^2 + 2(x - x_L)^2) + 2p_2 (x - x_L)\ (y - y_L) \qquad (2.10)$$
$$dp_y = p_2 (r^2 + 2(y - y_L)^2) + 2p_1 (x - x_L)\ (y - y_L) \qquad (2.11)$$

$$dg_x = A\ (x - x_L) \qquad (2.12)$$
$$dg_y = B\ (y - y_L). \qquad (2.13)$$

Scale factors λ' and λ'' must next be approximated for the control points. In order to do this the space coordinates of point P are expressed in both systems by

$$\begin{bmatrix} X_P' \\ Y_P' \\ Z_P' \end{bmatrix} = \begin{bmatrix} X_1 L \\ Y_1 L \\ Z_1 L \end{bmatrix} + \lambda' \begin{bmatrix} a_x' \\ a_y' \\ a_z' \end{bmatrix} \tag{2.14}$$

and

$$\begin{bmatrix} X_P'' \\ Y_P'' \\ Z_P'' \end{bmatrix} = \begin{bmatrix} X_2 L \\ Y_2 L \\ Z_2 L \end{bmatrix} + \lambda'' \begin{bmatrix} a_x'' \\ a_y'' \\ a_z'' \end{bmatrix}. \tag{2.15}$$

The parallax condition resulting from coplanarity is expressed as

$$\Phi = (X_P' - X_P'')^2 + (Y_P' - Y_P'')^2 + (Z_P' - Z_P'')^2 = \min \tag{2.16}$$

or

$$\frac{\partial \Phi}{\partial \lambda'} = \frac{\partial \Phi}{\partial \lambda''} = 0. \tag{2.17}$$

Scale factors λ' and λ'' are then solved by

$$(a_x'^2 + a_y'^2 + a_z'^2)\,\lambda' - (a_x' a_x'' + a_y' a_y'' + a_z' a_z'')\,\lambda'' = (B_x a_x' + B_y a_y' + B_z a_z') \tag{2.18}$$

$$(a_x' a_x'' + a_y' a_y'' + a_z' a_z'')\,\lambda' - (a_x''^2 + a_y''^2 + a_z''^2)\,\lambda'' = (B_x a_x'' + B_y a_y'' + B_z a_z''). \tag{2.19}$$

This is followed by the control restraints

$$C_x = XL - \lambda a_x - X_P = 0 \tag{2.20}$$
$$C_y = YL - \lambda a_y - Y_P = 0 \tag{2.21}$$
$$C_z = ZL - \lambda a_z - Z_P = 0 \tag{2.22}$$

rather than using the collinearity equations. Expressions

$$\frac{\partial C_X}{\partial X_L} dXL + \frac{\partial C_X}{\partial \lambda} d\lambda + \frac{\partial C_X}{\partial \omega} d\omega + \frac{\partial C_X}{\partial \phi} d\phi + \frac{\partial C_X}{\partial \kappa} d\kappa + V_{CX} = 0 \quad (2.23)$$

$$\frac{\partial C_Y}{\partial Y_L} dYL + \frac{\partial C_Y}{\partial \lambda} d\lambda + \frac{\partial C_Y}{\partial \omega} d\omega + \frac{\partial C_Y}{\partial \phi} d\phi + \frac{\partial C_Y}{\partial \kappa} d\kappa + V_{CY} = 0 \quad (2.24)$$

$$\frac{\partial C_Z}{\partial Z_L} dZL + \frac{\partial C_Z}{\partial \lambda} d\lambda + \frac{\partial C_Z}{\partial \omega} d\omega + \frac{\partial C_Z}{\partial \phi} d\phi + \frac{\partial C_Z}{\partial \kappa} d\kappa + V_{CZ} = 0 \quad (2.25)$$

incorporate the control restraints in a least squares solution.

The actual adjustment is done in a step by step iterative procedure and the first step's observation equations are functions of

$$V_G = G(X_{1L}, Y_{1L}, Z_{1L}, X_{2L}, Y_{2L}, Z_{2L}, \omega', \phi', \kappa', \omega'', \phi'', \kappa'', x_{1L}, y_{1L}, z_{1L}, x_{2L}, y_{2L}, z_{2L}), \quad (2.26)$$

$$V_{F_1} = F_1(X_{1L}, Y_{1L}, Z_{1L}, \omega', \phi', \kappa'), \quad (2.27)$$

and

$$V_{F_2} = F_2(X_{2L}, Y_{2L}, Z_{2L}, \omega'', \phi'', \kappa''). \quad (2.28)$$

In the second iteration the function G of equation (2.26) is replaced by

$$V_H = H(X_{1L}, Y_{1L}, Z_{1L}, X_{2L}, Y_{2L}, Z_{2L}, \omega', \phi', \kappa', \omega'', \phi'', \kappa'', k_0', k_1', k_2', k_3', k_0'', k_1'', k_2'', k_3'', p_1', p_2', p_1'', p_2'', A', B', A'', B''), \quad (2.29)$$

and its linearized form is again adjusted with V_{F_1} and V_{F_2}. There is no need for full XYZ control points because the control restraint can employ horizontal and vertical control points separately.

Practical tests performed by Faig used a Nikomat-FT 35 mm camera with a 50 mm Nikkor-4 lens. Test objects were photographed using two to six photographs which formed one to thirteen photogrammetric models. The unknowns in the photographs and models established the necessary number of needed pass points. Table 2.1 and Table 2.2 list the results based on the number of photos, object points, and control points.

The UNB method is computer intensive but proves useful when using non-metric cameras as it does not assume constant interior orientation when taking different photographs. The minimum control requirements are easily met. For example, three bolts of predetermined height can be used for control points if they are placed on a plane next to the target object. A ruler or object of known length also located on the plane surface fulfills all the requisites necessary to define the object space coordinate system.

TABLE 2.1* Numbers of Photographs, Models, and Corresponding Measurements.

Photos	Number of Models	Unknowns	Minimum Number of Object Points	Total Point Measurements (e.g., mono-comparison)	Model Point Measurements (stereo plotter)
2	1	34	34	68	34
3	3	51	17	51	51
4	6	68	12	48	72
6	13(11)	102	8(10)	(60)48(60)	104(110)

TABLE 2.2* Results of Test Cases.

Photos	Number of Models	Object Points	Control Points	Photo Scale	Iteration Sequence	RMS in μm (photo scale) for all points	RMS for 24 (x, y, z) Check Points in μm (photo scale) Horizontal	Vertical
2	1	42	10H, 10V	1:15	V_G, V_H	1.7	0.8	0.5
2	1	64	2H, 3V	1:30	V_G	5.3	45.0	27.8
2	1	64	2H, 3V	1:30	V_G, V_H	3.4	46.5	31.1
2	1	64	10H, 10V	1:30	V_G	2.9	2.6	0.3
2	1	64	10H, 10V	1:30	V_G, V_H	2.7	2.5	0.4
3	3	62	2H, 3V	1:30	V_G	9.3	27.4	18.5
3	3	62	2H, 3V	1:30	V_G, V_H	7.5	46.4	24.2
3	3	62	10H, 10V	1:30	V_G	7.0	2.2	0.5
3	3	62	10H, 10V	1:30	V_G, V_H	6.7	1.5	0.3
4	6	61	2H, 3V	1:30	V_G	9.7	38.5	44.9
4	6	61	2H, 3V	1:30	V_G, V_H	7.7	25.6	34.3
4	6	61	10H, 10V	1:30	V_G	6.7	2.0	2.6
4	6	61	10H, 10V	1:30	V_G, V_H	6.4	2.2	1.7
6	11	33	2H, 3V	1:30	V_G	8.4	26.4	60.8
6	11	33	2H, 3V	1:30	V_G, V_H	7.8	18.3	56.1
6	11	33	10H, 10V	1:30	V_G	7.2	5.5	1.0
6	11	33	10H, 10V	1:30	V_G, V_H	6.2	1.2	1.2

* (adapted from Faig, 1975).

2.3 The Determination of Interior Orientation Parameters Using Relative Control Points

A method of camera calibration that uses a three dimensional test object was developed my M. S. Bhatti (1973). The benefit of this method is that it employs a test rig that is inexpensive, lightweight, portable, and that can be disassembled when not in use. Coordinates of the target points and of the camera node are assumed to be unknown. Through the use of the this method, the target and camera coordinates are determined as well as the desired interior orientation parameters.

Figure 2.2 shows the calibration coordinate system. The axes of the space coordinate system are X, Y, and Z with O at the origin. Point L is the exterior perspective center having coordinates (XL,YL,ZL). The image is placed in the positive position so that the interior and exterior perspective centers coincide. Point P is taken as any point in space with coordinates (X,Y,Z) and image coordinates (x,y) as measured from the fiducial center.

The relationships between the photograph, the projective center, and the object space are shown by

$$\frac{x - x_0}{f} = \frac{X'}{Z'} \tag{2.30}$$

$$x = x_0 + f\frac{X'}{Z'} \tag{2.31}$$

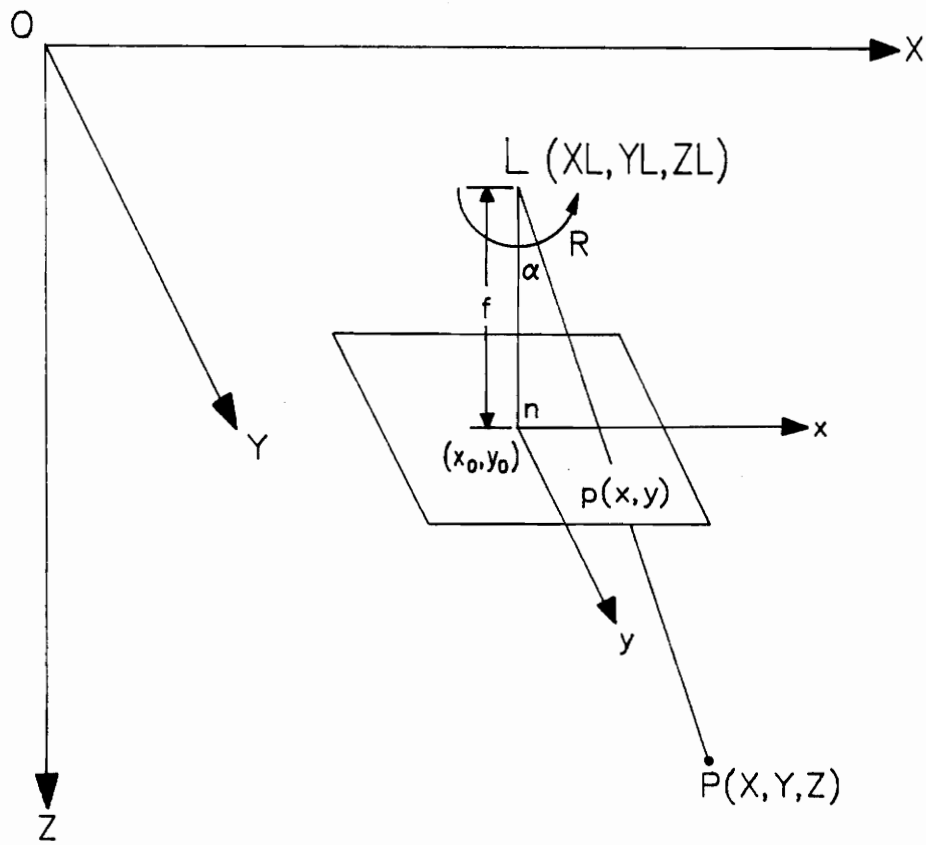

Figure 2.2 The Calibration Coordinate System (adapted from Bhatti, 1973).

$$\frac{y - y_0}{f} = \frac{Y'}{Z'} \tag{2.32}$$

$$y = y_0 + f\frac{Y'}{Z'} \tag{2.33}$$

$$\begin{bmatrix} X' \\ Y' \\ Z' \end{bmatrix} = \mathbf{R} \begin{bmatrix} X - XL \\ Y - YL \\ Z - ZL \end{bmatrix} \tag{2.34}$$

assuming that lines $L_{P(X,Y,Z)}$ and $L_{p(x,y)}$ are collinear. The orthogonal matrix **R** represents a rotation in three dimensions. When the magnitude of the rotation is small it can be expressed in terms of a unit matrix plus a skew symmetric matrix of order three. Substituting for **R** in expression (2.34) gives

$$\begin{bmatrix} X' \\ Y' \\ Z' \end{bmatrix} = \begin{bmatrix} 1 & -\kappa & \phi \\ \kappa & 1 & -\omega \\ -\phi & \omega & 1 \end{bmatrix} \begin{bmatrix} X - XL \\ Y - YL \\ Z - ZL \end{bmatrix} \tag{2.35}$$

and when expanded gives

$$X' = (X - XL) - (Y - YL)\kappa + (Z - ZL)\phi \tag{2.36}$$

$$Y' = (X - XL)\kappa + (Y - YL) - (Z - ZL)\omega \tag{2.37}$$

$$Z' = -(X - XL)\phi + (Y - YL)\omega + (Z - ZL). \tag{2.38}$$

When the values for X', Y', and Z' are replaced into (2.31) and (2.33)

$$x = x_0 + f \frac{(X - XL) - (Y - YL)\kappa + (Z - ZL)\phi}{-(X - XL)\phi + (Y - YL)\omega + (Z - ZL)} \tag{2.39}$$

and

$$y = y_0 + f \frac{(X - XL)\kappa + (Y - YL) - (Z - ZL)\omega}{-(X - XL)\phi + (Y - YL)\omega + (Z - ZL)} \tag{2.40}$$

result.

The above equations (2.39) and (2.40) are linearized and the method of least squares is used for computations. Values of ω, ϕ, and κ are assumed to be small, and terms higher than the second order were disregarded. The partial derivatives of (2.39) and (2.40) were taken and the values placed in (2.31) and (2.33) to create expressions

$$\begin{aligned} dx = {} & dx_0 + \frac{(X - XL)}{(Z - ZL)} df + \frac{f}{(Z - ZL)} dX - f \frac{(X - XL)}{(Z - ZL)^2} dZ \\ & - \frac{f}{(Z - ZL)} dXL + f \frac{(X - XL)}{(Z - ZL)^2} dZL - f \frac{(X - XL)\ (Y - YL)}{(Z - ZL)^2} d\omega \\ & + f \left[1 + \frac{(X - XL)^2}{(Z - ZL)^2} \right] d\phi - f \frac{(Y - YL)}{(Z - ZL)} d\kappa \end{aligned} \tag{2.41}$$

and

$$\begin{aligned} dy = {} & dy_0 + \frac{(Y - YL)}{(Z - ZL)} df + \frac{f}{(Z - ZL)} dY - f \frac{(Y - YL)}{(Z - ZL)^2} dZ \\ & - \frac{f}{(Z - ZL)} dYL + f \frac{(Y - YL)}{(Z - ZL)^2} dZL - f \left[1 + \frac{(Y - YL)^2}{(Z - ZL)^2} \right] d\omega \\ & + f \frac{(X - XL)\ (Y - YL)}{(Z - ZL)^2} d\phi + f \frac{(X - XL)}{(Z - ZL)} d\kappa . \end{aligned} \tag{2.42}$$

The variables dx_0, dy_0, df, dX, dY, dZ, dXL, dYL, dZL, $d\omega$, $d\phi$, and $d\kappa$ are the corrections to the original approximate values.

In

$$dx = (x - x_0) - f\,\frac{X'}{Z'} \tag{2.30}$$

and

$$dy = (y - y_0) - f\,\frac{Y'}{Z'} \tag{2.31}$$

dx and dy are the measured values minus the values computed from the test object coordinates and the approximate orientation parameters. At least one length between two points of the test model is necessary to give absolute values to the parameters.

Certain requirements are necessary for the object points in a three dimensional test setting. If a number of points all lie in a plane where Z is constant, then a minimum of two points from a different plane must be added. The distance of the points in the near and far planes should be maximized to provide a better solution for the unknowns. Because large distances between points provide a stronger solution, it is best to put the test points near the corners of the photograph. An adequate sample of the bundle of rays uniformly distributed over the image area must be provided.

The experimental test rig was a cubical framework structure and each side measured about one meter. It was designed with tension wires to provide a rigid body without dimensional deformation when lifted and turned. Dental drills were used as targets because the spherical shape of the tip (about 1 mm in diameter) was symmetric when photographed from different angles. The drills were mounted into wooden blocks and placed inside the corners of the cube so that the tips were facing inward.

As a practical example the method was applied to calibrate a Galileo-Santoni "A" stereometric camera. The camera was set up at approximately two meters from the center of the cube with the height of the camera approximately equal to the height of the center of the cube. Seven photographs were taken of the test rig as it was rotated about the X and Y axes. One known length between test objects was needed to perform the computations.

Measurements were done on a Hilger and Watts stereocomparator. From the seven photographs, each with eight targets, 112 observation equations were formed with 62 unknowns. The method of least squares was applied to compute the unknown values and the Cholesky method was utilized to solve the normal equations. Computations were done on an IBM 360 computer with an iterative procedure that converged after the second iteration.

The method developed by Bhatti appeared to work well with near vertical photography but has severe limitations. His method is predicated upon the near alignment of the object and image space systems and thus limits its use in self-calibration.

2.4 Calibration of Non-Metric Cameras for Pavement Study

Two single-lens-reflex 35 mm Nikon F's with 35 mm lenses were calibrated for a pavement surface texture study (Apostolos and Mann, 1984). For the desired accuracy, the parameters of focal length, principal point location, and symmetric radial lens distortion were needed. Four fiducial marks were cut into the film mask to determine the principal point location (Figure 2.3). The relative location of the fiducial marks were then determined for each camera.

The target field contained a precise one-inch grid that surrounded the object area. Eight oblique photographs were taken of the test field with each camera. Of the approximate one hundred visible intersections in the target area only approximately half were common to all eight exposures on each camera.

The eight film negatives were placed in a stereo-comparator and the target intersections were measured. Coordinate values were corrected in the Image Coordinate Refinement Program of the California Department

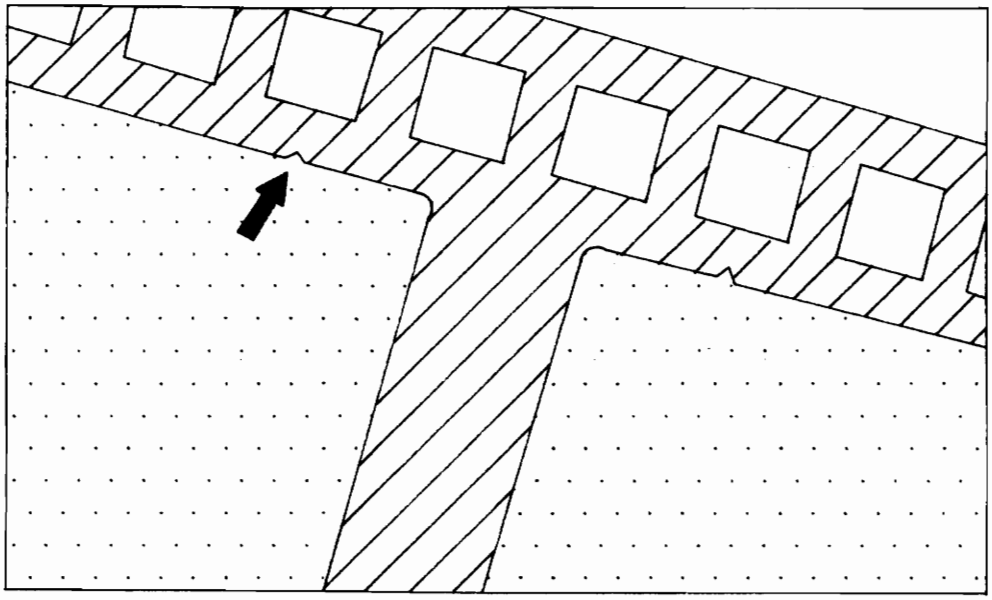

Figure 2.3 Fiducial Marks on Exposed Film (adapted from Apostolos and Mann, 1984).

of Transportation. The Small Block Adjustment Program was then used for the refined image coordinates which began with initial approximations for the exterior orientation parameters of all eight camera positions. The program utilizes the linearized collinearity condition and performs a simultaneous adjustment with up to 25 photographs. Both Nikons were calibrated in this manner for principal distance, principal point location, and symmetric lens distortion.

2.5 Calibration Method by Harley

Harley's solution is based on space resection with the interior orientation parameters taken as unknowns (Harley, 1966). Image coordinate vector a′ and ground coordinate vector A′ represent the same direction (Figure 2.4) therefore the basic vector equation can be expressed by

$$\begin{bmatrix} X_I \\ Y_I \\ Z_I \end{bmatrix} - \begin{bmatrix} X_L \\ Y_L \\ Z_L \end{bmatrix} = \lambda_i \, \mathbf{R} \left[\begin{bmatrix} x_i \\ y_i \\ c \end{bmatrix} - \begin{bmatrix} x_L \\ y_L \\ c_0 \end{bmatrix} \right]. \qquad (2.45)$$

Here **R** is an orthogonal matrix and can be approximated by an identity matrix and a skew symmetric matrix, **S**, which finally leads to

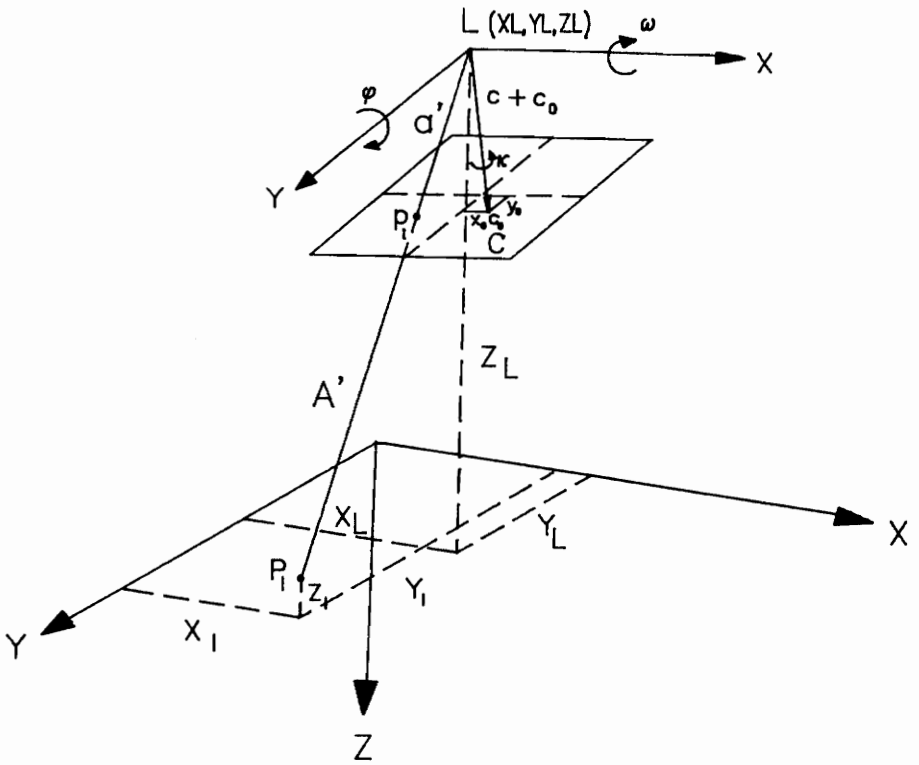

Figure 2.4 Coordinate Systems for Harley's Calibration Method (adapted from Faig, 1971).

$$\Phi_i = [\mathbf{I} + \mathbf{S}] \left[\begin{pmatrix} X_I \\ Y_I \\ Z_I \end{pmatrix} - \begin{pmatrix} X_L \\ Y_L \\ Z_L \end{pmatrix} \right]$$

$$- \lambda_i \, [\mathbf{I} - \mathbf{S}] \left[\begin{pmatrix} x_i \\ y_i \\ c \end{pmatrix} - \begin{pmatrix} x_L \\ y_L \\ c_0 \end{pmatrix} \right] = 0. \qquad (2.46)$$

The expression involves five points with 15 equations and 14 unknowns (ω, ϕ, κ, XL, YL, ZL, λ_1, λ_2, λ_3, λ_4, λ_5, x_0, y_0, c_0). More than five points are often used and a least squares adjustment is performed. A Taylor expansion is used to linearize the equations. The expression can be expanded to include symmetrical lens distortion by making c_0 a polynomial function where the new coefficients become new unknowns. This method is very similar to the one by Bhatti discussed earlier.

2.6 Jacobi's Method for Non-Metric Cameras

A method has been developed by O. Jacobi to calibrate non-metric cameras at the object (Faig, 1971). Figure 2.5 shows the position of the camera axis relative to the optical axis and how it can be described by the angles α and β. It is assumed that radial distortion is predetermined, thus the number of needed control points is decreased.

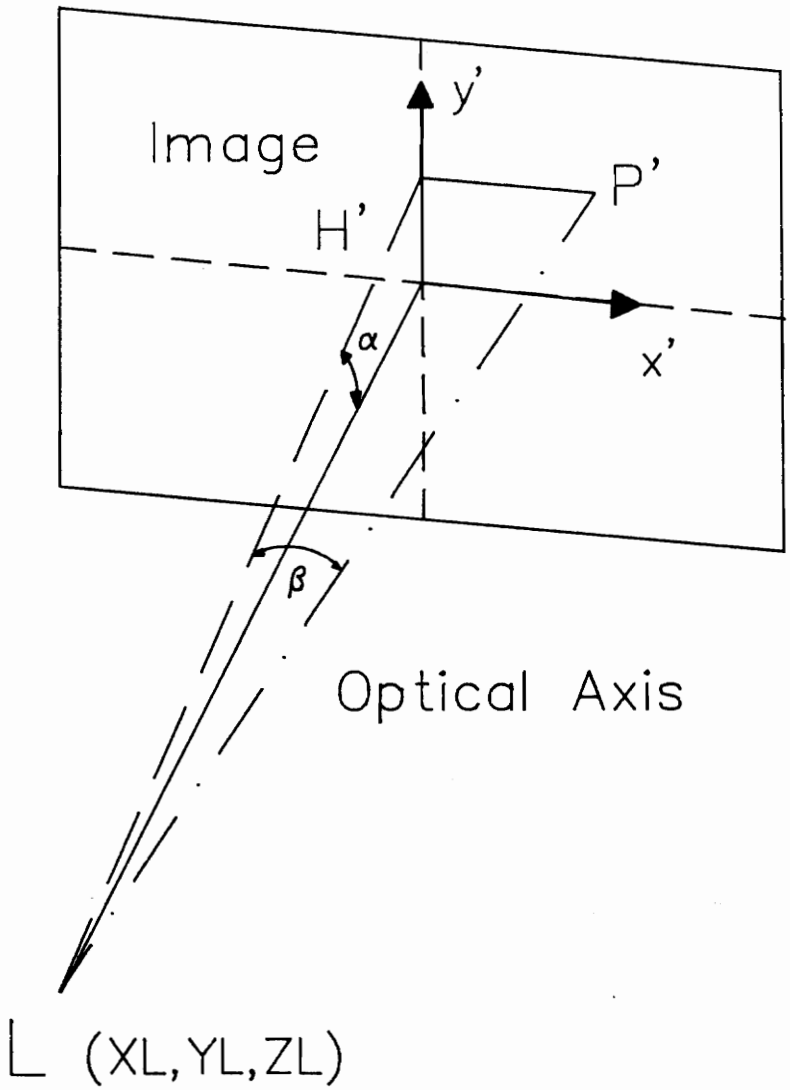

Figure 2.5 Definition of α and β (adapted from Faig, 1971).

The equation

$$\begin{bmatrix} XL'' \\ YL'' \\ ZL'' \end{bmatrix} = \mathbf{M}^{-1} \begin{bmatrix} X_i - XL' \\ Y_i - YL' \\ Z_i - ZL' \end{bmatrix} \tag{2.47}$$

shows the spatial transformation of the ground coordinates into the camera system with point L as the origin and the Z-axis as the optical axis. XL, YL, and ZL are the camera coordinates and **M** is the matrix made up of the rotational elements.

The image coordinates result from transforming the camera system into a plane perpendicular to the optical axis

$$\bar{x}' = \bar{p}\,\frac{XL''}{ZL''}\ ;\ \bar{y}' = \bar{p}\,\frac{YL''}{ZL''}. \tag{2.48}$$

In equation (2.48) $\bar{x}'$ and $\bar{y}'$ are the image coordinates and $\bar{p}$ is the principal distance. Expressions

$$dx' = \bar{x}'\ (a_3 r^2 + a_5 r^4 + a_7 r^6) \tag{2.49}$$

and

$$dy' = \bar{y}'\ (a_3 r^2 + a_5 r^4 + a_7 r^6) \tag{2.50}$$

show the compensation of the distortion with r as the radial distance from the point of symmetry and a_3, a_5, a_7 as distortion coefficients. Finally the transformation of the

corrected image coordinates into the fiducial system is shown by

$$x' = \bar{x}' \cos \alpha \qquad - \bar{p} \sin \alpha \tag{2.51}$$

$$y' = \bar{x}' \sin \beta \sin \alpha + \bar{y}' \cos \beta + \bar{p} \sin \beta \cos \alpha \tag{2.52}$$

$$p = \bar{x}' \cos \beta \sin \alpha - \bar{y}' \sin \beta + \bar{p} \cos \beta \cos \alpha. \tag{2.53}$$

Angles α and β replace the decentering distortion. The unknowns ω, ϕ, κ, XL, YL, ZL, x_0, y_0, f, α, and β are then determined by a least squares adjustment. This method is a variation of the previous methods that have been included thus far in the chapter.

2.7 Close-Range Camera Calibration

A practical method for calibrating radial and decentering distortion for close-range cameras was devised by Duane C. Brown (1971). The method utilizes a series of plumb lines whose images on photographic plates permit an analytical determination of lens distortion.

From Figure 2.6, the equation of a straight line can be expressed as

$$x' \sin \theta + y' \cos \theta = \rho. \tag{2.54}$$

Rho (ρ) is the distance of the line from the origin and θ is the angle between the y′ axis and the normal to the line. Due to radial and decentering distortion the image of the plumb line will not be straight. The corrected coordinates of the points on the imaged plumb line can be expressed by

$$x' = x + \bar{x}\,(K_1 r^2 + K_2 r^4 + K_3 r^6 + \cdots) + [P_1(r^2 + 2\bar{x}^2) + 2P_2\overline{xy}]\,[1 + P_3 r^2 + \cdots] \tag{2.55}$$

$$y' = y + \bar{y}\,(K_1 r^2 + K_2 r^4 + K_3 r^6 + \cdots) + [2P_1\overline{xy} + P_2(r^2 + 2\bar{y}^2)]\,[1 + P_3 r^2 + \cdots] \tag{2.56}$$

where the variables are defined as

$$\bar{x} = x - x_p \tag{2.57}$$

$$\bar{y} = y - y_p \tag{2.58}$$

$$r = [(x-x_p)^2 + (y - y_p)^2]^{\frac{1}{2}}. \tag{2.59}$$

The variables K_1, K_2, and K_3 are the coefficients of radial distortion and P_1, P_2, and P_3 are the coefficients of decentering distortion. When ${}_jx_i$ and ${}_jy_i$ are substituted into (2.55), (2.56), (2.57), and (2.58) and the resulting expressions are substituted into equation (2.54), an observation equation is formed which is a function of twelve parameters:

$$f({}_jx_i, {}_jy_i, x_p, y_p, K_1, K_2, K_3, P_1, P_2, P_3, \theta_i, \rho_i) = 0. \tag{2.60}$$

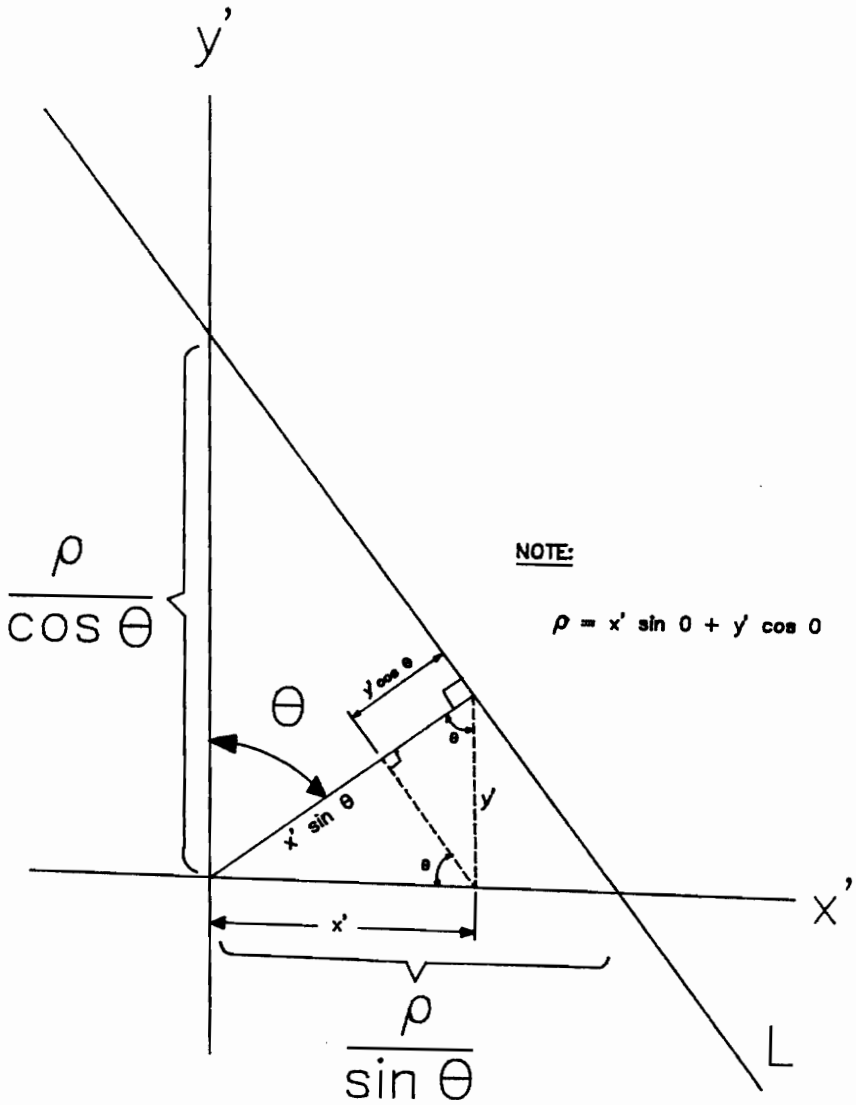

Figure 2.6 Explanation of the Plumb-Line Method (source Brown, 1971).

Using Brown's notation, i is defined as a line and j is defined as the measured point.

For m lines, a set of observation equations can be formed with a total of (8 + 2m) parameters. The (8 + 2m) represents the eight parameters of the inner cone (x_p, y_p, K_1, K_2, K_3, P_1, P_2, P_3) and a pair of parameters (θ_i, ρ_i) for each line (m). A least-squares adjustment can then be used if a sufficient number of points are measured for every imaged line.

Equations

$$ {}_jx_i = {}_jx_i^0 + v_{{}_jx_i} \tag{2.61} $$

$$ {}_jy_i = {}_jy_i^0 + v_{{}_jy_i} \tag{2.62} $$

and

$$ x_p = x_p^{00} + \delta x_p \tag{2.63} $$

$$ y_p = y_p^{00} + \delta y_p \tag{2.64} $$

$$ \vdots $$

$$ \rho_1 = \rho_i^{00} + \delta \rho_i \tag{2.65} $$

are used to define the measured coordinates, residuals, and parameters. Substituting (2.61) through (2.65) into (2.60) and linearizing by Taylor's expansion yields

$$\underset{(1,2)}{A_{ij}}\ \underset{(2,1)}{v_{ij}} + \underset{(1,8)}{\dot{B}_{ij}}\ \underset{(8,1)}{\dot{\delta}} + \underset{(1,2)}{\dot{\dot{B}}_{ij}}\ \underset{(2,1)}{\dot{\dot{\delta}}_i} = \underset{(1,1)}{\epsilon_{ij}} \tag{2.66}$$

$$i = 1, 2, \cdots, m$$
$$j = 1, 2, \cdots, n_i$$

in which

$$\epsilon_{ij} = - f({}_jx_i{}^0, {}_jy_i{}^0, x_p{}^{00}, y_p{}^{00}, K_1{}^{00}, \cdots, P_3{}^{00}, \theta_i{}^{00}, \rho_i{}^{00}) \tag{2.67}$$

and

$$v_{ij} = \begin{bmatrix} v_{jxi} \\ v_{jyi} \end{bmatrix}, \quad \dot{\delta} = \begin{bmatrix} \delta x_p \\ \delta y_p \\ \delta K_1 \\ \vdots \\ \delta P_3 \end{bmatrix}, \quad \dot{\dot{\delta}}_i = \begin{bmatrix} \delta\theta_i \\ \delta\rho_i \end{bmatrix} \tag{2.68}$$

are obtained. The coefficient matrices A_{ij}, $\dot{B}_{ij}$, and $\dot{\dot{B}}_{ij}$ are the Jacobians

$$\mathbf{A}_{ij} = - \frac{\partial \epsilon_{ij}}{\partial ({}_jx_i{}^0, {}_jy_i{}^0)} \tag{2.69}$$

$$\dot{\mathbf{B}}_{ij} = - \frac{\partial \epsilon_{ij}}{\partial (x_p{}^{00}, y_p{}^{00}, K_1{}^{00}, \cdots, P_3{}^{00})} \tag{2.70}$$

$$\dot{\dot{\mathbf{B}}}_{ij} = - \frac{\partial \epsilon_{ij}}{\partial (\theta_i, \rho_i)}. \tag{2.71}$$

The set of normal equations generated by the observations of the ith line are shown by

$$\begin{bmatrix} \underset{(8,8)}{\dot{N}_i} & \underset{(8,2)}{\bar{N}_i} \\ \underset{(2,8)}{\bar{N}_i{}^T} & \underset{(2,2)}{\dot{\dot{N}}_i} \end{bmatrix} \begin{bmatrix} \underset{(8,1)}{\dot{\delta}} \\ \underset{(2,1)}{\dot{\dot{\delta}}_i} \end{bmatrix} = \begin{bmatrix} \underset{(8,1)}{\dot{c}_i} \\ \underset{(2,1)}{\dot{\dot{c}}_i} \end{bmatrix}, \tag{2.72}$$

$$\begin{aligned} \dot{N}_i &= \sum \dot{N}_{ij}, & \dot{c}_i &= \sum \dot{c}_{ij}, \\ \bar{N}_i &= \sum \bar{N}_{ij}, & \ddot{c}_i &= \sum \ddot{c}_{ij}, \\ \ddot{N}_i &= \sum \ddot{N}_{ij}, \end{aligned} \tag{2.73}$$

where the summations range from $i=1$ to $i=n_i$,

$$\begin{aligned} \dot{N}_{ij} &= p_{ij}\dot{B}_{ij}{}^T\dot{B}_{ij}, & \dot{c}_{ij} &= p_{ij}\dot{B}_{ij}{}^T\epsilon_{ij}, \\ \bar{N}_{ij} &= p_{ij}\dot{B}_{ij}{}^T\ddot{B}_{ij}, & \ddot{c}_{ij} &= p_{ij}\ddot{B}_{ij}{}^T\epsilon_{ij}, \\ \ddot{N}_{ij} &= p_{ij}\ddot{B}_{ij}{}^T\ddot{B}_{ij}, \end{aligned} \tag{2.74}$$

and

$$\left[\begin{array}{c|cccc} \dot{N} + \dot{W} & \bar{N}_1 & \bar{N}_2 & \cdots & \bar{N}_m \\ \hline \bar{N}_1{}^T & \ddot{N}_1 & 0 & \cdots & 0 \\ \bar{N}_2{}^T & 0 & \ddot{N}_2 & \cdots & 0 \\ \vdots & \vdots & \vdots & & \vdots \\ \bar{N}_m{}^T & 0 & 0 & \cdots & \ddot{N}_m \end{array}\right] \left[\begin{array}{c} \dot{\delta} \\ \hline \ddot{\delta}_1 \\ \ddot{\delta}_2 \\ \vdots \\ \ddot{\delta}_n \end{array}\right]$$

$$= \left[\begin{array}{c} \dot{c} - \dot{W}\dot{\epsilon} \\ \hline \ddot{c}_1 \\ \ddot{c}_2 \\ \vdots \\ \ddot{c}_n \end{array}\right]. \tag{2.75}$$

The system of normal equations that results from simultaneously adjusting all observations from all lines is

$$\dot{N} = \sum_{i=1}^{m} \dot{N}_i, \quad \dot{c} = \sum_{i=1}^{m} \dot{c}_i. \tag{2.76}$$

The order of the normal equations is (8 + 2m) and increases linearly with the number of lines carried in the reduction. The $\dot{N}$ portion of the normal equations can be used to generate an algorithm for a solution to the system regardless of how large m may become.

The steps of the algorithm are given by

$$\underset{(2,8)}{Q_i} = \underset{(2,2)}{\dot{N}_i^{-1}} \; \underset{(2,8)}{\bar{N}_i^T} \tag{2.77}$$

$$\underset{(8,8)}{R_i} = \underset{(8,2)}{\bar{N}_i} \; \underset{(2,8)}{Q_i} \tag{2.78}$$

$$\underset{(8,8)}{S_i} = \underset{(8,8)}{\dot{N}_i} - \underset{(8,8)}{R_i} \tag{2.79}$$

$$\underset{(8,1)}{\bar{c}_i} = \underset{(8,1)}{\dot{c}_i} - \underset{(8,2)}{Q_i^T} \; \underset{(2,1)}{\dot{c}_i} \tag{2.80}$$

with the end result

$$S = S_1 + S_2 + \cdot \cdot \cdot + S_m \tag{2.81}$$

$$\bar{c} = \bar{c}_1 + \bar{c}_2 + \cdot \cdot \cdot + \bar{c}_m \; . \tag{2.82}$$

Equation

$$\dot{\delta} = (S + \dot{W})^{-1} \ (\bar{c} - \dot{W}\dot{\epsilon}) \tag{2.83}$$

shows the solution for the vector $\dot{\delta}$. The vector of parameters $\dot{\bar{\delta}}_i$ for each line is computed from

$$\dot{\bar{\delta}}_i = \dot{\bar{N}}_i^{-1}\dot{\bar{c}}_i + Q_i\dot{\delta}_i \quad (i = 1,2, \cdot \cdot \cdot ,m). \tag{2.84}$$

An eight by eight matrix is the largest that will be generated and operated upon in the above process. There is no limit to the number of lines that can be processed because the computational effort increases only linearly with the number of added lines. If the adjustment is iterated to convergence, the final residuals can be computed from

$$\underset{(2,1)}{v_{ij}} = \begin{bmatrix} v_j x_i \\ v_j y_i \end{bmatrix} = p_{ij} \underset{(2,2)}{A_{ij}} \underset{(2,1)}{A_{ij}^T} \underset{(1,1)}{\epsilon_{ij}} . \tag{2.85}$$

The equation

$$s = \left[\sum_{i=1}^{n} \sum_{j=1}^{n_i} v_{ij}^T A_{ij}^{-1} v_{ij} \ / \ \text{d.o.f.} \right]^{\frac{1}{2}} \tag{2.86}$$

gives the mean error of the residuals where the degrees of freedom (d.o.f.) are equal to (n - p - 2m).

2.8 Self-Calibration of a Fixed-Frame Multiple-Camera System

A multiple camera system was developed by C. S. Fraser and S. A. Veress to perform a self-calibrating bundle adjustment (1980). It was based on a pair of collinearity equations which are developed in Appendix A. This dynamic photogrammetric survey system was being used in the areas of biomedicine and bioengineering. Tests of the system enabled the recovery of the inner cone parameters of three Hasselblad cameras.

An experiment was conducted with three MK-70 metric Hasselblads with Biogon F/5.6 60 mm lenses attached to a fixed reference frame. The triangular shaped frame was constructed of steel tubes fitted into solid joints. The base measured two meters while the height was two and one-tenth meters high. Five camera stations permitted fixed-base stereo and convergent photography (Figure 2.7). The cameras had calibrated reseau plates with 25 crosses in a one cm by one cm grid pattern. The three cameras, numbered 1146, 1148, and 1149, were factory calibrated at infinity.

To recover the inner cone parameters a balanced geometric configuration between the camera system and the object target field was needed. This included one pair of

well spread swing angles and a highly convergent or significant depth spacing within the object target field.

The object space target field consisted of four piano wires weighted with heavy plumb bobs that were immersed in bath oil. Thirty-four spherical seed-beads, three mm in diameter, were attached to the wires and used as targets. Not all of the targets, however, appeared on all of the ten photographs. The target field with the camera positions, swing angles, and wire location can be seen in Figure 2.7. Camera 1146 was placed at stations 6, 7, and 9, camera 1148 was placed at station 8, and camera 1149 was placed at station 10.

To achieve an optimum recovery of the inner cone parameters a number of multiple-camera self-calibrating bundle adjustments were carried out. Various combinations of parameters were used. The best model was defined when the root mean square values of the image coordinate residuals and the statistical significance of the additional parameters were minimized. The following model was determined as the best with respect to the statistical significance and RMS values of the coordinate residuals:

$$\Delta x_c = xr^2K_{i_1} + xr^4K_{i_2} + (-x/c_i)dc_i + (3x^2 + y^2)P_{i_1} + 2xyP_{i_2} - x_{0i} \quad (2.87)$$

$$\Delta y_c = yr^2K_{i_1} + yr^4K_{i_2} + (-y/c_i)dc_i + 2xyP_{i_1} + (x^2 + 3y^2)P_{i_2} - y_{0i} \quad (2.88)$$

and

$$\Delta x_d = a_4 xy^2 \tag{2.89}$$

$$\Delta y_d = b_2 y + b_6 xy^2. \tag{2.90}$$

The variables Δx_c and Δy_c represent the camera correction terms, and Δx_d and Δy_d represent media correction terms. Corrections to the principal point offset are shown by x_{0i} and y_{0i}, correction to the focal length is given by dc_i, radial distortion is represented by the K_i's, and the P_i's are the coefficients of decentering distortion.

Statistical tests were made to see which of the additional parameters were significant. A stepwise non-linear regression found that the decentering polynomials were only significant in one of the cameras. Due to the high correlation between parameters K_{i1} and K_{i2} a multivariate linear hypothesis testing procedure was used to analyze the symmetric radial distortion curves. The hypothesis that lens distortion was zero was rejected, and tests for cameras numbered 1146 and 1148 showed that the polynomial distortion was not statistically significant at the five percent level. Only camera 1149 was deemed statistically significant at the five percent level. The most probable reasons for this failure were the large random errors due to the anomalous film deformation and insufficient degrees of freedom attributable to the small

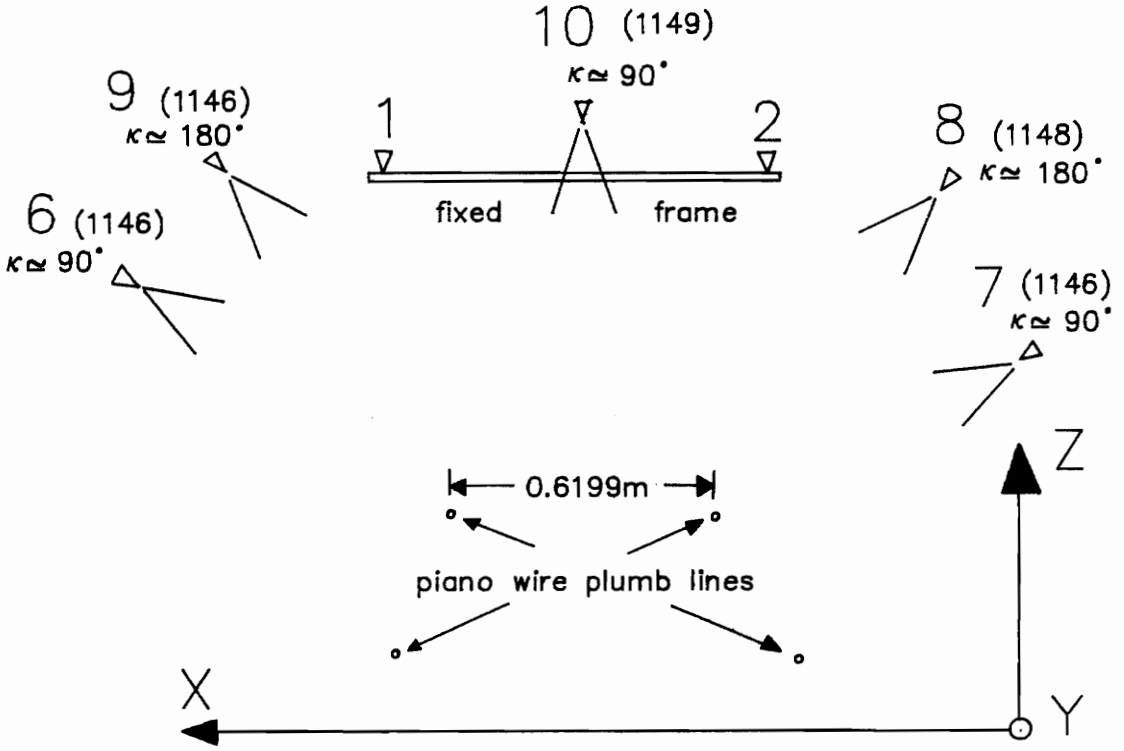

Figure 2.7 Auxiliary Camera Stations and the Object Target Array (source Fraser and Veress, 1980).

number of photos taken. A standard error of 2.8 μm was recovered by camera 1146 at a radius of 30 mm.

This technique illustrated that if unnecessary parameters were eliminated then an increase in the number of degrees of freedom was possible. The model also included a facility to allow camera-invariant, block-invariant, and image subset-invariant additional parameters. This calibration technique appeared to be practical for dual-camera and multiple-camera systems as well as for close-range photogrammetric systems.

2.9 Conclusions

The calibration methods listed in this paper are all relatively economical and do not require any unusual equipment. Test areas and test rigs used for the various experiments differ in shape and size yet each provides satisfactory results. Test objects are compact and may be disassembled when not in use.

Reliability and accuracy are achieved in each of the techniques discussed. Some methods require more computer storage than others, but the solutions are stable and converge after only a few iterations.

For the reasons given, it is difficult to say which technique is best. Evaluation of equipment, computer capacity, and available test sites must be considered before

a particular non-metric camera calibration method is chosen for an adjustment system.

The preceding review has been limited to techniques which utilize specific coordinate location information for control. Other methods do exist, however, which substitute for or augment location information with relative control or added constraints such as vanishing point information, straight line, and other geometric constructions. Various techniques that do not include control points, and where video and CCD imagery is utilized, were not considered in this chapter.

Emphasis was placed on self-calibration, where object photography and defined object points are used to calibrate a given camera, even though some of the methods included pre-calibration. Chapter 3 develops the self-calibration technique proposed by Fraser and Veress. The additional parameter model provides an adjustment for all the photographs taken from a single non-metric camera with unstable interior orientation. Multiple camera systems were not studied. This technique, although developed for non-metric camera applications, may be extended into the use of video and CCD cameras.

CHAPTER 3

SELF-CALIBRATION METHODOLOGY

3.1 Introduction

There have been many proposals for the number of additional parameters needed in a self-calibration procedure. The various parameters correct for the principal point offset, focal length, radial lens distortion, decentering distortion, and other errors due to the mechanical and chemical factors of the camera and photographic process. The polynomial forms that express these parameters also vary in length and structure.

3.1.1 The Fundamental Model

Regardless of the number of additional parameters chosen and the form of their expression, the correction is always made to the observed photographic coordinates

$$ {}_jx_i = {}_jx_i + \Delta x \tag{3.1} $$

$$ {}_jy_i = {}_jy_i + \Delta y \tag{3.2} $$

where ${}_jx_i$ and ${}_jy_i$ symbolize the image of point i on photograph j. The collinearity equations can then be seen as

$$ {}_jx_i + \Delta x = \tag{3.3} $$

$$ -f \left[\frac{m_{11}(X_i - {}_jXL) + m_{12}(Y_i - {}_jYL) + m_{13}(Z_i - {}_jZL)}{m_{31}(X_i - {}_jXL) + m_{32}(Y_i - {}_jYL) + m_{33}(Z_i - {}_jZL)} \right] $$

and

$$ {}_jy_i + \Delta y = \tag{3.4} $$

$$ -f \left[\frac{m_{21}(X_i - {}_jXL) + m_{22}(Y_i - {}_jYL) + m_{23}(Z_i - {}_jZL)}{m_{31}(X_i - {}_jXL) + m_{32}(Y_i - {}_jYL) + m_{33}(Z_i - {}_jZL)} \right]. $$

Expressions (3.3) and (3.4) are nonlinear and must be linearized in order to perform a least squares solution. To accomplish this, they are first rewritten as

$$ F_x = {}_jx_i + \Delta x + -f \frac{[\ \mathbf{r}\ ]}{[\ \mathbf{q}\ ]} = 0 \tag{3.5} $$

$$ F_y = {}_jy_i + \Delta y + -f \frac{[\ \mathbf{s}\ ]}{[\ \mathbf{q}\ ]} = 0 \tag{3.6} $$

or

$$ F_x = 0 = \mathbf{q}({}_jx_i + \Delta x) + \mathbf{r}f \tag{3.7} $$

$$ F_y = 0 = \mathbf{q}({}_jy_i + \Delta y) + \mathbf{s}f. \tag{3.8} $$

Taylor's theorem linearizes (3.7) and (3.8) in the form

$$0 = (F_x)_0 + \tag{3.9}$$

$$+ \left[\frac{\partial F_x}{\partial {}_jx_i}\right]_0 d{}_jx_i + \left[\frac{\partial F_x}{\partial \omega}\right]_0 d\omega + \left[\frac{\partial F_x}{\partial \phi}\right]_0 d\phi + \left[\frac{\partial F_x}{\partial \kappa}\right]_0 d\kappa$$

$$+ \left[\frac{\partial F_x}{\partial {}_jXL}\right]_0 d{}_jXL + \left[\frac{\partial F_x}{\partial {}_jYL}\right]_0 d{}_jYL + \left[\frac{\partial F_x}{\partial {}_jZL}\right]_0 d{}_jZL$$

$$+ \left[\frac{\partial F_x}{\partial X_i}\right]_0 dX_i + \left[\frac{\partial F_x}{\partial Y_i}\right]_0 dY_i + \left[\frac{\partial F_x}{\partial Z_i}\right]_0 dZ_i + \left[\frac{\partial F_x}{\partial \Delta x}\right]_0 d\Delta x$$

$$0 = (F_y)_0 + \tag{3.10}$$

$$+ \left[\frac{\partial F_y}{\partial {}_jY_i}\right]_0 d{}_jy_i + \left[\frac{\partial F_y}{\partial \omega}\right]_0 d\omega + \left[\frac{\partial F_y}{\partial \phi}\right]_0 d\phi + \left[\frac{\partial F_y}{\partial \kappa}\right]_0 d\kappa$$

$$+ \left[\frac{\partial F_y}{\partial {}_jXL}\right]_0 d{}_jXL + \left[\frac{\partial F_y}{\partial {}_jYL}\right]_0 d{}_jYL + \left[\frac{\partial F_y}{\partial {}_jZL}\right]_0 d{}_jZL$$

$$+ \left[\frac{\partial F_y}{\partial X_i}\right]_0 dX_i + \left[\frac{\partial F_y}{\partial Y_i}\right]_0 dY_i + \left[\frac{\partial F_y}{\partial Z_i}\right]_0 dZ_i + \left[\frac{\partial F_y}{\partial \Delta y}\right]_0 d\Delta y$$

where

$(F_x)_0$, $(F_y)_0$ = functions F_x, and F_y evaluated at the initial approximations for the unknowns $\omega, \phi, \kappa, {}_jXL, {}_jYL, {}_jZL$, $X_i, Y_i, Z_i, \Delta x$, and Δy

$(\partial F_x/\partial x_i)_0$, $(\partial F_x/\partial \omega)_0$, $(\partial F_x/\partial \phi)_0, \ldots, (\partial F_y/\partial \Delta y)_0$ = partial derivatives of the functions F_x and F_y evaluated at the initial approximations

$d_j x_i$, $d\omega$, $d\phi$, ..., $d\Delta y$ = unknown corrections to be applied to the initial approximations.

The additional parameter model chosen for this investigation was adapted from Fraser and Veress (1980) because it was highly compatible with the existing bundle adjustment software. The additional parameter (AP) terms could be used separately or together so that an investigation of each one's individual (or independent) behavior was possible. The correction model has the form

$$\Delta x = \Delta x_c + \Delta x_d \tag{3.11}$$

and

$$\Delta y = \Delta y_c + \Delta y_d \tag{3.12}$$

where

Δx_c, Δy_c = correction terms for the inner cone parameters

Δx_d, Δy_d = correction terms for the empirical image deformations.

The image correction terms of (3.11) and (3.12) are defined by the equations

$$\Delta x_c = -x_0 + (-x/f)df + x(K_1 r^2 + K_2 r^4 + K_3 r^6) + P_1(3x^2 + y^2) + 2P_2 xy \quad (3.13)$$

$$\Delta y_c = -y_0 + (-y/f)df + y(K_1 r^2 + K_2 r^4 + K_3 r^6) + 2P_1 xy + P_2(x^2 + 3y^2) \quad (3.14)$$

$$\Delta x_d = a_1 xy + a_2 y^2 + a_3 x^2 y + a_4 xy^2 \quad (3.15)$$

$$\Delta y_d = b_1 x + b_2 y + b_3 xy + b_4 x^2 + b_5 x^2 y + b_6 xy^2 \quad (3.16)$$

where

$x = {}_jx_i - x_0$

$y = {}_jy_i - x_0$

$r = (x^2 + y^2)^{\frac{1}{2}}$

${}_jx_i$, ${}_jy_i$ = observed image coordinates

x_0, y_0 = principal point coordinates

f = focal length (remains as a constant)

df = correction to the focal length (introduced as a variable correction parameter)

K_1, K_2, K_3 = coefficients of symmetric radial distortion

P_1, P_2 = coefficients of decentering distortion

$a_1, a_2, \ldots, b_6$ = coefficients of the polynomials which describe the distortion due to mechanical, physical, and chemical factors.

An expanded structure of the linearized collinearity condition equations may be shown as residual corrections to ${}_jx_i$ and ${}_jy_i$ by

$$v_{jx_i} = J + b_{11}d\omega + b_{12}d\phi + b_{13}d\kappa \tag{3.17}$$
$$- b_{14}d_jXL - b_{15}d_jYL - b_{16}d_jZL + b_{14}dX_i + b_{15}dY_i + b_{16}dZ_i$$
$$+ b_{17}dx_0 + b_{18}dy_0 + b_{19}d(df) + b_{110}dK_1 + b_{111}dK_2 + b_{112}dK_3$$
$$+ b_{113}dP_1 + b_{114}dP_2 + b_{115}da_1 + b_{116}da_2 + b_{117}da_3 + b_{118}da_4$$
$$+ b_{119}db_1 + b_{120}db_2 + b_{121}db_3 + b_{122}db_4 + b_{123}db_5 + b_{124}db_6$$

and

$$v_{jy_i} = K + b_{21}d\omega + b_{22}d\phi + b_{23}d\kappa \tag{3.18}$$
$$- b_{24}d_jXL - b_{25}d_jYL - b_{26}d_jZL + b_{24}dX_i + b_{25}dY_i + b_{26}dZ_i$$
$$+ b_{27}dx_0 + b_{28}dy_0 + b_{29}d(df) + b_{210}dK_1 + b_{211}dK_2 + b_{212}dK_3$$
$$+ b_{213}dP_1 + b_{214}dP_2 + b_{215}da_1 + b_{216}da_2 + b_{217}da_3 + b_{218}da_4$$
$$+ b_{219}db_1 + b_{220}db_2 + b_{221}db_3 + b_{222}db_4 + b_{223}db_5 + b_{224}db_6$$

where

$$J = \frac{(\mathbf{q}x + \mathbf{r}f)}{\mathbf{q}} \qquad K = \frac{(\mathbf{q}y + \mathbf{s}f)}{\mathbf{q}}$$

$$b_{11} = \frac{(jx_i+\Delta x)}{\mathbf{q}}(-m_{33}\Delta Y + m_{32}\Delta Z) + \frac{f}{\mathbf{q}}(-m_{13}\Delta Y + m_{12}\Delta Z)$$

$$b_{12} = \frac{(jx_i+\Delta x)}{\mathbf{q}}[\Delta X \cos\phi + \Delta Y(\sin\omega \sin\phi) + \Delta Z(-\sin\phi \cos\omega)]$$
$$+ \frac{f}{\mathbf{q}}[\Delta X(-\sin\phi \cos\kappa) + \Delta Y(\sin\omega \cos\phi \cos\kappa)$$
$$+ \Delta Z(-\cos\omega \cos\phi \cos\kappa)]$$

$$b_{13} = \frac{f}{\mathbf{q}}(m_{21}\Delta X + m_{22}\Delta Y + m_{23}\Delta Z)$$

$$b_{14} = \frac{(jx_i+\Delta x)}{\mathbf{q}}(m_{31}) + \frac{f}{\mathbf{q}}(m_{11})$$

$$b_{15} = \frac{(jx_i+\Delta x)}{\mathbf{q}}(m_{32}) + \frac{f}{\mathbf{q}}(m_{12})$$

$$b_{16} = \frac{(jy_j+\Delta y)}{q}(m_{33}) + \frac{f}{q}(m_{13})$$

$$b_{21} = \frac{(jy_j+\Delta y)}{q}(-m_{33}\Delta Y + m_{32}\Delta Z) + \frac{f}{q}(-m_{23}\Delta Y + m_{22}\Delta Z)$$

$$b_{22} = \frac{(jy_j+\Delta y)}{q}[\Delta X \cos\phi + \Delta Y(\sin\omega \sin\phi) + \Delta Z(-\cos\omega \sin\phi)]$$

$$+ \frac{f}{q}[\Delta X(\sin\phi \sin\kappa) + \Delta Y(-\sin\omega \cos\phi \sin\kappa)$$

$$+ \Delta Z(\cos\omega \cos\phi \sin\kappa)]$$

$$b_{23} = \frac{f}{q}(-m_{11}\Delta X - m_{12}\Delta Y - m_{13}\Delta Z)$$

$$b_{24} = \frac{(jy_j+\Delta y)}{q}(m_{31}) + \frac{f}{q}(m_{21})$$

$$b_{25} = \frac{(jy_j+\Delta y)}{q}(m_{32}) + \frac{f}{q}(m_{22})$$

$$b_{26} = \frac{(jy_j+\Delta y)}{q}(m_{33}) + \frac{f}{q}(m_{23})$$

$b_{17} = -1$	$b_{27} = 0$
$b_{18} = 0$	$b_{28} = -1$
$b_{19} = -x/f$	$b_{29} = -y/f$
$b_{110} = xr^2$	$b_{210} = yr^2$
$b_{111} = xr^4$	$b_{211} = yr^4$
$b_{112} = xr^6$	$b_{212} = yr^6$
$b_{113} = 3x^2 + y^2$	$b_{213} = 2xy$
$b_{114} = 2xy$	$b_{214} = x^2 + 3y^2$
$b_{115} = xy$	$b_{215} = 0$

$b_{116} = y^2$ $\qquad$ $b_{216} = 0$

$b_{117} = x^2y$ $\qquad$ $b_{217} = 0$

$b_{118} = xy^2$ $\qquad$ $b_{218} = 0$

$b_{119} = 0$ $\qquad$ $b_{219} = x$

$b_{120} = 0$ $\qquad$ $b_{220} = y$

$b_{121} = 0$ $\qquad$ $b_{221} = xy$

$b_{122} = 0$ $\qquad$ $b_{222} = x^2$

$b_{123} = 0$ $\qquad$ $b_{223} = x^2y$

$b_{124} = 0$ $\qquad$ $b_{224} = xy^2$

and where

$$x = {}_jx_i - x_0$$

$$y = {}_jy_i - y_0 .$$

3.1.2 Overparameterization

The number of additional parameters used in the correction polynomials is an important consideration. Errors may be forced into the bundle solution if too many parameters are used. Fraser (1982) warns that "in minimally constrained multistation phototriangulation adjustments, and in cases of three or less photos and/or few redundant control points, the use of higher degree APs can lead to a serious deterioration in accuracy and precision".

Originally proposed equations (3.13) through (3.16) were reduced to

$$\Delta x_c = -x_0 + (-x/f)df + xK_1r^2 + K_2r^4 + P_1(3x^2 + y^2) + 2P_2xy \tag{3.19}$$

$$\Delta y_c = -y_0 + (-y/f)df + yK_1r^2 + K_2r^4 + 2P_1xy + P_2(x^2 + 3y^2) \tag{3.20}$$

$$\Delta x_d = a_4xy^2 \tag{3.21}$$

$$\Delta y_d = b_2y + b_6xy^2 \tag{3.22}$$

by Fraser and Veress because it gave a more favorable self-calibration solution with respect to the statistical significance of the hypothesis tests and in minimizing the root mean square values of the image coordinate residuals (1980).

3.2 Normal Equations Using Absolute Orientation

There are twenty-seven unknown parameters to determine when the method of absolute orientation is invoked. These include the corrections to the six exterior orientation elements ($\omega,\phi,\kappa,{}_jXL,{}_jYL,{}_jZL$), the three object space coordinates (X_i,Y_i,Z_i), and the eighteen additional parameters ($x_0,y_0,df,K_1,K_2,K_3,P_1,P_2,a_1,a_2,a_3,a_4,b_1,b_2,b_3,b_4,b_5,b_6$). The total amount of unknowns depends on the number of photographs and the number of object points involved in the bundle solution.

A least squares adjustment begins by placing equations (3.5) and (3.6) into the general form

$$\mathbf{Av} + \mathbf{B}\Delta = \mathbf{F} \tag{3.23}$$

where, for one observed image point,

$$\mathbf{A} = \left[\frac{\partial \mathbf{F}}{\partial \mathrm{l}} \right] = \begin{bmatrix} 1 & 0 \\ 0 & 1 \end{bmatrix} = \mathbf{I} \quad \text{(The identity matrix)}$$

l = observations

$$\mathbf{v} = \begin{bmatrix} v_j x_i \\ v_j y_i \end{bmatrix}$$

$$\mathbf{B} = \left[\frac{\partial \mathbf{F}}{\partial \mathrm{par.}} \right]$$

$$= \left[\begin{matrix} b_{11} & b_{12} & b_{13} & (-b_{14}) & (-b_{15}) & (-b_{16}) & b_{14} & b_{15} & b_{16} \\ b_{21} & b_{22} & b_{23} & (-b_{24}) & (-b_{25}) & (-b_{26}) & b_{24} & b_{25} & b_{26} \end{matrix} \right.$$

$$\begin{matrix} b_{17} & b_{18} & b_{19} & b_{110} & b_{111} & b_{112} & b_{113} & b_{114} & b_{115} & b_{116} \\ b_{27} & b_{28} & b_{29} & b_{210} & b_{211} & b_{212} & b_{213} & b_{214} & b_{215} & b_{216} \end{matrix}$$

$$\left. \begin{matrix} b_{117} & b_{118} & b_{119} & b_{120} & b_{121} & b_{122} & b_{123} & b_{124} \\ b_{217} & b_{218} & b_{219} & b_{220} & b_{221} & b_{222} & b_{223} & b_{224} \end{matrix} \right]$$

par. = unknown parameters

$$\Delta = \left[\Delta \mathrm{par.} \right]$$

$$\Delta = [\ \Delta\omega_j\ \Delta\phi_j\ \Delta\kappa_j\ \Delta_j XL\ \Delta_j YL\ \Delta_j ZL\ \Delta X_i\ \Delta Y_i\ \Delta Z_i$$
$$\Delta x_0\ \Delta y_0\ \Delta df\ \Delta K_1\ \Delta K_2\ \Delta K_3\ \Delta P_1\ \Delta P_2\ \Delta a_1\ \Delta a_2$$
$$\Delta a_3\ \Delta a_4\ \Delta b_1\ \Delta b_2\ \Delta b_3\ \Delta b_4\ \Delta b_5\ \Delta b_6\ ]^T$$

$$\mathbf{F} = \begin{bmatrix} F_X \\ F_Y \end{bmatrix} = \begin{bmatrix} -J \\ -K \end{bmatrix}.$$

The condition equation is then partitioned to read

$$\mathbf{V} + [\ \dot{\mathbf{B}}\ \ \blacksquare\mathbf{B}\ \ \blacklozenge\mathbf{B}\ ] \begin{bmatrix} \dot{\Delta} \\ \blacksquare\Delta \\ \blacklozenge\Delta \end{bmatrix} = \mathbf{F} \tag{3.24}$$

or

$$\underset{(2,1)}{\mathbf{V}} + \underset{(2,6)}{\dot{\mathbf{B}}}\ \underset{(6,1)}{\dot{\Delta}} + \underset{(2,3)}{\blacksquare\mathbf{B}}\ \underset{(3,1)}{\blacksquare\Delta} + \underset{(2,18)}{\blacklozenge\mathbf{B}}\ \underset{(18,1)}{\blacklozenge\Delta} = \underset{(2,1)}{\mathbf{F}} \tag{3.25}$$

where

$$\dot{\mathbf{B}} = \begin{bmatrix} b_{11} & b_{12} & b_{13} & (-b_{14}) & (-b_{15}) & (-b_{16}) \\ b_{21} & b_{22} & b_{23} & (-b_{24}) & (-b_{25}) & (-b_{26}) \end{bmatrix}$$

$$\blacksquare\mathbf{B} = \begin{bmatrix} b_{14} & b_{15} & b_{16} \\ b_{24} & b_{25} & b_{26} \end{bmatrix}$$

$$\blacklozenge\mathbf{B} = \begin{bmatrix} b_{17} & b_{18} & b_{19} & b_{110} & b_{111} & b_{112} & b_{113} & b_{114} & b_{115} & b_{116} \\ b_{27} & b_{28} & b_{29} & b_{210} & b_{211} & b_{212} & b_{213} & b_{214} & b_{215} & b_{216} \end{bmatrix}$$
$$\begin{matrix} b_{117} & b_{118} & b_{119} & b_{120} & b_{121} & b_{122} & b_{123} & b_{124} \\ b_{217} & b_{218} & b_{219} & b_{220} & b_{221} & b_{222} & b_{223} & b_{224} \end{matrix}\ \Bigg]$$

$$\dot{\Delta} = \left[\Delta\omega_j \quad \Delta\phi_j \quad \Delta\kappa_j \quad \Delta_j XL \quad \Delta_j YL \quad \Delta_j ZL \right]^T$$

$$\blacksquare\ \Delta = \left[\Delta X_i \quad \Delta Y_i \quad \Delta Z_i \right]^T$$

$$\blacklozenge\ \Delta = \left[\Delta x_0 \ \Delta y_0 \ \Delta df \ \Delta K_1 \ \Delta K_2 \ \Delta K_3 \ \Delta P_1 \ \Delta P_2 \ \Delta a_1 \ \Delta a_2 \right.$$
$$\left. \Delta a_3 \ \Delta a_4 \ \Delta b_1 \ \Delta b_2 \ \Delta b_3 \ \Delta b_4 \ \Delta b_5 \ \Delta b_6 \right]^T.$$

The least squares solution to the above model is obtained when the weighted sum of the squares of the residuals are minimized. Equation (3.24) can be rewritten to solve for $\mathbf{v}$, $\mathbf{v} = \mathbf{F} - \mathbf{B}\Delta$, and thus the scalar to be minimized is defined by

$$\Phi = \mathbf{v}^T \mathbf{W}\ \mathbf{v}. \tag{3.26}$$

This can be rewritten as

$$\Phi = (\ \mathbf{F} - \mathbf{B}\Delta\ )^T\ \mathbf{W}\ (\ \mathbf{F} - \mathbf{B}\Delta\ ) \tag{3.27}$$

$$\Phi = (\ \mathbf{F}^T - \Delta^T\mathbf{B}^T)\ (\ \mathbf{WF} - \mathbf{WB}\Delta\ ) \tag{3.28}$$

$$\Phi = (\ \Delta^T\mathbf{B}^T\mathbf{WB}\Delta - \Delta^T\mathbf{B}^T\mathbf{WF} + \mathbf{F}^T\mathbf{WF} - \mathbf{F}^T\mathbf{WB}\Delta\ ) \tag{3.29}$$

$$\Phi = (\ \Delta^T\mathbf{B}^T\mathbf{WB}\Delta - 2\mathbf{F}^T\mathbf{WB}\Delta + \mathbf{F}^T\mathbf{WF}\ ). \tag{3.30}$$

The vector of parameters Δ is the free variable in equation (3.30). When the first partial derivative of Φ with respect to Δ is zero, then Φ is a minimum. This is shown by

$$\frac{\partial \Phi}{\partial \Delta} = \mathbf{0} = 2\Delta^T \mathbf{B}^T \mathbf{W} \mathbf{B} - 2\mathbf{F}^T \mathbf{W} \mathbf{B} \tag{3.31}$$

which results in the normal equation

$$(\mathbf{B}^T \ \mathbf{W} \ \mathbf{B}) \ \Delta = \mathbf{B}^T \ \mathbf{W} \ \mathbf{F}. \tag{3.32}$$

When partitioned, the normal equation (3.32) looks like

$$\begin{bmatrix} \dot{\mathbf{B}}^T \ \mathbf{W} \ \dot{\mathbf{B}} & \dot{\mathbf{B}}^T \ \mathbf{W} \ \ddot{\mathbf{B}} & \dot{\mathbf{B}}^T \ \mathbf{W} \ \dot{\dot{\mathbf{B}}} \\ \ddot{\mathbf{B}}^T \ \mathbf{W} \ \dot{\mathbf{B}} & \ddot{\mathbf{B}}^T \ \mathbf{W} \ \ddot{\mathbf{B}} & \ddot{\mathbf{B}}^T \ \mathbf{W} \ \dot{\dot{\mathbf{B}}} \\ \dot{\dot{\mathbf{B}}}^T \ \mathbf{W} \ \dot{\mathbf{B}} & \dot{\dot{\mathbf{B}}}^T \ \mathbf{W} \ \ddot{\mathbf{B}} & \dot{\dot{\mathbf{B}}}^T \ \mathbf{W} \ \dot{\dot{\mathbf{B}}} \end{bmatrix} \begin{bmatrix} \dot{\Delta} \\ \ddot{\Delta} \\ \dot{\dot{\Delta}} \end{bmatrix} = \begin{bmatrix} \dot{\mathbf{B}}^T \ \mathbf{W} \ \mathbf{F} \\ \ddot{\mathbf{B}}^T \ \mathbf{W} \ \mathbf{F} \\ \dot{\dot{\mathbf{B}}}^T \ \mathbf{W} \ \mathbf{F} \end{bmatrix} \tag{3.33}$$

or

$$\begin{bmatrix} \mathbf{N}_{11} & \mathbf{N}_{12} & \mathbf{N}_{13} \\ \mathbf{N}_{21} & \mathbf{N}_{22} & \mathbf{N}_{23} \\ \mathbf{N}_{31} & \mathbf{N}_{32} & \mathbf{N}_{33} \end{bmatrix} \begin{bmatrix} \dot{\Delta} \\ \ddot{\Delta} \\ \dot{\dot{\Delta}} \end{bmatrix} = \begin{bmatrix} \mathbf{T}_1 \\ \mathbf{T}_2 \\ \mathbf{T}_3 \end{bmatrix}. \tag{3.34}$$

In the least squares solution, all exterior parameters (ω, ϕ, κ, XL, YL, ZL), ground coordinates (X, Y, Z), and additional parameters (x_0, y_0, df, $K_1, K_2, K_3, P_1, P_2, a_1, a_2, a_3, a_4, b_1, b_2, b_3, b_4, b_5, b_6$) are considered to be unknown. A priori knowledge of these elements may be utilized by applying the appropriate weights in additional condition equations. Care should be taken in determining the corresponding weight matrices because the values of the various parameters are measured in different units (e.g. mm, radians, feet).

The formulas that relate observed values to the adjusted values are

$$v_P + P = \hat{P} \tag{3.35}$$

$$v_X + X = \hat{X} \tag{3.36}$$

$$v_A + A = \hat{A} \tag{3.37}$$

where

P, X, A = a priori observed/estimated parameter values

$\hat{P}, \hat{X}, \hat{A}$ = adjusted parameter values

v_P, v_X, v_A = residuals corresponding to the adjusted parameters.

Linearizing these equations creates

$$v_P + P = P^\circ + \dot{\Delta} \tag{3.38}$$

$$v_X + X = X^\circ + \blacksquare\!\!\!\Delta \tag{3.39}$$

$$v_A + A = A^\circ + \blacklozenge\!\!\!\Delta \tag{3.40}$$

where

$P^\circ, X^\circ, A^\circ$ = corrected values for the parameters

$\dot{\Delta}, \blacksquare\!\!\!\Delta, \blacklozenge\!\!\!\Delta$ = correction vectors.

The discrepancies between the a priori observed values and the corrected values are then defined as

$$\epsilon_P = (P^\circ - P) = v_P - \dot{\Delta} \tag{3.41}$$

$$\epsilon_X = (X^\circ - X) = v_X - \blacksquare\!\!\!\Delta \tag{3.42}$$

$$\epsilon_A = (A^\circ - A) = v_A - \overset{\blacklozenge}{\Delta} \tag{3.43}$$

where

ϵ_P = the discrepancy associated with the exterior orientation parameters

ϵ_X = the discrepancy associated with the ground coordinates

ϵ_A = the discrepancy associated with the additional parameters.

Following the method of normal equation reductions by Moffitt and Mikhail (1980) and incorporating the added parameter matrices the linearized normal equations become

$$\begin{bmatrix} \mathbf{N}_{11} + \mathbf{W}_P & \mathbf{N}_{12} & \mathbf{N}_{13} \\ \mathbf{N}_{21} & \mathbf{N}_{22} + \mathbf{W}_X & \mathbf{N}_{23} \\ \mathbf{N}_{31} & \mathbf{N}_{32} & \mathbf{N}_{33} + \mathbf{W}_A \end{bmatrix} \begin{bmatrix} \dot{\Delta} \\ \overset{\blacksquare}{\Delta} \\ \overset{\blacklozenge}{\Delta} \end{bmatrix} = \begin{bmatrix} \mathbf{T}_1 + \mathbf{W}_P \epsilon_P \\ \mathbf{T}_2 + \mathbf{W}_X \epsilon_X \\ \mathbf{T}_3 + \mathbf{W}_A \epsilon_A \end{bmatrix} \tag{3.44}$$

where

ϵ_P, ϵ_X, ϵ_A = zero on the first iteration then updated by $\dot{\Delta}$, $\overset{\blacksquare}{\Delta}$, and $\overset{\blacklozenge}{\Delta}$

$\mathbf{W}_P$, $\mathbf{W}_X$, $\mathbf{W}_A$ = 6x6, 3x3, and 18x18 weight matrices which are formulated to account for the difference in units.

Figure 3.1 shows an example of a normal matrix, **N**, after it has been filled with values. In the example, there are five photographs and eight target points. All eight points are imaged on all five photographs. The rows and columns corresponding to the additional parameters (AP's) display the contributions made by the self-calibration parameters to the normal matrix. To determine the corrections to the parameters, Δ, the normal equation matrix, **N**, is inverted and then multiplied by the residual matrix, **T**.

To solve the normal equations with the least squares method, the number of condition equations must be greater than the number of unknowns,

$$c > u \tag{3.45}$$

or

$$2n > 6p + 3t + a \tag{3.46}$$

where

c = the number of condition equations (2n)

u = the number of unknowns (6p + 3t + a)

n = the total number of image points on all photographs

p = the number of photographs

t = the number of target (ground) points

a = the number of additional parameters.

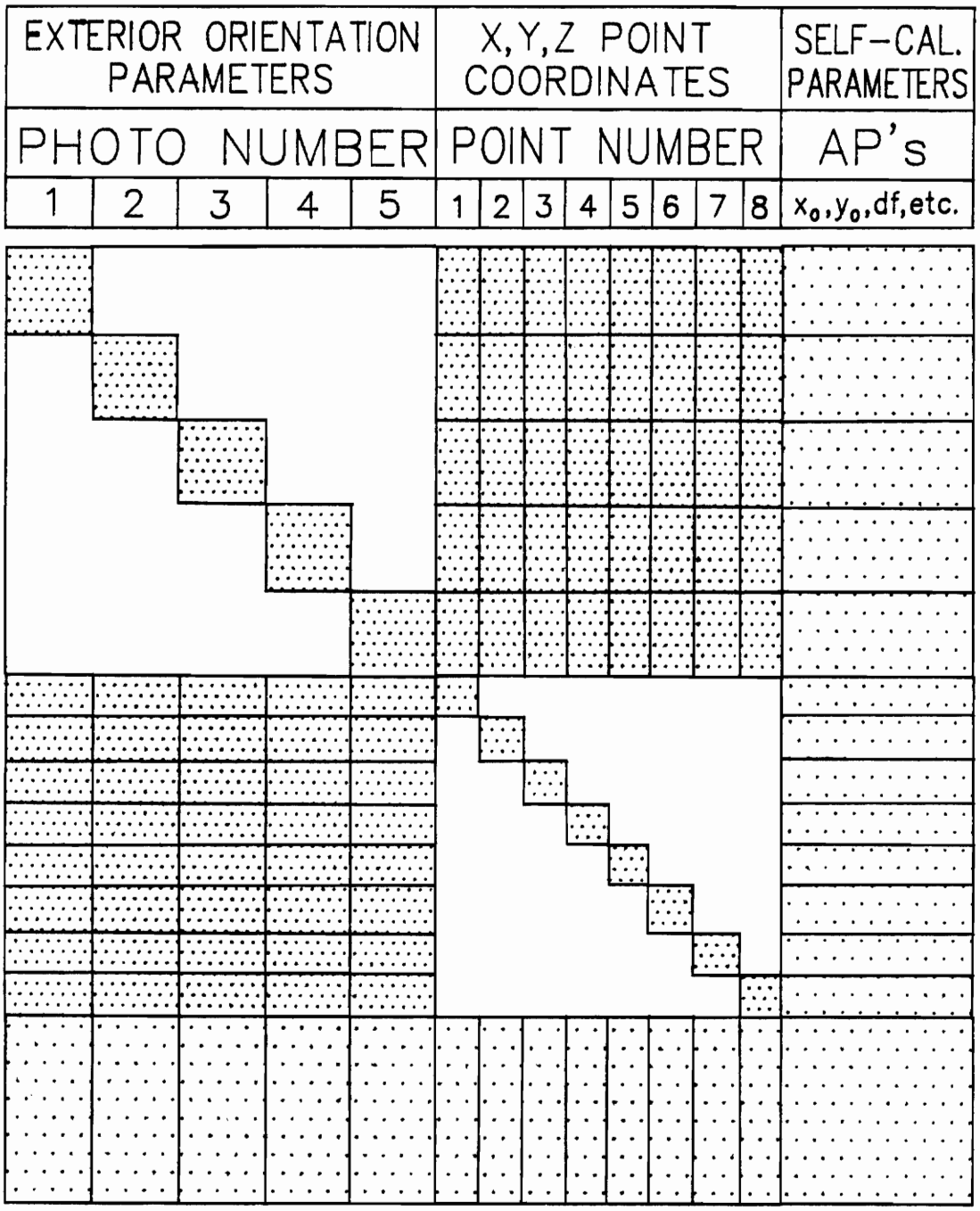

Figure 3.1 Normal Equation Structure for Self-Calibration.

In the case where all target points are imaged on every photograph involved in the bundle solution, the number of condition equations, c, is equal to 2pt.

3.3 The Bundle Adjustment Program

An existing bundle adjustment system for aerotriangulation was modified and employed for this research. A section in the middle of the Bundle program was first rewritten to accommodate the self-calibration formulas. To accomplish this, the subroutines that created reduced normal equations were replaced with nested do loops that specifically filled each submatrix of the normal equation matrices. Weights were then added to the submatrices and corrections were made to the orientation elements, ground point coordinates, and additional parameters. A solution to the corrections to the parameters matrix, **X**, was achieved after the normal equation matrix, **N**, was inverted and $\mathbf{N}^{-1}$ was multiplied by **T**, the residual matrix. In this manner a revised version of the Bundle Adjustment program was produced.

Modification was made to the Collin subroutine and the updated version was named Collinap because it incorporated the use of additional parameters to evaluate the coefficients of each term of the linearized collinearity equations. Collinap was dimensioned for eighteen additional

parameters with the ability to use any combination of the eighteen. Although the self-calibration model may have been expanded to accommodate multiple camera systems, this math model and computer software was developed for only a single camera system.

The bundle adjustment programs were available on a Micro VAX computer located on the main campus of Virginia Polytechnic Institute and State University in Blacksburg, Virginia. The self-calibration version was dimensioned for ten photographs and 600 ground points which was adequate to test the accuracy of the program. A source code listing of the Bundle and Collinap routines has been included in Appendix B.

3.4 Test Data

In order to verify the accuracy of the programming, the output from the revised bundle adjustment program was compared to that of the old bundle adjustment program in the absence of additional parameters. International Society of Photogrammetry (ISP) data were used in the first comparisons. These data were generated from an electronic computer program and provided a basic set of aerotriangulation data comprised of 180 different photographs. A selection of ISP photographs was run through

both bundle adjustment versions, and after some debugging the outputs from each were identical.

A second set of fictitious data was generated from a program written in Quattro. Quattro is a spread sheet computer package developed by Borland International. A program that evaluated the collinearity equations was written with Quattro and permitted the operator to fill in the focal length (f), the exterior orientation elements (ω,ϕ,κ,XL,YL,ZL), and values for the ground (target) points. Image point coordinates were then computed and displayed next to the target point names. The use of this program allowed an endless variety of test data to be generated with relative ease. These data were particularly useful in replicating the data for the configuration of the Nikon data sets.

A third set of data consisted of actual imagery collected from a 35 mm Nikon FM2 camera and a zoom lens set at a focal length of approximately 50 mm. Twenty-three photographs of a small target field were made from various heights and orientation angles. A Mann comparator was then used to measure a negative and the corners of the image frame were used as fiducials. The negatives were enlarged onto eight inch by ten inch photographic paper and then measured with a Hitachi Hicomscan HDG Series 15x15 Digitizer. The digitized stage-to-comparator points were

organized into the proper format by a program which was named Digsetup and then used in the bundle adjustment software. The input to the program was rounded to three decimal places and only the additional parameter corrections x_0, y_0, and df were computed in the bundle adjustment.

3.4.1 Quattro-Created Test Data

A set of test data was created with the Quattro software that consisted of four photographs and eight control points. Figure 3.2 illustrates the orientation of the exposure stations with respect to the target area. Table 3.1 lists the coordinates of the control points and Table 3.2 tabulates the orientation elements of the four exposure stations. A focal length of 50 mm, principal point offset of x_0 = 0 mm, y_0 = 0 mm, and equivalent Nikon camera frame fiducials were used to evaluate the collinearity condition equations.

The Quattro data were generated as a prototype for the Nikon data and were processed through the self-calibration bundle adjustment. A camera to object distance was used to define scale. A number of different resection and self-calibration runs were made with variations in the unit weights, number of additional parameters, and quantity of photographs. These runs were evaluated for the corrections made to the focal length and principal point offset,

standard deviation of unit weight for the adjustment ($\sigma_0{}^2$), degrees of freedom (d.o.f.), and root mean square (RMS) values in the X, Y, and Z control coordinate discrepancies (Table 3.3). The weights established for the measurement errors in the Quattro runs are listed in Table 3.4.

In the control runs, where focal length and principal point offset were held constant, there was little difference between the cases where three photographs were used and where four were used. When self-calibration was added, there was a shift in the distribution of corrections from the RMS values of the image coordinate residual to the self-calibration parameters. The Quattro data were generated as unweighted or perfect data. They were then weighted and placed into the bundle solution. The resulting small corrections to the focal length of 0.009 mm and 0.013 mm, shown in Table 3.3, may be due to possible noise in the solution created by round off errors in image measurements or incongruous weighting of the additional parameters and orientation elements.

In the second set of runs the first approximation to the focal length and principal point offset were changed to see if the self-calibration parameters could recover the original values. The bundle adjustment was successful in determining a correction to the focal length (df) of -0.999 mm and a correction to the principal point offset of x_0 =

-0.997 mm and y_0 = -0.994 mm. When no self-calibration was used, the corrections for the discrepancies resulted in inflated residuals on the image measurements and object target point coordinates and were evidenced by the $\sigma_0{}^2$ and RMS values. The additional parameters, other than df, x_0, and y_0, were not used at that time until further experiments with the self-calibration bundle solution were conducted and more was learned about the additional parameter behavior within the solution.

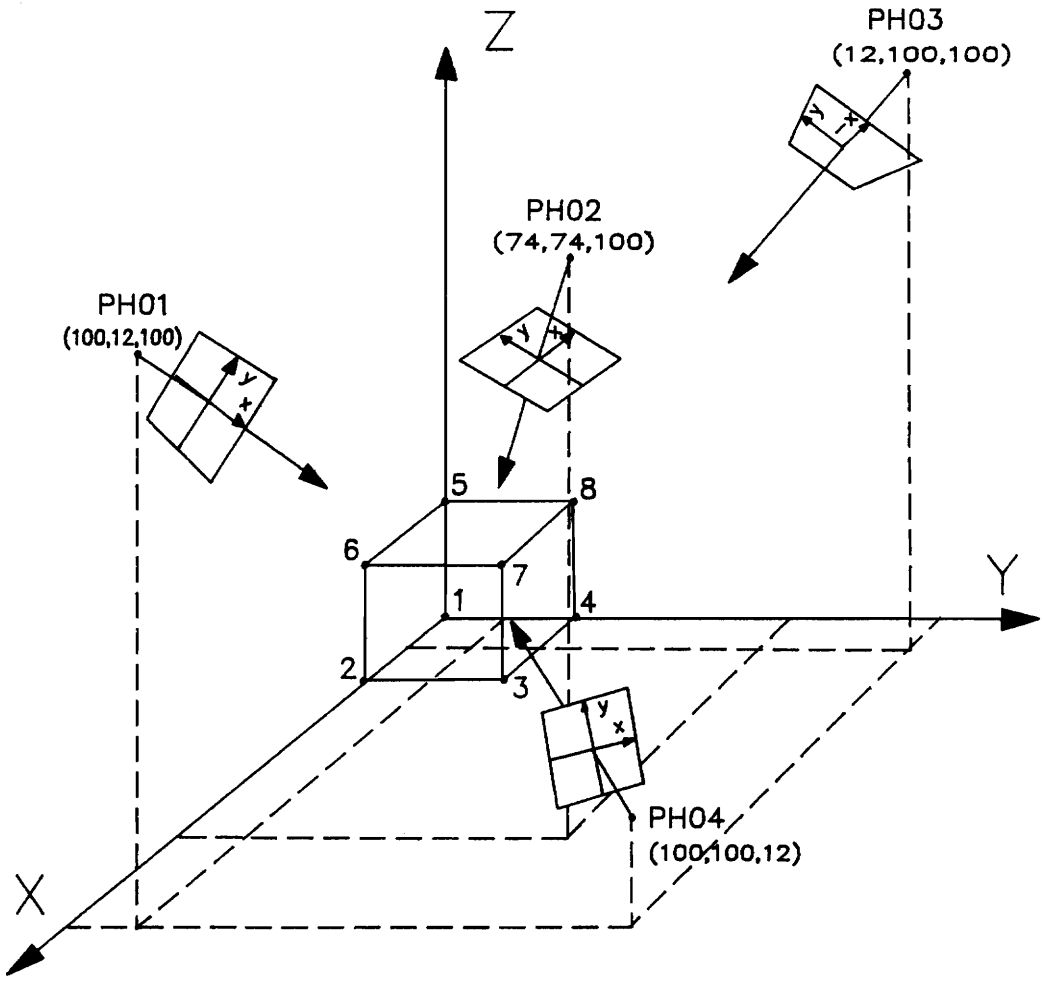

NOTE: Units of measurement are in inches.

Figure 3.2 Quattro Camera Locations.

Table 3.1 Quattro Control Points.

Point #	X (in)	Y (in)	Z (in)
1	0	0	0
2	24	0	0
3	24	24	0
4	0	24	0
5	0	0	24
6	24	0	24
7	24	24	24
8	0	24	24

Table 3.2 Quattro Exposure Stations.

Photo #	ω	ϕ	κ	XL (in)	YL (in)	ZL (in)
1	0°	45°	90°	100	12	100
2	134°	155°	-46°	74	74	100
3	135°	180°	0°	12	100	100
4	90°	135°	0°	100	100	12

Table 3.3 Results of Quattro Experimental Data.

(Initial approximations: f = 50mm, x_0 = 0mm, y_0 = 0mm)

Self Cal. Y/N	# Phts	Corrections (mm)			σ_0^2 (mm)	d. o. f.	RMS (in)		
		df	x_0	y_0			X	Y	Z
N	3	-	-	-	.00016	48	.0004	.0004	.0002
N	4	-	-	-	.00016	64	.0004	.0004	.0003
Y	3	.009	.0004	-.0004	.00016	48	.0003	.0003	.0002
Y	4	.013	.0004	.0011	.00015	64	.0003	.0003	.0003

(Initial approximations: f = 51mm, x_0 = 1mm, y_0 = 1mm)

Self Cal. Y/N	# Phts	Corrections (mm)			σ_0^2 (mm)	d. o. f.	RMS (in)		
		df	x_0	y_0			X	Y	Z
N	3	-	-	-	.00823	48	.0283	.0277	.0168
N	4	-	-	-	.00792	64	.0287	.0285	.0200
Y	3	-.999	-.997	-.995	.00017	48	.0003	.0003	.0002
Y	4	-.999	-.997	-.994	.00016	64	.0003	.0003	.0002

Table 3.4 Weights Established for Quattro Data.

Item	Weight (standard deviation)
Image Measurement	$\sigma = \pm$ 0.003 mm
Control Points	$\sigma = \pm$ 0.010 in
External Orientaion:	
ω, ϕ, κ	$\sigma = \pm$ 0.349 rad (20°)
XL, YL, ZL	$\sigma = \pm$ 20.000 in
Additional Parameters:	
df	$\sigma = \pm$ 1.000 mm
x_0, y_0	$\sigma = \pm$ 1.000 mm

3.4.2 Nikon FM2 Test Data

A test bed was constructed from two-foot by two-foot square sheets of hardboard. The pieces were fastened together to form a corner that created an XYZ axis system. The boards were painted white, X, Y, and Z axes were positioned and labeled, and a two inch grid pattern was attached on all three planes. An assortment of targets was fabricated and placed throughout the target area (see Photograph 3.1). As can be seen in the photograph, the boards in the X-Z and Y-Z planes are not perfectly flat; a condition that occurred when paint was applied to the material. The smaller target planes, however, may be considered flat for all practical adjustment purposes.

The size of the individual target points was an issue of concern. A nominal format for 35 mm film is 24 mm by 36 mm. The maximum available viewing dimension for the two foot target cube was about three and a half feet (1067 mm). When a distinctive point of 0.1 mm (100 μm) is desired on the negative so that it may be viewed with a comparator, then scale and distance must be considered. From Figure 3.3 it can be seen that

$$S = \frac{f}{H} = \frac{d}{D} \tag{3.47}$$

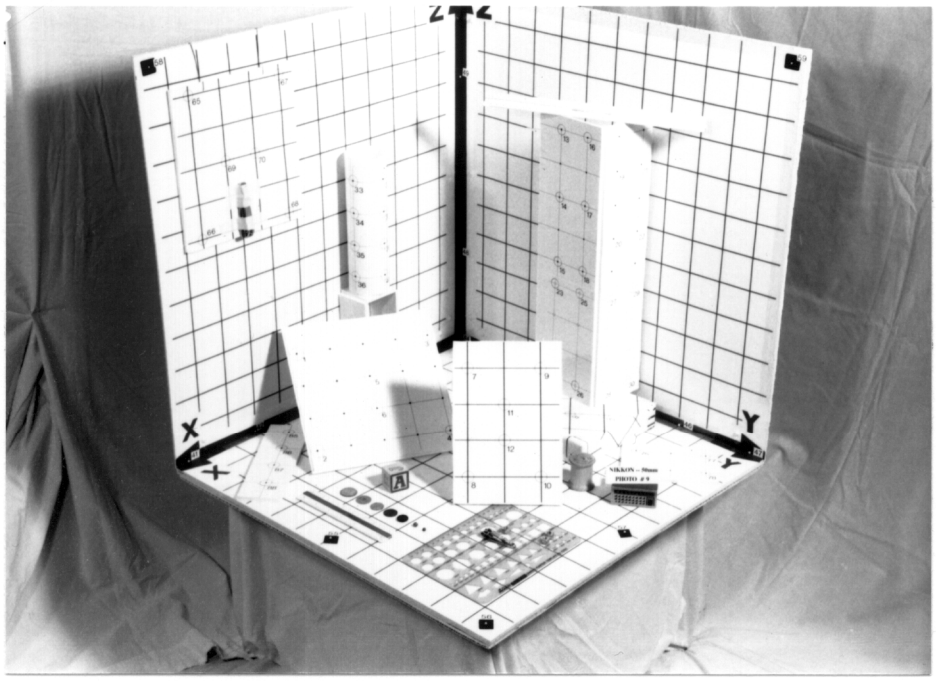

Photograph 3.1 Target Area.

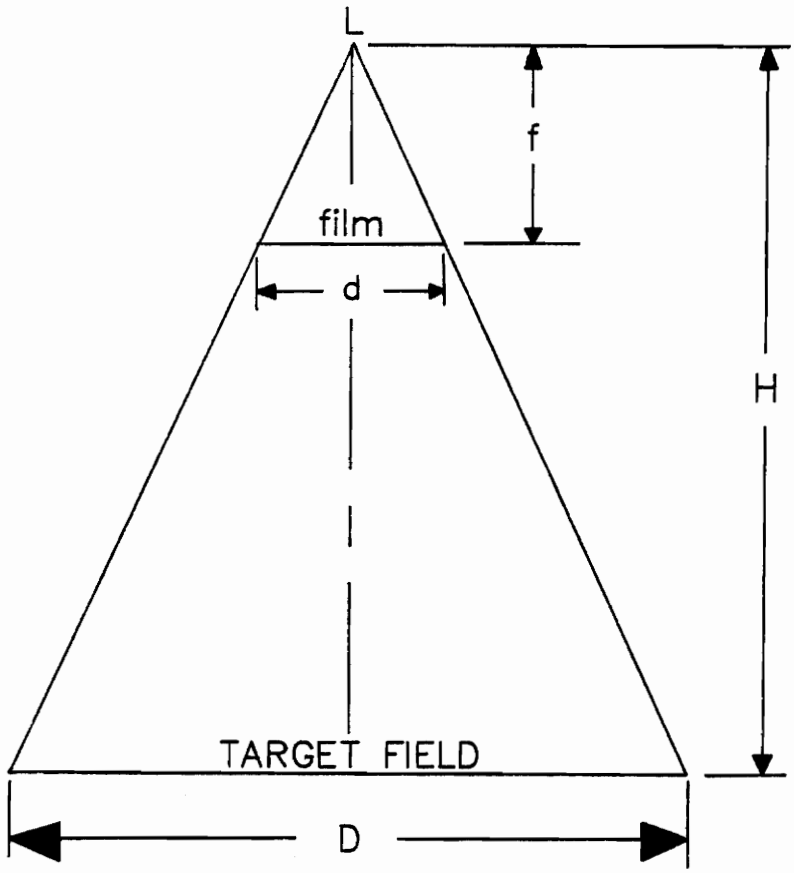

$$S = \frac{f}{H} = \frac{d}{D}$$

Figure 3.3 Determination of Photographic Scale.

where

S = scale of the photograph

f = focal length

H = distance from the exposure station to the target field

d = effective film width

D = maximum viewing dimension of the target field.

For the given target and film size, the scale was 24mm/1067mm or 1:44. The target point was at least (0.1mm)(44) = 4.4 mm in diameter to produce a 0.1 mm image on the negative, and the camera was to be positioned 7.3 feet away from the center of the target. When the negative was enlarged and printed on eight-inch by ten-inch paper, the image was increased 6.6 times, thus the target point needed to be only 0.7 mm in diameter to meet the same requirement. Target point sizes were selected to comply with the above criteria.

Foamcore and plastic triangles were assembled to provide base structures on which to mount two-inch grid paper that contained circled target points. The drafting triangles allowed the targets to lie on 30, 45, and 90 degree planes. A template, cylinder, coins, scales, and other items were placed within the test bed to be used as

potential targets. Pins with plastic spherical heads about a tenth of an inch in diameter were pushed into the corners of the hardboard to allow sufficient depth and area control of the target field.

Twenty-three independent initial camera orientations were estimated with the coordinate system as shown in Figure 3.4. Camera position was measured with the aid of kite string secured at datum which was set parallel to the X and Y axes. A carpenter's tape measure was used to take measurements from the X axis and Y axis to the camera's location projected down onto the datum, and then to measure the height up to the exposure station. Rotations of omega (ω), phi (ϕ), and kappa (κ) were estimated. The initial estimates of the exterior orientation of the photographs are described in Table 3.5, and the initial approximations of the target points listed in Table 3.6. Photos numbered 13 and 14 were a stereo pair with a baseline of sixteen inches. Photos numbered 15 and 16 were both pointed directly at the origin (0,0,0) with a baseline of thirty inches. The entire range of the test area was kept in view for all photographs.

Panatomic-X, ISO 32, 35 mm black and white film, shot at one-half a second with an f-stop equal to f/16 or f/22 was used for the experiment. After the film was processed, one negative was repeatedly measured with a Mann comparator

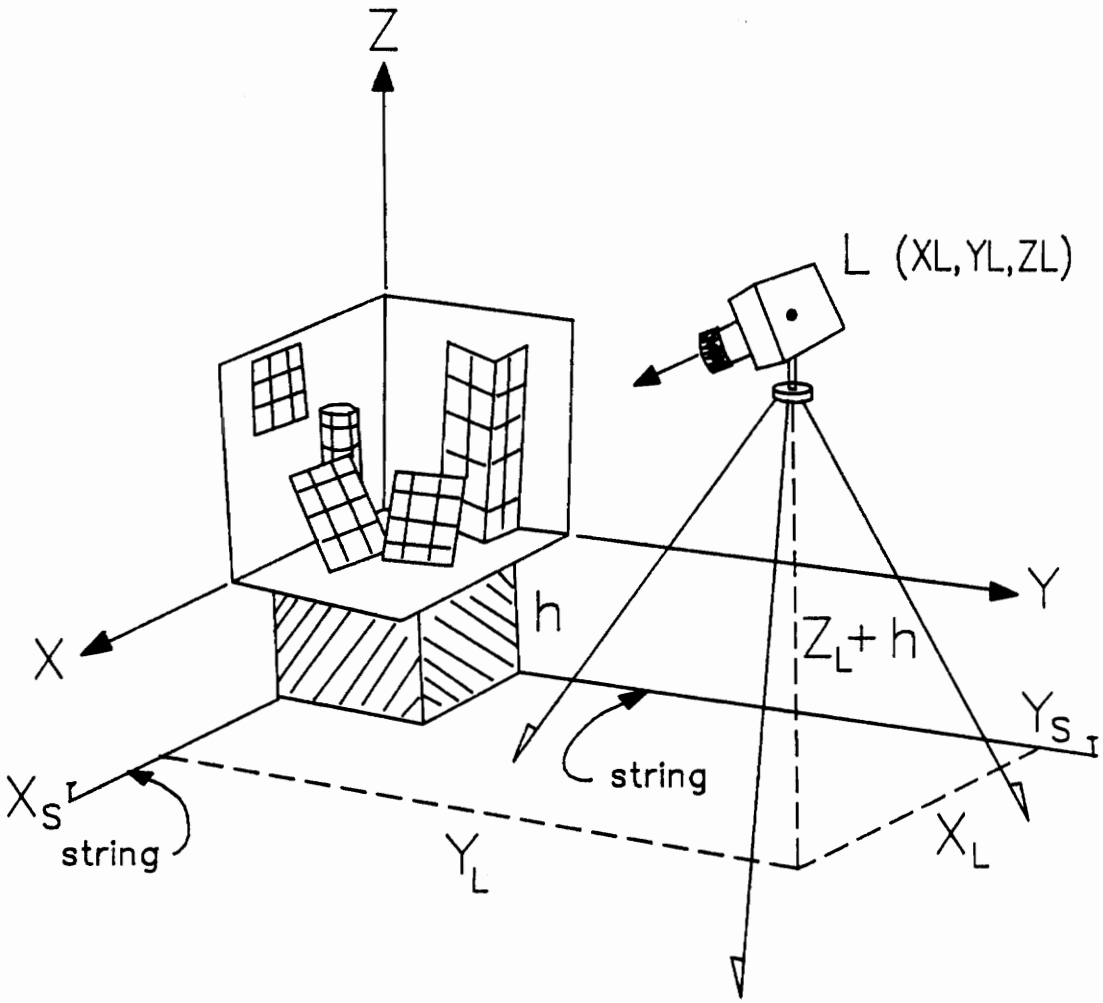

Figure 3.4 Coordinate System Used in the Nikon Experiment.

Table 3.5 Initial Estimates of the Exterior Orientation of the Nikon Photographs.

Photo #	ω	ϕ	κ	XL	YL	ZL
1	0	90	90	85	12	9.5
2	90	135	0	62	62	9.5
3	90	180	0	14	87.5	9.5
4	100	115	-10	86	32	25.5
5	100	135	-10	68	67	25.5
6	100	157	-10	39	84	25.5
7	0	70	90	88	9	43.5
8	110	110	-20	89	41	43.5
9	110	135	-20	72	65	43.5
10	110	157	-20	48	84	43.5
11	110	180	0	16	91	43.5
12	120	135	-30	60	65	73.5
13	110	135	-20	74	69	41.0
14	110	135	-20	62	80	41.0
15	110	140	-20	80	62	41.0
16	110	150	-20	59	84	41.0
17	0	90	90	85	11	10.5
18	91	135	-1	63	63	11.0
19	90	180	0	85	11	11.5
20	98	125	-8	81	43	26.0
21	98	150	-8	44	81	26.0
22	110	92	-20	91	19	43.0
23	110	135	-20	63	70	43.0

Table 3.6 Initial Approximations of the Target Points in the Test Field.

Point #	X	Y	Z	Point #	X	Y	Z
1	16.5	2.1	5.4	41	23.0	0.0	0.0
2	18.7	6.0	1.2	42	18.0	0.0	0.0
3	9.0	6.0	5.4	43	6.0	0.0	0.0
4	11.3	9.8	1.2	44	0.0	0.0	0.0
5	13.0	5.0	4.0	45	0.0	6.0	0.0
6	14.0	6.5	2.5	46	0.0	18.0	0.0
7	13.0	12.5	7.0	47	0.0	23.0	0.0
8	15.5	14.5	1.9	48	0.0	0.0	6.0
9	10.2	15.8	7.0	49	0.0	0.0	18.0
10	12.7	17.7	1.9	50	0.0	0.0	23.0
11	12.5	15.0	5.0	55	23.0	12.0	0.0
12	13.1	15.5	3.5	56	23.0	23.0	0.0
13	3.9	11.4	18.0	57	12.0	23.0	0.0
14	3.9	11.4	14.0	58	23.0	0.0	23.0
15	3.9	11.4	10.0	59	0.0	23.0	23.0
16	4.0	12.4	18.0	65	21.0	0.2	21.3
17	4.0	12.4	14.0	66	21.0	0.2	13.3
18	4.0	12.4	10.0	67	15.0	0.3	21.3
19	3.5	14.6	16.1	68	15.0	0.3	13.3
20	3.6	14.6	12.1	69	19.0	0.2	17.3
21	1.3	15.0	16.1	70	17.0	0.3	17.3
22	1.4	15.0	12.1	75	4.8	18.3	0.2
23	3.9	11.4	8.4	76	6.3	19.2	0.2
24	3.9	11.4	2.4	77	2.3	21.2	0.2
25	4.0	12.4	8.4	78	4.1	22.7	0.2
26	4.0	12.4	2.4	85	17.0	1.8	0.2
27	3.6	14.6	8.4	86	18.6	3.0	0.2
28	3.7	14.6	2.4	87	20.2	4.2	0.2
29	1.5	15.0	8.4	88	21.8	5.4	0.2
30	1.6	15.0	2.4				
31	5.7	14.0	1.5				
32	4.7	15.8	1.5				
33	11.0	1.4	14.4				
34	11.0	1.4	12.4				
35	11.0	1.4	10.4				
36	11.0	1.4	8.4				
37	9.4	2.2	14.4				
38	9.4	2.2	12.4				
39	9.4	2.2	10.4				
40	9.4	2.2	8.4				

to determine the fiducials. Figure 3.5 shows points 1 through 8 on the image format that were measured on the emulsion edge and points 11 through 14 that were computed by intersection and used as fiducial points. Point 15 was determined from the intersection of points 11 through 14. The figure also displays how the equivalent fiducials were numbered when the positive prints were measured on the digitizer. Table 3.7 lists the point values as measured on the comparator and Table 3.8 shows the values of points 11 through 15. Two sets of measurements were made from negative number 22 to ensure that results were replicative for the Mann comparator. Table 3.9 lists the fiducial values that were entered into a camera calibration file.

The test data for the Nikon photo experiment was prepared into three data files; NIKN.DIG, NIKN.CTL, and NIKN.POR. The NIKN.DIG file contains a listing of every imaged point with its name, strip number, photo number and (x,y) value. The fiducial corners, as they were measured on each enlarged positive photographic print, preceded the image point values as the successive photos were listed. Control data for each of the target points was listed in the NIKN.CTL file along with their appropriate standard deviations. The NIKN.POR file contained the photo orientation data (ω,ϕ,κ,XL,YL,ZL) for each photograph, and a weight for each parameter. A focal length of 50 mm was

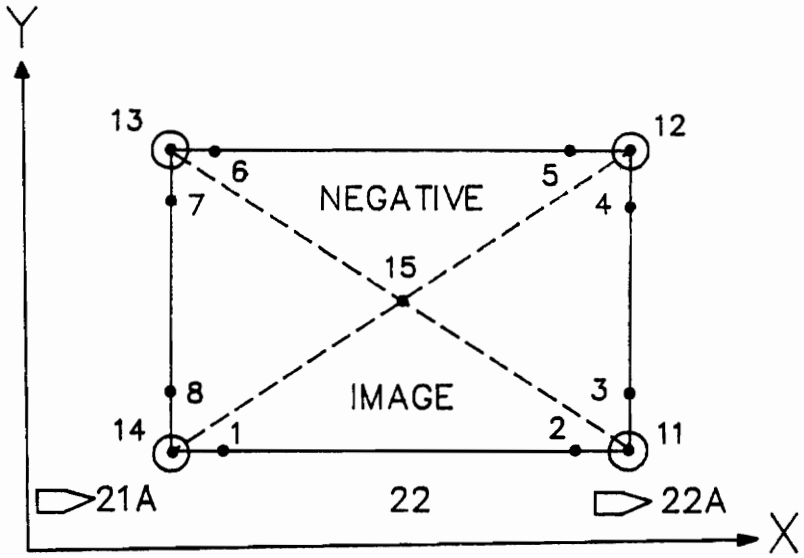

Comparator System

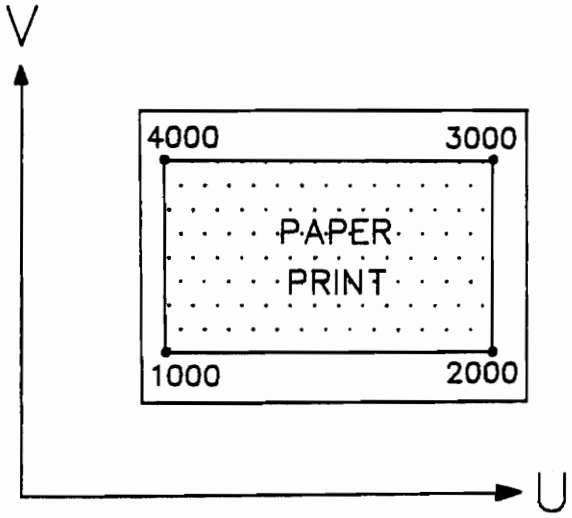

Digitizer System

Figure 3.5 Fiducial Corners.

Table 3.7 Comparator Measurements of the Negatives.

Observed Point	SET 1 X mm	SET 1 Y mm	SET 2 X mm	SET 2 Y mm
1	14.8680	11.1700	11.1295	11.1570
2	43.6520	11.2510	46.8885	11.2590
3	47.0290	13.6430	47.0285	11.4280
4	46.9885	33.4975	46.9815	35.1370
5	43.8510	35.3800	46.7729	35.3810
6	14.6600	35.3245	11.1310	35.3125
7	10.8800	33.0285	10.8760	35.0490
8	10.9310	12.7365	10.9445	11.2925

Table 3.8 Computed Fiducial Values.

Computed Point	Set Number SET 1 X mm	SET 1 Y mm	SET 2 X mm	SET 2 Y mm	Coordinate Differences X mm	Y mm
11	47.0339	11.2605	47.0288	11.2594	0.0051	0.0011
12	46.9846	35.3860	46.9810	35.3814	0.0036	0.0046
13	10.8742	35.3173	10.8752	35.3120	-0.0010	0.0053
14	10.9350	11.1589	10.9449	11.1565	-0.0099	0.0025
15	28.9692	23.2788	28.9701	23.2737	-0.0009	0.0051

Table 3.9 Fiducial Values for the Nikon Negatives.

Point	Average Values for Sets 1 & 2 X mm	Y mm	CAMRA.CAL Fiducial Values x mm	y mm	Equivalent Photo Print Coordinate Point Number
11	47.0314	11.2600	18.0618	-12.0162	2000
12	46.9826	35.3837	18.0130	12.1075	3000
13	10.8747	35.3146	-18.0949	12.0384	4000
14	10.9400	11.1577	-18.0296	-12.1185	1000
15	28.9696	23.2762	0.0000	0.0000	

entered into the camera calibration file where a Nikon camera type was entered. A preprocessor step that included an affine transformation was used to transform the digitizer stage coordinates to the negative image coordinate system. Testing of the Nikon data was delayed until successful experimentation of the Quattro data was completed.

3.5 Real World Data Using a Nikon Camera

Four of the Nikon photographs and thirty of the target points were selected for a bundle adjustment. The photographs and target area provided a geometrical relationship similar to the data created with the Quattro spread sheet. Eight of the chosen targets were weighted as control points and the remaining twenty-two were weighted as pass points. The configuration of the network is illustrated in Figure 3.6 with the camera positions shown in Figure 3.7. The average distance from the coordinate origin to the camera exposure stations was approximately one hundred inches (eight and one-half feet). A zoom lens was attached to the Nikon FM2 camera and set to approximately 50 mm of its 35 mm to 105 mm range. The initial estimated coordinates are listed in Table 3.10 and the observed orientation parameters are seen in Table 3.11.

In the self-calibrating bundle adjustment, the corrections to three inner cone parameters (df, x_0, y_0) were

computed. Table 3.12 shows the results of different adjustments that used the Nikon data where the approximations to focal length, principal point offset, and exterior orientation weights were varied. Two different weight sets were applied which resulted in a dramatic change to the correction to the focal length. The weight sets (standard deviation sets) were determined from the observed values (first approximations) of the orientation parameters, image measurements, and target point coordinates. The weights were chosen to equal three times that of the expected standard deviation. Each subsequent bundle adjustment used the same original input data even though different weight sets were applied. In the case where all four photographs were used, a correction of df = 3.916mm occurred with weight set #1, and a correction of df = 1.194 mm resulted with weight set #2. This showed that as the standard deviation for the exterior orientation elements was relaxed, they were freer to adjust and less adjustment was made to the correction to the focal length. When only two photos were utilized, as opposed to four photographs, identical results were obtained.

The initial settings of focal length and principal point offset were updated for four successive runs to allow the corrections to settle. The standard deviation of unit adjustment remained the same throughout the different runs

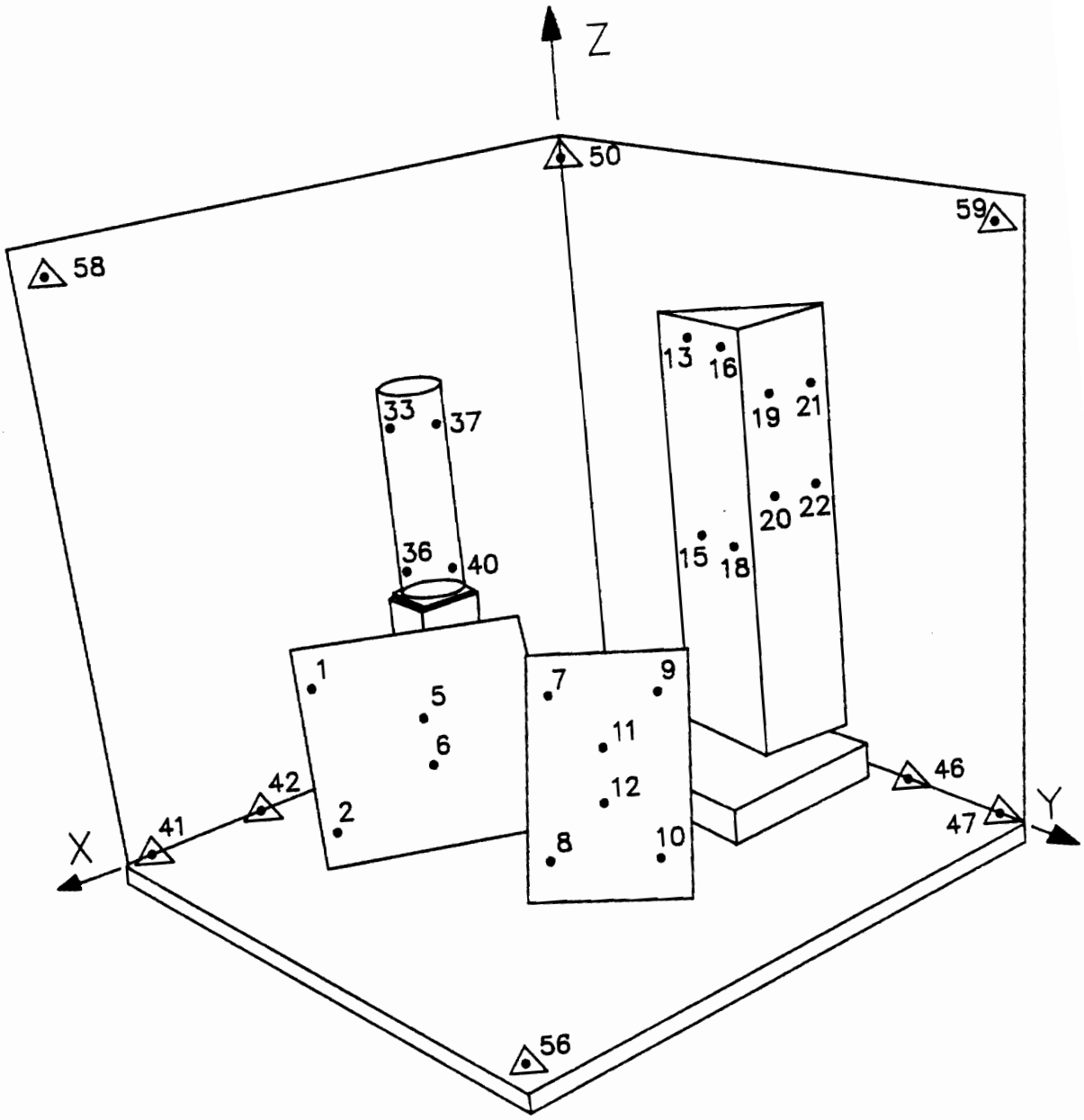

Figure 3.6 Control Points and Pass Points.

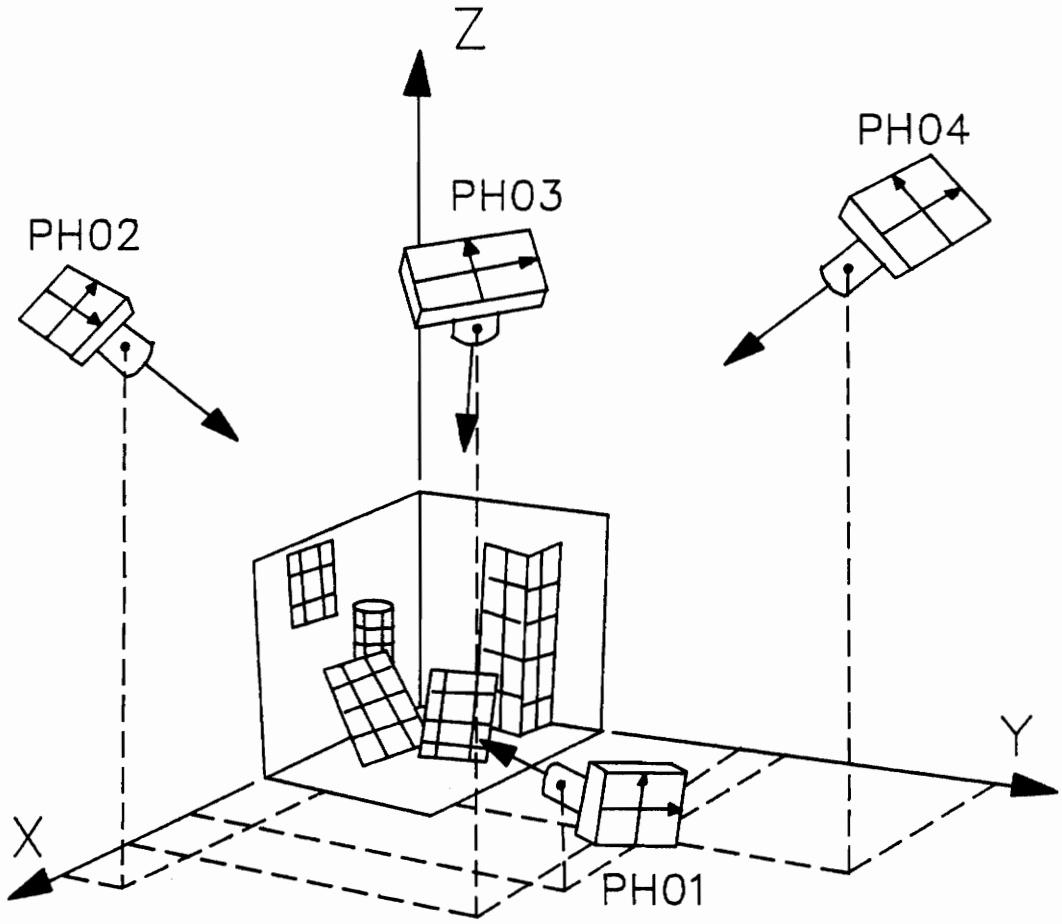

Figure 3.7 Nikon Camera Locations.

Table 3.10 Nikon Target Points Used.

Point	X(in)	Y(in)	Z(in)	Point	X(in)	Y(in)	Z(in)
1	16.5	2.1	5.4	20	3.6	14.6	12.1
2	18.7	6.0	1.2	21	1.3	15.0	16.1
5	13.0	5.0	4.0	22	1.4	15.0	12.1
6	14.0	6.5	2.5	33	11.0	1.4	14.4
7	13.0	12.5	7.0	36	11.0	1.4	8.4
8	15.5	14.5	1.9	37	9.4	2.2	14.4
9	10.2	15.8	7.0	40	9.4	2.2	8.4
10	12.7	17.7	1.9	41[1]	23.0	0.0	0.0
11	12.5	15.0	5.0	42[1]	18.0	0.0	0.0
12	13.1	15.5	3.5	46[1]	0.0	18.0	0.0
13	3.9	11.4	18.0	47[1]	0.0	23.0	0.0
15	3.9	11.4	10.0	50[1]	0.0	0.0	23.0
16	4.0	12.4	18.0	56[1]	23.0	23.0	0.0
18	4.0	12.4	10.0	58[2]	23.0	0.0	23.0
19	3.5	14.6	16.1	59[2]	0.0	23.0	23.0

[1] Indicates control point held in the X, Y, and Z directions
[2] Indicates control point held in the Z direction only

Table 3.11 Nikon Exposure Stations (Approximations).

Photo #	ω	ϕ	κ	XL (in)	YL (in)	ZL (in)
PH01	100°	135°	-10°	68.0	67.0	25.5
PH02	0°	70°	90°	88.0	9.0	43.5
PH03	110°	135°	-20°	72.0	65.0	43.5
PH04	110°	157°	-20°	48.0	84.0	43.5

Table 3.12 Results of Nikon Experimental Data.

(Initial approximations: f = 50mm, x_0 = 0mm, y_0 = 0mm)

Wt. Set #	# Phts	Corrections (mm)			σ_0^2 (mm)	d. o. f.	RMS (in)		
		df	x_0	y_0			X	Y	Z
1	2	3.501	-.154	.964	.00953	120	.0104	.0071	.0117
1	4	3.916	.191	1.537	.01358	228	.0169	.0094	.0185
2	2	3.501	-.154	.964	.00953	120	.0104	.0071	.0117
2	4	1.194	.252	-.034	.00109	228	.0063	.0080	.0129

(Initial approx.: f = 51.2mm, x_0 = 0.25mm, y_0 =-0.03mm)

2	4	0.444	.074	.104	.01082	228	.0071	.0079	.0108

(Initial approx.: f = 51.9mm, x_0 = 0.356mm, y_0 =0.184mm)

2	4	0.032	.003	.022	.01084	228	.0078	.0080	.0097

Item	Weight Set* #1 σ (±)	Weight Set* #2 σ (±)
Image Measurement	0.050 mm	0.050 mm
Control Points	0.040 in	0.040 in
Pass Points	1.000 in	1.000 in
External Orientation:		
ω, ϕ, κ	0.087 rad	0.349 rad
XL, YL, ZL	1.000 in	20.000 in
Additional Parameters:		
df	1.000 mm	1.000 mm
x_0, y_0	1.000 mm	1.000 mm

* Only the Z direction was weighted as control for points 58 and 59. Their X and Y dimensions were weighted the same as the pass points.

as well as the RMS values for both control and pass point residuals. Checks on the adjusted values for the non-control points revealed that dimensions were recovered to within one-half of one percent of their known value. For example, the known value for the distance between points numbered 7 and 8 was 6.00 inches and the value recovered in the self-calibration adjustment was 5.98 inches for the same distance.

The results obtained with the Nikon and Quattro data sets support the concept that non-metric cameras may be used to recover orientation parameters that are unstable, and applied to mensuration that involves three dimensional coordinate geometry. The initial parameter approximations and weighting parameters were very important to the outcome of the bundle adjustment. When the standard deviations were increased, the interior and exterior orientation parameters were freer to adjust. The initial approximation for the focal length was updated for successive adjustments but its value did not converge easily. The focal length in the Nikon data fluctuated back and forth, plus and minus corrections, to within two percent of the final approximated value. The principal point offset was recovered to 0.3 percent of the true value and to twelve percent of the approximated value. Focal length was recovered from the Quattro test data to one-tenth of one percent of the actual value.

CHAPTER 4

CONCLUSIONS AND RECOMMENDATIONS

4.1 Conclusions

A self-calibration system for non-metric cameras was developed for use in close-range photogrammetry. The adjustment model was incorporated into an existing bundle adjustment software system and tested. Subsequent runs and experiments led to the following conclusions:

1. Additional parameters from an actual test case were recovered from the adjustment program to 0.3 percent of the true value and to within twelve percent of the approximated values.
2. Distances between target points in the two-foot by two-foot by two-foot test model were recovered to within one half of one percent of their actual values when 35 mm film images were taken from a distance of about 100 inches away.
3. Software tools have been developed to allow further study and evaluation of the remaining additional parameters that were included in the math model.
4. Modeling and software is now available for a comparative study between the Direct Linear Transformation (DLT) parameters and self-calibration parameters.

5. Similarly, the self-calibration modeling and former DLT modeling software is a promising tool for mensuration tests and experiments with video and Charge Coupled Device (CCD) imagery.
6. The technique utilized encompasses many of the positive attributes of the methods investigated and is not limited to closely aligned coordinate systems.
7. For the data used, the initial set of orientational parameter weights greatly affected the outcome of the object space coordinate determination and precision.

4.2 Recommendations

From what was learned about the self-calibration procedure and the bundle adjustment software, it is recommended that further study and experimentation be conducted. The complete self-calibration model proposed in this study was not fully utilized. Future experimentation should incorporate the remaining additional parameters and investigate the different additional parameter distortion variables. A metric camera that has been pre-calibrated by traditional methods would be best for successive experiments because the behavior of the additional parameters could then be regulated.

A comparison should be made between the self-calibration method and conventional collinearity,

factory, calibration. The Direct Linear Transformation (DLT) method will also provide an interesting comparison against the self-calibration adjustment.

It is recommended that the study be extended to incorporate the use of video and CCD camera systems. Test imagery may be distorted to simulate video imagery and then the self-calibration adjustment method may be applied. If an acceptable degree of accuracy is achieved, then tests with a video system should be conducted.

A camera to target distance of eight to ten feet was used for the self-calibration study. Other close-range cases must be considered. Another real world test is to photograph the athletic dormitory on the main campus of Virginia Tech. The building will provide a different scale from the conducted experiment, and its curved surface will provide the needed depth in the images. The windows, for instance, should be measured by photogrammetric means and the results checked by physically measuring the windows with actual survey equipment. The self-calibration model is also available for application in other terrestrial purposes and even aerial photography.

The different weight sets that were applied to the orientational parameters greatly affected the corrections to the object space coordinates. This phenomenon deserves additional study.

The additional parameters K_1, K_2, P_1, P_2, a_4, b_2, and b_6 must first be studied before any other additional parameters are investigated. It is also recommended that relative control or constraints be incorporated in a follow up study. Vanishing point information, straight lines, or freer control point weights should be included in the study.

APPENDIX A

PHOTOGRAMMETRIC CONCEPTS AND MATH MODELS NECESSARY TO SET UP A BUNDLE SOLUTION

A.1 Collinearity and Coplanarity

The foundation of photogrammetry is based on a pair of projective equations. These projective equations, in turn, are based on the assumptions of collinearity and coplanarity. Collinearity states that an object point, its image, and the camera's center of projection (exposure station) all lie on the same line. Figure A.1 illustrates the collinearity condition with point P as the object point, point p as the image, and point L as the exposure station. Coplanarity is satisfied when the object point, its image on two adjacent photographs, and the corresponding exposure stations all lie in a common plane. The coplanarity condition is represented in Figure A.2 with points P, p_1, p_2, ${}_1L$, and ${}_2L$ all lying in the same plane.

A.2 The Rotation Matrix

The orientation of a camera with respect to a three-dimensional coordinate system may be expressed by three rotation angles; omega (ω), phi (ϕ), and kappa (κ). These angles correspond to a right-handed coordinate system where ω, ϕ, and κ are defined as positive if they rotate

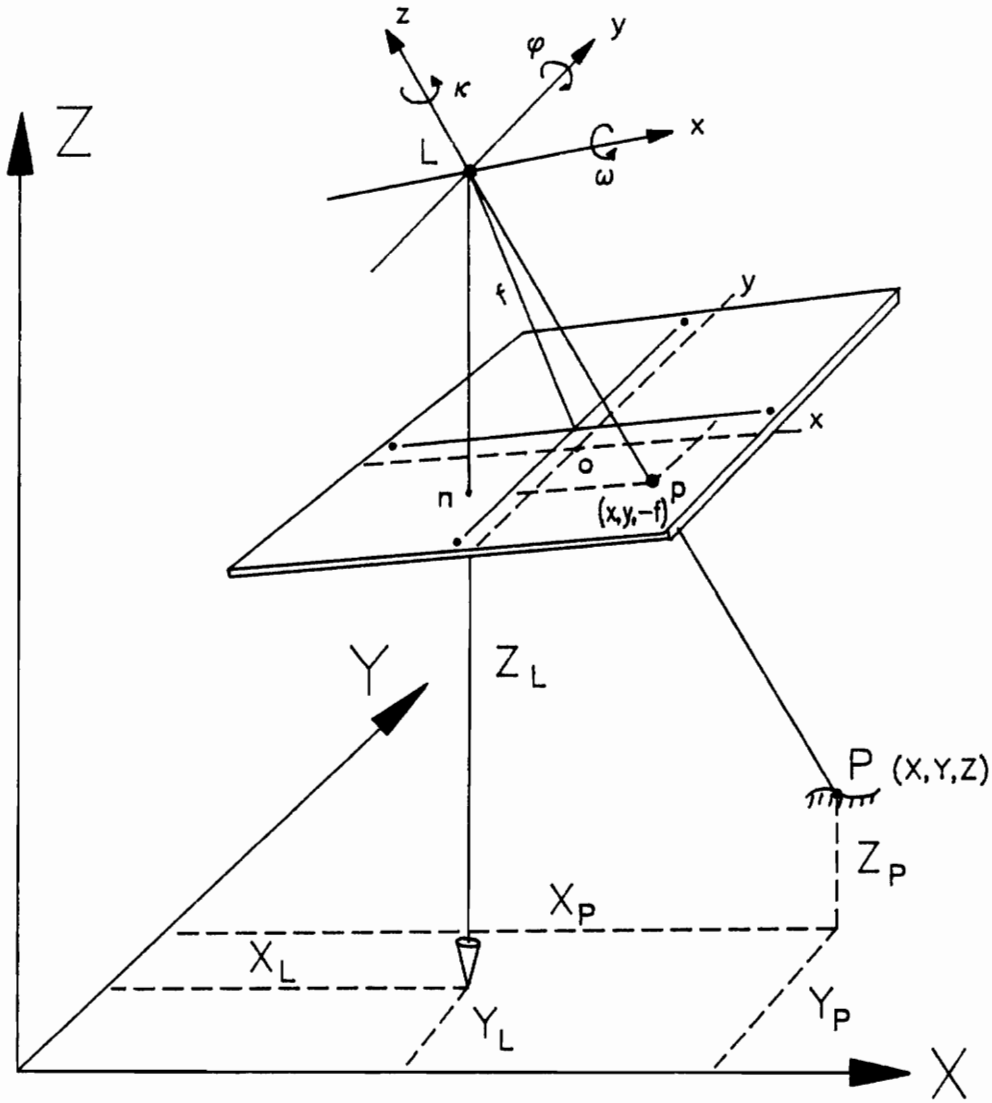

Figure A.1 Collinearity Condition.

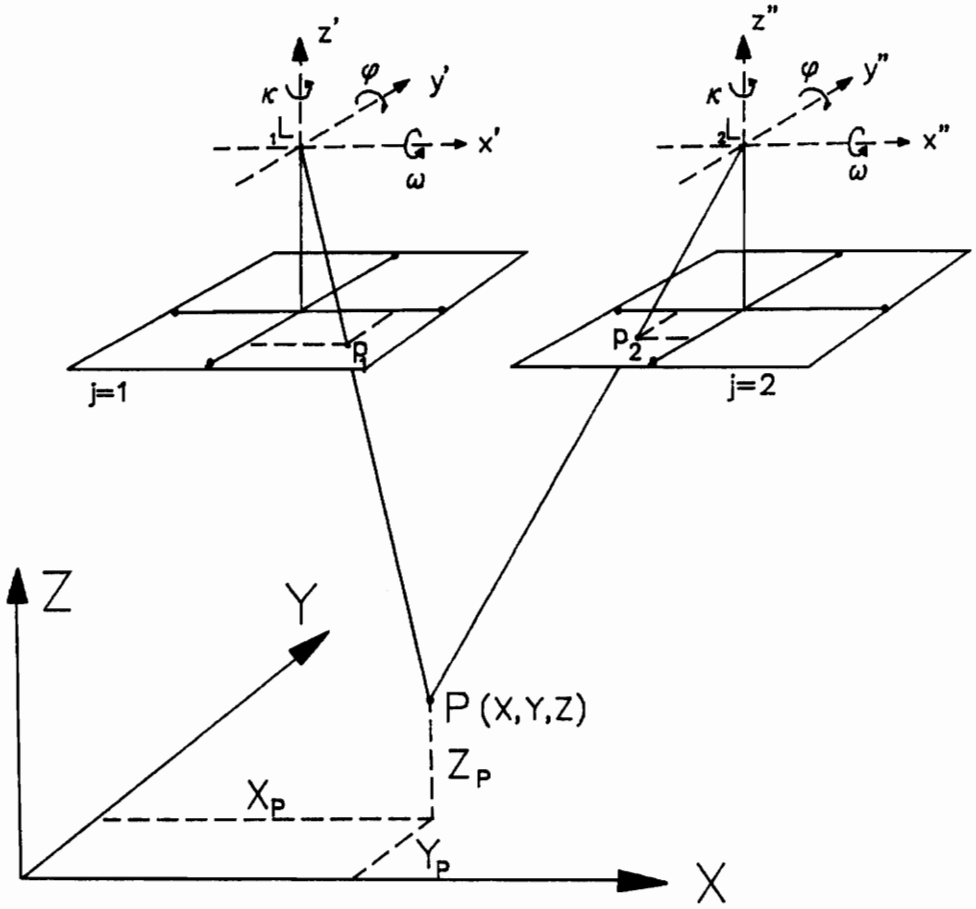

Figure A.2 Coplanarity Condition.

counter-clockwise when viewed from the positive ends of the respective X, Y, and Z axes. The coordinates of a point (x,y,z) in a three times rotated XYZ coordinate system can be expressed as

$$x = X(\cos\phi\cos\kappa) + Y(\sin\omega\sin\phi\cos\kappa + \cos\omega\sin\kappa) + Z(-\cos\omega\sin\phi\cos\kappa + \sin\omega\sin\kappa) \quad (A.1)$$

$$y = X(-\cos\phi\sin\kappa) + Y(-\sin\omega\sin\phi\sin\kappa + \cos\omega\cos\kappa) + Z(\cos\omega\sin\phi\sin\kappa + \sin\omega\cos\kappa) \quad (A.2)$$

$$z = X(\sin\phi) + Y(-\sin\omega\cos\phi) + Z(\cos\omega\cos\phi). \quad (A.3)$$

When m's are substituted for the coefficients of X, Y, and Z, the equation becomes

$$x = m_{11}X + m_{12}Y + m_{13}Z \quad (A.4)$$

$$y = m_{21}X + m_{22}Y + m_{23}Z \quad (A.5)$$

$$z = m_{31}X + m_{32}Y + m_{33}Z \quad (A.6)$$

where

$$m_{11} = \cos\phi\cos\kappa$$

$$m_{12} = \sin\omega\sin\phi\cos\kappa + \cos\omega\sin\kappa$$

$$m_{13} = -\cos\omega\sin\phi\cos\kappa + \sin\omega\sin\kappa$$

$$m_{21} = -\cos\phi\sin\kappa$$

$$m_{22} = -\sin\omega\sin\phi\sin\kappa + \cos\omega\cos\kappa$$

$$m_{23} = \cos\omega\sin\phi\sin\kappa + \sin\omega\cos\kappa$$

$$m_{31} = \sin\phi$$

$$m_{32} = -\sin\omega\cos\phi$$

$$m_{33} = \cos\omega\cos\phi.$$

Equations (A.4) to (A.6) may be expressed as

$$\begin{bmatrix} x \\ y \\ z \end{bmatrix} = \begin{bmatrix} m_{11} & m_{12} & m_{13} \\ m_{21} & m_{22} & m_{23} \\ m_{31} & m_{32} & m_{33} \end{bmatrix} \begin{bmatrix} X \\ Y \\ Z \end{bmatrix} \tag{A.7}$$

where the **M** matrix

$$\mathbf{M} = \begin{bmatrix} m_{11} & m_{12} & m_{13} \\ m_{21} & m_{22} & m_{23} \\ m_{31} & m_{32} & m_{33} \end{bmatrix} \tag{A.8}$$

is known as the rotation matrix. Its elements are direction cosines which relate the xyz and XYZ coordinate axis systems.

A.3 Collinearity Condition Equations

Photographic coordinates may be expressed as ${}_jx_i$ and ${}_jy_i$ to symbolize the image of point i on photograph j. With these conventions, the collinearity condition may be written as

$$\begin{bmatrix} {}_jx_i - x_0 \\ {}_jy_i - y_0 \\ -f \end{bmatrix} = \lambda \begin{bmatrix} m_{11} & m_{12} & m_{13} \\ m_{21} & m_{22} & m_{23} \\ m_{31} & m_{32} & m_{33} \end{bmatrix} \begin{bmatrix} X_i - {}_jXL \\ Y_i - {}_jYL \\ Z_i - {}_jZL \end{bmatrix} \tag{A.9}$$

where

x_0, y_0 = photo coordinates of the principal point

f = focal length of the camera

λ = scale factor

$m_{11}, m_{12}, \ldots, m_{33}$ = elements of the rotation matrix

X_i, Y_i, Z_i = ground coordinates of point i

${}_jXL$, ${}_jYL$, ${}_jZL$ = ground coordinates of the exposure station L of photograph j.

Multiplying the right side of expression (A.9) and equating the terms to the left, then dividing through by the third equation gives the collinearity equations

$$ {}_jx_i - x_0 = -f \left[\frac{m_{11}(X_i - {}_jXL) + m_{12}(Y_i - {}_jYL) + m_{13}(Z_i - {}_jZL)}{m_{31}(X_i - {}_jXL) + m_{32}(Y_i - {}_jYL) + m_{33}(Z_i - {}_jZL)} \right] \tag{A.10} $$

and

$$ {}_jy_i - y_0 = -f \left[\frac{m_{21}(X_i - {}_jXL) + m_{22}(Y_i - {}_jYL) + m_{23}(Z_i - {}_jZL)}{m_{31}(X_i - {}_jXL) + m_{32}(Y_i - {}_jYL) + m_{33}(Z_i - {}_jZL)} \right]. \tag{A.11} $$

The collinearity equations are nonlinear and often need to be linearized. This may be accomplished by using Taylor's theorem. Equations (A.10) and (A.11) are rewritten as

$$ {}_jx_i - x_0 = -f \frac{[\ \mathbf{r}\ ]}{[\ \mathbf{q}\ ]} \tag{A.12} $$

$$ {}_jy_i - y_0 = -f \frac{[\ \mathbf{s}\ ]}{[\ \mathbf{q}\ ]} \tag{A.13} $$

where

$$ \mathbf{r} = m_{11}(X_i - {}_jXL) + m_{12}(Y_i - {}_jYL) + m_{13}(Z_i - {}_jZL) \tag{A.14} $$

$$ \mathbf{s} = m_{21}(X_i - {}_jXL) + m_{22}(Y_i - {}_jYL) + m_{23}(Z_i - {}_jZL) \tag{A.15} $$

$$ \mathbf{q} = m_{31}(X_i - {}_jXL) + m_{32}(Y_i - {}_jYL) + m_{33}(Z_i - {}_jZL). \tag{A.16} $$

Equations (A.12) and (A.13) are then expressed as

$$ {}_jx_i - x_0 = -f \frac{[\ \mathbf{r}\ ]}{[\ \mathbf{q}\ ]} \tag{A.17} $$

$$ {}_jy_i - y_0 = -f \frac{[\ \mathbf{s}\ ]}{[\ \mathbf{q}\ ]} \tag{A.18} $$

or

$$ F_x = 0 = \mathbf{q}({}_jx_i - x_0) + \mathbf{r}f \tag{A.19} $$

$$ F_y = 0 = \mathbf{q}({}_jy_i - y_0) + \mathbf{s}f. \tag{A.20} $$

Assuming x_0, y_0, and f are constant, Taylor's theorem then expresses (A.19) and (A.20) in linearized form as

$$ 0 = (F_x)_0 + \tag{A.21} $$

$$ + \left[\frac{\partial F_x}{\partial {}_jx_i} \right]_0 d{}_jx_i + \left[\frac{\partial F_x}{\partial {}_j\omega} \right]_0 d{}_j\omega + \left[\frac{\partial F_x}{\partial {}_j\phi} \right]_0 d{}_j\phi + \left[\frac{\partial F_x}{\partial {}_j\kappa} \right]_0 d{}_j\kappa $$

$$ + \left[\frac{\partial F_x}{\partial {}_jXL} \right]_0 d{}_jXL + \left[\frac{\partial F_x}{\partial {}_jYL} \right]_0 d{}_jYL + \left[\frac{\partial F_x}{\partial {}_jZL} \right]_0 d{}_jZL $$

$$+ \left[\frac{\partial F_x}{\partial X_i} \right]_0 dX_i + \left[\frac{\partial F_x}{\partial Y_i} \right]_0 dY_i + \left[\frac{\partial F_x}{\partial Z_i} \right]_0 dZ_i$$

$$0 = (F_y)_0 + \tag{A.22}$$

$$+ \left[\frac{\partial F_y}{\partial {}_jy_i} \right]_0 d_jy_i + \left[\frac{\partial F_y}{\partial {}_j\omega} \right]_0 d_j\omega + \left[\frac{\partial F_y}{\partial {}_j\phi} \right]_0 d_j\phi + \left[\frac{\partial F_y}{\partial {}_j\kappa} \right]_0 d_j\kappa$$

$$+ \left[\frac{\partial F_y}{\partial {}_jXL} \right]_0 d_jXL + \left[\frac{\partial F_y}{\partial {}_jYL} \right]_0 d_jYL + \left[\frac{\partial F_y}{\partial {}_jZL} \right]_0 d_jZL$$

$$+ \left[\frac{\partial F_y}{\partial X_i} \right]_0 dX_i + \left[\frac{\partial F_y}{\partial Y_i} \right]_0 dY_i + \left[\frac{\partial F_y}{\partial Z_i} \right]_0 dZ_i$$

where

$x_i = {}_jx_i - x_0$

$y_i = {}_jy_i - y_0$

$(F_x)_0$, $(F_x)_0$ = functions F_x, and F_y evaluated at some initial approximations for the unknowns $\omega, \phi, \kappa, {}_jXL, {}_jYL, {}_jZL, X_i, Y_i, Z_i$

$(\partial F_x/\partial x_i)_0$, $(\partial F_x/\partial \omega)_0$, $(\partial F_x/\partial \phi)_0$, etc. = partial derivatives of the functions F_x and F_y evaluated at the initial approximations

dx_i, $d\omega$, $d\phi$, etc. = unknown corrections to be applied to the initial approximations.

The terms $d_j x_i$ and $d_j y_i$ are corrections to ${}_j x_i$ and ${}_j y_i$ and can be considered as residuals described by

$$d_j x_i = v_{j x_i} = b_{11} d_j\omega + b_{12} d_j\phi + b_{13} d_j\kappa - b_{14} d_j XL - b_{15} d_j YL - b_{16} d_j ZL + b_{14} dX_i + b_{15} dY_i + b_{16} dZ_i + J \tag{A.23}$$

$$d_j y_i = v_{j y_i} = b_{21} d_j\omega + b_{22} d_j\phi + b_{23} d_j\kappa - b_{24} d_j XL - b_{25} d_j YL - b_{26} d_j ZL + b_{24} dX_i + b_{25} dY_i + b_{26} dZ_i + K \tag{A.24}$$

where the b coefficients are shown by the general equations

$$b_{11} = \left[\frac{\partial F_x}{\partial \omega} \right] \qquad b_{21} = \left[\frac{\partial F_y}{\partial \omega} \right]$$

$$b_{12} = \left[\frac{\partial F_x}{\partial \phi} \right] \qquad b_{22} = \left[\frac{\partial F_y}{\partial \phi} \right]$$

$$b_{13} = \left[\frac{\partial F_x}{\partial \kappa} \right] \qquad b_{23} = \left[\frac{\partial F_y}{\partial \kappa} \right]$$

$$b_{14} = \left[\frac{\partial F_x}{\partial X_i} \right] \qquad b_{24} = \left[\frac{\partial F_y}{\partial X_i} \right]$$

$$b_{15} = \left[\frac{\partial F_x}{\partial Y_i} \right] \qquad b_{25} = \left[\frac{\partial F_y}{\partial Y_i} \right]$$

$$b_{16} = \left[\frac{\partial F_x}{\partial Z_i} \right] \qquad b_{26} = \left[\frac{\partial F_y}{\partial Z_i} \right]$$

$$J = (F_X)_0 \qquad\qquad K = (F_Y)_0$$

and

$$b_{11} = \frac{x}{q}(-m_{33}\Delta Y + m_{32}\Delta Z) + \frac{f}{q}(-m_{13}\Delta Y + m_{12}\Delta Z)$$

$$b_{12} = \frac{x}{q}[\Delta X \cos\phi + \Delta Y(\sin\omega \sin\phi) + \Delta Z(-\sin\phi \cos\omega)]$$

$$+ \frac{f}{q}[\Delta X(-\sin\phi \cos\kappa) + \Delta Y(\sin\omega \cos\phi \cos\kappa)$$

$$+ \Delta Z(-\cos\omega \cos\phi \cos\kappa)]$$

$$b_{13} = \frac{f}{q}(m_{21}\Delta X + m_{22}\Delta Y + m_{23}\Delta Z)$$

$$b_{14} = \frac{x}{q}(m_{31}) + \frac{f}{q}(m_{11})$$

$$b_{15} = \frac{x}{q}(m_{32}) + \frac{f}{q}(m_{12})$$

$$b_{16} = \frac{x}{q}(m_{33}) + \frac{f}{q}(m_{13})$$

$$J = \frac{(qx + rf)}{q}$$

$$b_{21} = \frac{y}{q}(-m_{33}\Delta Y + m_{32}\Delta Z) + \frac{f}{q}(-m_{23}\Delta Y + m_{22}\Delta Z)$$

$$b_{22} = \frac{y}{q}[\Delta X \cos\phi + \Delta Y(\sin\omega \sin\phi) + \Delta Z(-\cos\omega \sin\phi)]$$

$$+ \frac{f}{q}[\Delta X(\sin\phi \sin\kappa) + \Delta Y(-\sin\omega \cos\phi \sin\kappa)$$

$$+ \Delta Z(\cos\omega \cos\phi \sin\kappa)]$$

$$b_{23} = \frac{f}{q}(-m_{11}\Delta X - m_{12}\Delta Y - m_{13}\Delta Z)$$

$$b_{24} = \frac{y}{q}(m_{31}) + \frac{f}{q}(m_{21})$$

$$b_{25} = \frac{y}{q}(m_{32}) + \frac{f}{q}(m_{22})$$

$$b_{26} = \frac{y}{q}(m_{33}) + \frac{f}{q}(m_{23})$$

$$K = \frac{(qy + sf)}{q}$$

$$x_i = {}_jx_i - x_0$$

$$y_i = {}_jy_i - y_0$$

$$\Delta X = X_i - {}_jZL$$

$$\Delta Y = Y_i - {}_jZL$$

$$\Delta Z = Z_i - {}_jZL.$$

It should be noted that $(\partial F_x/\partial {}_jx_i) = (\partial F_y/\partial {}_jy_i) = q$. When the terms qd_jx_i and qd_jy_i are taken to the left-hand side of equations (A.21) and (A.22) the resulting expression is divided through by q which leaves the simplified forms (A.23) and (A.24) of the linearized collinearity equations.

A.4 Normal Equations Using Absolute Orientation

There are nine unknown parameters to solve for when using the method of absolute orientation. These variables are ω, ϕ, κ, ${}_jXL$, ${}_jYL$, ${}_jZL$, X_i, Y_i, and Z_i. The number of total unknowns depends on the number of photographs and the number of ground points involved in the solution.

Assuming f, x_0, and y_0 are perfectly known, a least squares adjustment begins by placing equations (A.17) and (A.18) into the general form

$$\mathbf{Av} + \mathbf{B}\Delta = \mathbf{F} \tag{A.25}$$

where

$$\mathbf{A} = \left[\frac{\partial \mathbf{F}}{\partial \mathbf{l}} \right] = \begin{bmatrix} 1 & 0 \\ 0 & 1 \end{bmatrix} = \mathbf{I} \quad \text{(The identity matrix)}$$

$$\mathbf{l} = \text{observations}$$

$$\mathbf{v} = \begin{bmatrix} v_{jx_i} \\ v_{jy_i} \end{bmatrix}$$

$$\mathbf{B} = \left[\frac{\partial \mathbf{F}}{\partial \text{par.}} \right]$$

$$= \begin{bmatrix} b_{11} & b_{12} & b_{13} & (-b_{14}) & (-b_{15}) & (-b_{16}) & b_{14} & b_{15} & b_{16} \\ b_{21} & b_{22} & b_{23} & (-b_{24}) & (-b_{25}) & (-b_{26}) & b_{24} & b_{25} & b_{26} \end{bmatrix}$$

$$\text{par.} = \text{unknown parameters}$$

$$\Delta = [\ \Delta\text{par.}\ ]$$

$$= [\ \Delta\omega_j\ \Delta\phi_j\ \Delta\kappa_j\ \Delta_j XL\ \Delta_j YL\ \Delta_j ZL\ \Delta X_i\ \Delta Y_i\ \Delta Z_i\ ]^T$$

$$\mathbf{F} = \begin{bmatrix} F_x \\ F_y \end{bmatrix} = \begin{bmatrix} -J \\ -K \end{bmatrix}.$$

The unknown parameters are then partitioned to read

$$\mathbf{V} + [\ \dot{\mathbf{B}}\ \ \ddot{\mathbf{B}}\ ] \begin{bmatrix} \dot{\Delta} \\ \ddot{\Delta} \end{bmatrix} = \mathbf{F} \tag{A.26}$$

or

$$\underset{(2,1)}{\mathbf{V}} + \underset{(2,6)}{\dot{\mathbf{B}}}\ \underset{(6,1)}{\dot{\Delta}} + \underset{(2,3)}{\ddot{\mathbf{B}}}\ \underset{(3,1)}{\ddot{\Delta}} = \underset{(2,1)}{\mathbf{F}} \tag{A.27}$$

where

$$\dot{\mathbf{B}} = \begin{bmatrix} b_{11} & b_{12} & b_{13} & (-b_{14}) & (-b_{15}) & (-b_{16}) \\ b_{21} & b_{22} & b_{23} & (-b_{24}) & (-b_{25}) & (-b_{26}) \end{bmatrix}$$

$$\ddot{\mathbf{B}} = \begin{bmatrix} b_{14} & b_{15} & b_{16} \\ b_{24} & b_{25} & b_{26} \end{bmatrix}$$

$$\dot{\Delta} = [\ \Delta\omega_j \quad \Delta\phi_j \quad \Delta\kappa_j \quad \Delta_j XL \quad \Delta_j YL \quad \Delta_j ZL\ ]^T$$

$$\ddot{\Delta} = [\ \Delta X_i \quad \Delta Y_i \quad \Delta Z_i\ ]^T.$$

A least squares solution to the above model results in the normal equation

$$(\ \mathbf{B}^T\ \mathbf{W}\ \mathbf{B}\ )\ \Delta = \mathbf{B}^T\ \mathbf{W}\ \mathbf{F}. \tag{A.28}$$

When partitioned, the normal equation (A.28) looks like

$$\begin{bmatrix} \dot{\mathbf{B}}^T\ \mathbf{W}\ \dot{\mathbf{B}} & \dot{\mathbf{B}}^T\ \mathbf{W}\ \ddot{\mathbf{B}} \\ \ddot{\mathbf{B}}^T\ \mathbf{W}\ \dot{\mathbf{B}} & \ddot{\mathbf{B}}^T\ \mathbf{W}\ \ddot{\mathbf{B}} \end{bmatrix} \begin{bmatrix} \dot{\Delta} \\ \ddot{\Delta} \end{bmatrix} = \begin{bmatrix} \dot{\mathbf{B}}^T\ \mathbf{W}\ \mathbf{F} \\ \ddot{\mathbf{B}}^T\ \mathbf{W}\ \mathbf{F} \end{bmatrix} \tag{A.29}$$

or

$$\begin{bmatrix} \mathbf{N}_{11} & \mathbf{N}_{12} \\ \mathbf{N}_{21} & \mathbf{N}_{22} \end{bmatrix} \begin{bmatrix} \dot{\Delta} \\ \ddot{\Delta} \end{bmatrix} = \begin{bmatrix} \mathbf{T}_1 \\ \mathbf{T}_2 \end{bmatrix}. \tag{A.30}$$

The discrepancies between the a priori observed values and the corrected values are defined as

$$\epsilon_P = (P^\circ - P) = v_P - \dot{\Delta} \tag{A.31}$$

$$\epsilon_X = (X^\circ - X) = v_X - \ddot{\Delta} \tag{A.32}$$

where

ϵ_P = the discrepancy associated with the exterior orientation parameters

ϵ_X = the discrepancy associated with the ground coordinates

P°, X° = corrected values for the parameters

P, X = a priori observed/estimated parameter values.

The total set of linearized normal equations becomes

$$\begin{bmatrix} \mathbf{N}_{11} + \mathbf{W}_P & \mathbf{N}_{12} \\ \mathbf{N}_{21} & \mathbf{N}_{22} + \mathbf{W}_X \end{bmatrix} \begin{bmatrix} \dot{\Delta} \\ \ddot{\Delta} \end{bmatrix} = \begin{bmatrix} \mathbf{T}_1 - \mathbf{W}_P \epsilon_P \\ \mathbf{T}_2 - \mathbf{W}_X \epsilon_X \end{bmatrix} \tag{A.33}$$

where

ϵ_P, ϵ_X = zero on the first iteration then updated by $\dot{\Delta}$ and $\ddot{\Delta}$

$\mathbf{W}_P$, $\mathbf{W}_X$ = 3x3 weight matrices formulated to account for the difference in units.

A.5 Reduced Normal Equations

When the normal matrix is very large a straightforward computational solution may be difficult to achieve. The block diagonality of some of the components is used to achieve a reduction. Firstly, equation (A.33) is rewritten as

$$\begin{bmatrix} \mathbf{N}_{11} & \mathbf{N}_{12} \\ \mathbf{N}_{21} & \mathbf{N}_{22} \end{bmatrix} \begin{bmatrix} \mathbf{X}_1 \\ \mathbf{X}_2 \end{bmatrix} = \begin{bmatrix} \mathbf{T}_1 \\ \mathbf{T}_2 \end{bmatrix}. \tag{A.34}$$

The matrices are then expressed as two equations in two unknowns

$$\mathbf{N}_{11}\ \mathbf{X}_1 + \mathbf{N}_{12}\ \mathbf{X}_2 = \mathbf{T}_1 \tag{A.35}$$

and

$$\mathbf{N}_{21}\ \mathbf{X}_1 + \mathbf{N}_{22}\ \mathbf{X}_2 = \mathbf{T}_2. \tag{A.36}$$

Solving the second equation (A.36) for $\mathbf{X}_2$ yields

$$\mathbf{X}_2 = \mathbf{N}_{22}^{-1}\ [\ \mathbf{T}_2 - \mathbf{N}_{21}\ \mathbf{X}_1\ ]. \tag{A.37}$$

Then substituting (A.37) into the first equation (A.35) gives

$$\mathbf{N}_{11}\ \mathbf{X}_1 + \mathbf{N}_{12}\ \mathbf{N}_{22}^{-1}\ [\ \mathbf{T}_2 - \mathbf{N}_{21}\ \mathbf{X}_1\ ] = \mathbf{T}_1 . \qquad (A.38)$$

Collecting the terms in (A.38) produces

$$\mathbf{N}_{11}\ \mathbf{X}_1 - \mathbf{N}_{12}\ \mathbf{N}_{22}^{-1}\mathbf{N}_{21}\ \mathbf{X}_1 = \mathbf{T}_1 - \mathbf{N}_{12}\ \mathbf{N}_{22}^{-1}\mathbf{T}_2 \qquad (A.39)$$

or

$$[\ \mathbf{N}_{11} - \mathbf{N}_{12}\ \mathbf{N}_{22}^{-1}\mathbf{N}_{21}\ ]\ \mathbf{X}_1 = [\ \mathbf{T}_1 - \mathbf{N}_{12}\ \mathbf{N}_{22}^{-1}\mathbf{T}_2\ ]. \qquad (A.40)$$

The reduced normal equations can finally be seen as

$$\mathbf{X}_1 = [\ \mathbf{N}_{11} - \mathbf{N}_{12}\ \mathbf{N}_{22}^{-1}\mathbf{N}_{21}\ ]^{-1}[\ \mathbf{T}_1 - \mathbf{N}_{12}\ \mathbf{N}_{22}\ \ \mathbf{T}_2^{-1}] \qquad (A.41)$$

and

$$\mathbf{X}_2 = \mathbf{N}_{22}^{-1}\ [\ \mathbf{T}_2 - \mathbf{N}_{21}\ \mathbf{X}_1\ ]. \qquad (A.42)$$

In order to evaluate the bundle adjustment procedure and check the initial results of the computer program, it was necessary to write additional code which incorporated the reduced normal equations. Included in Appendix B is a listing of the subroutine Rednorm which was utilized as part of this research.

A.6 Lessons Learned

The following is a list of helpful hints and reminders that will be useful for students and photogrammetrists that wish to pursue the self-calibration procedure described in this thesis:

1. Record the f-stop for every image taken.
2. Note the focus of the camera lens with each image.
3. Record as much information about each exposure no matter how insignificant it may seem.
4. Measure every negative to determine its fiducials.
5. Measure every photograph and use the data in conjunction with the fiducials determined from the comparator.
6. Pay attention to the affects made by weighting each of the object space coordinates.

APPENDIX B

PROGRAM LISTINGS

B.1 Introduction

Within Appendix B is a listing of the source code, data, and test runs associated with the self-calibration bundle adjustment. Section B.2 contains the source code necessary to perform a self-adjustment routine with the existing Aerotriangulation software. A register of Rednorm and Digsetup is also included. Section B.3 contains sample runs from the Quattro and Nikon data with corresponding input data and output generated from the Bundle adjustment program.

B.2 Source Code Listings

The source code that directly pertains to the self-calibration subroutines is included within this section. The routines have been placed in alphabetical order and are accompanied by an index. The Bundle program provides the capability to print out the normal equation submatrices, correction matrices, and intermediate calculations. Adding or deleting the appropriate comment statements from the desired lines of code will permit the programmer to edit the file to his specifications.

Source Code Index

AEROBARRY.COM

```
$ SET NOVERIFY
$ SET CONTROL=Y
$ ON CONTROL_Y THEN GOTO BEGIN
$ SET NOON
$! DISK1 :== HFR_PROD_DISK
$! SOFTDIR :== DOT.PROD.SOAP.NEW_ONE.SOURCE
$! DISK2 :== 'DISK1'
$! DATADIR :== 'SOFTDIR'
$ DISK1 :== USER1
$ SOFTDIR :== LONG
$ DISK2 :== USER1
$ DATADIR :== LONG

$ ASSIGN TT: FOR005
$ ASSIGN TT: FOR006
$ ASSIGN 'DISK1':['SOFTDIR']INIT.MNU FOR011
$ ASSIGN 'DISK1':['DATADIR']CAMRA.CAL FOR016
$ BELL[0,32]= %X07
$ ANSWR = "NULL"

$ TOP:
$ IF (ANSWR.EQS. "LOOP") THEN GOTO CLOSER
$ GOTO TITLE
$ CLOSER:
$    DEASSIGN FOR010
$    DEASSIGN FOR014
$    DEASSIGN FOR015
$    DEASSIGN FOR017
$    DEASSIGN FOR018
$    DEASSIGN FOR019
$    DEASSIGN FOR021
$    DEASSIGN FOR022
$    DEASSIGN FOR023

$ TITLE:
$ TYPE SYS$INPUT:


   AEROTRIANGULATION DATA PROCESSING AND ADJUSTMENT SYSTEM


              VERSION 3.0

              SEPTEMBER, 1989


              PROGRAMMED BY DR. STEVEN D. JOHNSON
                           (C) ALL RIGHTS RESERVED
```

```
              (ASSISTANT PROGRAMMER STEPHEN ROOT)

$ BEGIN:
$ TYPE SYS$INPUT:

     ENTER ONE OF THE FOLLOWING:
              file name   = PROJECT NAME USED FOR STRIP FILES
                      C   = CREATE FILE & INITIALIZE HEADER
                      R   = RETURN TO INPUT FILE NAME AGAIN
                      D   = DIRECTORY OF CURRENT FILE NAMES
                      P   = PURGE A PROJECT NAME AND FILES
                      END = END SESSION AND EXIT SYSTEM
$    INQUIRE STRIP "ENTER CHOICE"
$        IF (STRIP.EQS."END") THEN GOTO OUT1
$        IF (STRIP.EQS.."")    THEN GOTO BEGIN
$        IF (STRIP.EQS."C")   THEN GOTO MAKEPRJ
$        IF (STRIP.EQS."R")   THEN GOTO SRTOVER
$        IF (STRIP.EQS."D")   THEN GOTO LISTEM
$        IF (STRIP.EQS."P")   THEN GOTO KILLIT
$    FILELOC := 'DISK2':['DATADIR']
$    FILE = FILELOC + STRIP + ".DAT"
$    CHK  = F$SEARCH(FILE)
$    IF (CHK.NES."") THEN GOTO START
$    TYPE SYS$INPUT:

                THE FILE NAME WAS NOT FOUND ON DISK

$    GOTO BEGIN

$ MAKEPRJ:
$ TYPE SYS$INPUT:


 * * MAKE A NEW PROJECT NAME AND INITIALIZE FILES * *



     ENTER ONE OF THE FOLLOWING:
              file name   = NEW PROJECT NAME USED FOR STRIP FILES
                            (up to 8 characters)

                      R   = RETURN TO INPUT FILE NAME
                      D   = DIRECTORY OF CURRENT FILE NAMES
                      END = END SESSION AND EXIT SYSTEM
$    INQUIRE STRIP "ENTER CHOICE"
$        IF (STRIP.EQS."END") THEN GOTO OUT1
$        IF (STRIP.EQS.."")    THEN GOTO MAKEPRJ
$        IF (STRIP.EQS."R")   THEN GOTO SRTOVER
$        IF (STRIP.EQS."D")   THEN GOTO LISTEM
$    FILELOC := 'DISK2':['DATADIR']
```

```
$    FILE = FILELOC + STRIP + ".DAT"
$    CHK  = F$SEARCH(FILE)
$    IF (CHK.EQS."") THEN GOTO CONTIN2
$    TYPE SYS$INPUT:


     THE FILE NAME ALREADY EXITS, CHOOSE A DIFFERENT NAME

$    GOTO MAKEPRJ

$ CONTIN2:
$    ASSIGN 'DISK2':['DATADIR']'STRIP'.DAT FOR021
$    RUN 'DISK1':['SOFTDIR']MAKEFILE
$    DEASSIGN FOR021
$    GOTO START

$ SRTOVER:
$    GOTO TITLE

$ LISTEM:
$    DIR 'DISK2':['DATADIR']*.DAT
$    GOTO BEGIN

$ KILLIT:
$ TYPE SYS$INPUT:


 * * PURGE AN EXISTING PROJECT NAME AND FILE FROM THE DISK * *



     ENTER ONE OF THE FOLLOWING:
              file name   = PROJECT NAME TO BE PURGED
                      R   = RETURN TO INPUT FILE NAME
                      D   = DIRECTORY OF CURRENT FILE NAMES
                      END = END SESSION AND EXIT SYSTEM
$    INQUIRE STRIP "ENTER CHOICE"
$        IF (STRIP.EQS."END") THEN GOTO OUT1
$        IF (STRIP.EQS."")    THEN GOTO KILLIT
$        IF (STRIP.EQS."R")   THEN GOTO SRTOVER
$        IF (STRIP.EQS."D")   THEN GOTO LISTEM
$    FILELOC := 'DISK2':['DATADIR']
$    FILE = FILELOC + STRIP + ".DAT"
$    CHK  = F$SEARCH(FILE)
$    IF (CHK.NES."") THEN GOTO CONTIN3
$    TYPE SYS$INPUT:

     THE FILE NAME DOES NOT EXIT, CHECK INPUT NAME

$    GOTO KILLIT
```

```
$ CONTIN3:
$    DELETE 'DISK2':['DATADIR']'STRIP'.REF;*
$    DELETE 'DISK2':['DATADIR']'STRIP'.REL;*
$    DELETE 'DISK2':['DATADIR']'STRIP'.STP;*
$    DELETE 'DISK2':['DATADIR']'STRIP'.UNA;*
$    GOTO TITLE

$ START:
$    ASSIGN 'DISK2':['DATADIR']'STRIP'.MAP FOR010
$    ASSIGN 'DISK2':['DATADIR']'STRIP'.REF FOR014
$    ASSIGN 'DISK2':['DATADIR']'STRIP'.STP FOR015
$    ASSIGN 'DISK2':['DATADIR']'STRIP'.PLY FOR017
$    ASSIGN 'DISK2':['DATADIR']'STRIP'.REL FOR018
$    ASSIGN 'DISK2':['DATADIR']'STRIP'.DAT FOR021
$    ASSIGN 'DISK2':['DATADIR']'STRIP'.UNA FOR022
$    ASSIGN 'DISK2':['DATADIR']'STRIP'.ADJ FOR023
$ START1:
$ TYPE SYS$INPUT:


   AEROTRIANGULATION DATA PROCESSING AND ADJUSTMENT SYSTEM


$    RUN 'DISK1':['SOFTDIR']DISPLAY
$    TYPE SYS$INPUT:

                * * * *   MAIN MENU   * * * * * * * * * * * * *

                  1 -  MEASURE PHOTO ON MONOCOMPARATOR
                  2 -  READ GROUND COORD. FROM FILE
                  3 -  PERFORM MODEL TIES AND STRIP FORMATION
                  4 -  PERFORM POLYNOMIAL STRIP ADJUSTMENT

                  5 -  REMEASURE PHOTO IN STRIP
                  6 -  EDIT PHOTO COORD. IN PROJECT FILE
                  7 -  READ PHOTO COORD. FROM FILE
                  8 -  INSERT PHOTO ORIENT. DATA RECORDS

                  9 -  PERFORM BUNDLE ADJUSTMENT
                 10 -  CONVERT STRIP HEADER TO OLD FORMAT
                 11 -  UTILITY
                 12 -  GENERATE PRINT FILES
                END -  END SESSION AND EXIT SYSTEM
               LOOP -  RETURN TO ENTER NEW PROJECT NAME

$    INQUIRE ANSWR "ENTER CHOICE"
$        IF (ANSWR.EQS."1") THEN GOTO MEASURE
$        IF (ANSWR.EQS."2") THEN GOTO GRNDCORD
$        IF (ANSWR.EQS."3") THEN GOTO ASSEMBLE
$        IF (ANSWR.EQS."4") THEN GOTO POLYSTRP
```

```
$        IF (ANSWR.EQS."5") THEN GOTO MEASADD
$        IF (ANSWR.EQS."7") THEN GOTO FILERD
$        IF (ANSWR.EQS."8") THEN GOTO INDATAOR
$        IF (ANSWR.EQS."9") THEN GOTO BUNDLE
$        IF (ANSWR.EQS."10") THEN GOTO CONVRT
$        IF (ANSWR.EQS."11") THEN GOTO UTILITY
$        IF (ANSWR.EQS."12") THEN GOTO PRINTOUT
$        IF (ANSWR.EQS."END") THEN GOTO ENDIT
$        IF (ANSWR.EQS."LOOP") THEN GOTO TOP
$    GOTO START1

$ MEASURE:
$    ALLOCATE TXB7
$    ASSIGN TXB7: FOR008
$    RUN 'DISK1':['SOFTDIR']STRIPIN
$    DEASSIGN FOR008
$    GOTO START1

$ FILERD:
$ INQUIRE INFILE "ENTER NAME OF INPUT STRIP FILE (ENTER 'END' TO STOP)"
$ IF (INFILE.EQS."END") THEN GOTO ENDIT
$ IF (INFILE.EQS."") THEN GOTO FILERD
$ FILELOC := 'DISK2':['DATADIR']
$ FILE = FILELOC + INFILE + ".DIG"
$ CHK  = F$SEARCH(FILE)
$ IF (CHK.EQS."") THEN GOTO FILERD
$    ASSIGN 'DISK2':['DATADIR']'INFILE'.DIG FOR009
$    RUN 'DISK1':['SOFTDIR']FILESTRP
$    DEASSIGN FOR009
$    GOTO START1

$ MEASADD:
$    ALLOCATE TXB7
$    ASSIGN TXB7: FOR008
$    RUN 'DISK1':['SOFTDIR']STRIPADD
$    DEASSIGN FOR008
$    GOTO START1

$ GRNDCORD:
$ TYPE SYS$INPUT:
```

GROUND COORDINATE SUBMENU

```
     CHOOSE ONE OF THE FOLLOWING:
        1    = ASSIGN .CTL GROUND CONTROL FILE NAME TO USE
        2    = READ INPUT .GCP FILE AND CREATE .CTL GROUND CONTROL FILE

        3    = READ .CTL GROUND CONTOL FILE AND INPUT DIRECTLY TO .ADJ
FILE
               AS INTIAL APPROXIMATIONS IN BUNDLE PROGRAM

        D    = DIRECTORY OF CURRENT FILE NAMES
        BACK = RETURN TO MAIN MENU



$    INQUIRE ANSWR "ENTER CHOICE"
$        IF (ANSWR.EQS."1") THEN GOTO GETCTRL
$        IF (ANSWR.EQS."2") THEN GOTO READCTRL
$        IF (ANSWR.EQS."3") THEN GOTO INDATAGP
$        IF (ANSWR.EQS."D") THEN GOTO LISTCTRL
$        IF (ANSWR.EQS."BACK") THEN GOTO START
$        GOTO GRNDCORD

$ GETCTRL:
$ INQUIRE GROUND "ENTER NAME (UP TO 8 CHAR.) OF CONTROL FILE"
$ IF (STRIP.EQS."END") THEN GOTO ENDIT
$ IF (STRIP.EQS."") THEN GOTO GRNDCORD
$ ASSIGN 'DISK2':['DATADIR']'GROUND'.CTL FOR019
$ FILELOC := 'DISK2':['DATADIR']
$ FILE = FILELOC + GROUND + ".CTL"
$ CHK  = F$SEARCH(FILE)
$ IF (CHK.EQS."") THEN GOTO GETCTRL
$    GOTO START1

$ READCTRL:
$ INQUIRE GRNDPTS "ENTER NAME (UP TO 8 CHAR.) OF INPUT GROUND PT. FILE"
$ IF (STRIP.EQS."END") THEN GOTO ENDIT
$ IF (STRIP.EQS."") THEN GOTO READCTRL
$ ASSIGN 'DISK2':['DATADIR']'GRNDPTS'.GCP FOR008
$ FILELOC := 'DISK2':['DATADIR']
$ FILE = FILELOC + GRNDPTS + ".GCP"
$ CHK  = F$SEARCH(FILE)
$ IF (CHK.EQS."") THEN GOTO READCTRL
$ INQUIRE GROUND "ENTER NAME (UP TO 8 CHAR.) OF CONTROL FILE"
$ IF (STRIP.EQS."END") THEN GOTO ENDIT
$ IF (STRIP.EQS."") THEN GOTO GRNDCORD
$ ASSIGN 'DISK2':['DATADIR']'GROUND'.CTL FOR019
$ ASSIGN 'DISK1':['SOFTDIR']CONTROL.MNU FOR012
$ RUN GCTRL
$ DEASSIGN FOR008
$ DEASSIGN FOR012
```

```
$    GOTO START1

$ INDATAGP:
$ INQUIRE GROUND "ENTER NAME (UP TO 8 CHAR.) OF CONTROL FILE"
$ IF (STRIP.EQS."END") THEN GOTO ENDIT
$ IF (STRIP.EQS."") THEN GOTO GRNDCORD
$ ASSIGN 'DISK2':['DATADIR']'GROUND'.CTL FOR019
$ FILELOC := 'DISK2':['DATADIR']
$ FILE = FILELOC + GROUND + ".CTL"
$ CHK  = F$SEARCH(FILE)
$ IF (CHK.EQS."") THEN GOTO INDATAGP
$    RUN 'DISK1':['SOFTDIR']INDATAGP
$    DEASSIGN FOR019
$    GOTO START1

$ LISTCTRL:
$    DIR 'DISK2':['DATADIR']*.GCP
$    DIR 'DISK2':['DATADIR']*.CTL
$    INQUIRE ANSWR "Y = GO TO GROUND COORD MENU;  N = GOTO MAIN MENU"

$        IF (ANSWR.EQS."Y") THEN GOTO GRNDCORD
$        IF (ANSWR.EQS."N") THEN GOTO START1
$    GOTO LISTCTRL

$ ASSEMBLE:
$    RUN 'DISK1':['SOFTDIR']ASSEMBLY
$    GOTO START1

$ POLYSTRP:
$    ASSIGN 'DISK1':['SOFTDIR']POLY.MNU FOR013
$    RUN 'DISK1':['SOFTDIR']POLYADJ
$    DEASSIGN FOR013
$    GOTO START1

$ INDATAOR:
$    ASSIGN 'DISK2':['DATADIR']'STRIP'.POR FOR020
$    RUN 'DISK1':['SOFTDIR']INDATAOR
$    DEASSIGN FOR020
$    GOTO START1

$ BUNDLE:
$ TYPE SYS$INPUT:

     NOT YET ACTIVE HERE

     EXIT STRIP AEROTRIANGULATION AND ENTER @BUNDLE

$    GOTO START1

$ CONVRT:
```

```
$    RENAME 'DISK2':['DATADIR']'STRIP'.DAT
'DISK2':['DATADIR']'STRIP'.ORG
$    DEASSIGN FOR021
$    ASSIGN 'DISK2':['DATADIR']'STRIP'.ORG FOR021
$    ASSIGN 'DISK2':['DATADIR']'STRIP'.DAT FOR031
$    RUN 'DISK1':['SOFTDIR']NEW_OLD
$    DEASSIGN FOR031
$    GOTO START1

$ UTILITY:
$    RUN UTILITY
$    GOTO START1

$ PRINTOUT:
$ TYPE SYS$INPUT:

     NOT YET ACTIVE HERE


$    GOTO START1

$ ENDIT:
$    DEASSIGN FOR010
$    DEASSIGN FOR014
$    DEASSIGN FOR015
$    DEASSIGN FOR017
$    DEASSIGN FOR018
$    DEASSIGN FOR019
$    DEASSIGN FOR021
$    DEASSIGN FOR022
$    DEASSIGN FOR023
$ OUT1:
$    DEASSIGN FOR005
$    DEASSIGN FOR006
$    DEASSIGN FOR011
$    DEASSIGN FOR016

$    SET DEF 'DISK2':['DATADIR']
$ EXIT
```

```
C*********************************************************************
C
C                B U N D L E     A D J U S T M E N T
C
C    [ADJUSTMENT BY INVERSING THE ENTIRE NORMAL MATRIX AT ONE TIME]
C
C          [THIS ADJUSTMENT MAKES USE OF ADDITIONAL PARAMETERS]
C
C                     ANALYTICAL AEROTRIANGULATION
C
C   SIMULTANEOUS COLLINEARITY ADJUSTMENT OF PHOTOGRAPHIC IMAGE RAYS
C
C        VARIABLES -
C
C             JGPTS  -  NUMBER OF GROUND POINTS PER STRIP
C             JPTP   -  NUMBER OF IMAGE POINTS PER PHOTO
C             JPHS   -  NUMBER OF PHOTOS PER STRIP
C             JPHB   -  NUMBER OF PHOTOS PER BLOCK (JPHS * NO. OF
C                       STRIPS)
C             NAPS   -  NUMBER OF ADDITIONAL PARAMETERS USED
C
C
C        FILE DEFINITIONS -
C
C           UNIT 15 - BUNDLE INPUT DATA FILE (SEQ)
C           UNIT 16 - BUNDLE OUTPUT FILE (SEQ)
C           UNIT 30 - JOB DIRECTORY (DA)  -  ICAT
C           UNIT 31 - PHOTOCOR - PHOTO IMAGE COORDINATES (DA) -  IPHOT
C           UNIT 32 - AJUSTCOR - ADJUSTED STRIP COORDINATES (DA) -
C                     IADJ
C           UNIT 33 - NORMAL EQUATIONS (DA) - IREC
C           UNIT 40 - TRIAL OUTPUT FILE
C
C        NOTE: FOR UNIT 33 -  RECL = 2 * ((JPHS * 6) + 1)
C                             BLOCKSIZE = 4 * RECL
C
C*********************************************************************

      IMPLICIT REAL*8 (A-H,O-Z)

      DIMENSION JOB(20), NPHOTO(20)
      DIMENSION XP(90), YP(90), XS(1500), YS(1500), ZS(1500)
      DIMENSION B(2,6),  C(2,3),  D(2,18),  E(2), R(3600), S(6,6)
      DIMENSION WB(2,6), WC(2,3), WD(2,18), WE(2)
      DIMENSION BTB(6,6),  BTC(6,3),  BTD(6,18),  BTE(6)
      DIMENSION CTB(3,6),  CTC(3,3),  CTD(3,18),  CTE(3)
      DIMENSION DTB(18,6), DTC(18,3), DTD(18,18), DTE(18)
      DIMENSION EN(660,660), ET(660), EX(660)
      DIMENSION WCN11(6),  WCT1(6),   WCN22(3),   WCT2(3)
      DIMENSION WCN33(18), WCT3(18)
```

```
      DIMENSION ORIENT(6,250), PLTSET(6), FXY(4)
      DIMENSION ISEQP(250), ISEQG(1500), LOADER(1500,10)

      REAL*8 K1, K2, K3

      REAL*4 WX(90), WY(90), WTX(1500), WTY(1500), WTZ(1500)
      REAL*4 WTOPK, WTXYC, WTPPO, WTDFL, WTAPS
      REAL*4 EPSLNP(250,6), EPSLNG(1500,3), EPSLNA(18)
      REAL*4 SIG(6,250), WR, WS, WQ

      CHARACTER*4 HEDR(20), SEQP(250), MODE, FOTO, SFOTO, STRP
      CHARACTER*4 NS(1500), NP(90), NM, NAME

      CHARACTER NORMAL*(*)
      PARAMETER (NORMAL = 'NORM')

      INTEGER*2 ADFOTO(90), ADGRND(90), NSAVE(10), LIST(250)
      INTEGER G, H, TR

      COMMON /BLK13/IREC
      COMMON /CB1/XP/CB2/YP/CB3/XS/CB4/YS/CB5/ZS
      COMMON /CB6/ADFOTO/CB7/ADGRND

      OPEN (UNIT=15,
     &      FORM='FORMATTED',
     &      ORGANIZATION='SEQUENTIAL',
     &      RECORDSIZE=80,
     &      STATUS='UNKNOWN',
     &      RECORDTYPE='VARIABLE')

      OPEN (UNIT=16,
     &      FORM='FORMATTED',
     &      ORGANIZATION='SEQUENTIAL',
     &      RECORDSIZE=132,
     &      STATUS='UNKNOWN',
     &      RECORDTYPE='VARIABLE')

      OPEN (UNIT=17,
     &      FORM='FORMATTED',
     &      ORGANIZATION='SEQUENTIAL',
     &      RECORDSIZE=80,
     &      STATUS='UNKNOWN',
     &      RECORDTYPE='VARIABLE')

      OPEN (UNIT=30,
     &      ACCESS='DIRECT',
     &      FORM='UNFORMATTED',
     &      RECL=33,
     &      BLOCKSIZE=132,
     &      STATUS='UNKNOWN',
```

```
     &      RECORDTYPE='FIXED',
     &      ASSOCIATEVARIABLE=ICAT)

      OPEN (UNIT=31,
     &      ACCESS='DIRECT',
     &      FORM='UNFORMATTED',
     &      RECL=10,
     &      BLOCKSIZE=40,
     &      STATUS='UNKNOWN',
     &      RECORDTYPE='FIXED',
     &      ASSOCIATEVARIABLE=IPHOT)

      OPEN (UNIT=32,
     &      ACCESS='DIRECT',
     &      FORM='UNFORMATTED',
     &      RECL=10,
     &      BLOCKSIZE=40,
     &      STATUS='UNKNOWN',
     &      RECORDTYPE='FIXED',
     &      ASSOCIATEVARIABLE=IADJ)

      OPEN (UNIT=33,
     &      ACCESS='DIRECT',
     &      FORM='UNFORMATTED',
     &      RECL=362,
     &      BLOCKSIZE=1448,
     &      STATUS='UNKNOWN',
     &      RECORDTYPE='FIXED',
     &      INITIALSIZE=12,
     &      ASSOCIATEVARIABLE=IREC)

      OPEN (UNIT=40,
     &      FORM='FORMATTED',
     &      ORGANIZATION='SEQUENTIAL',
     &      RECORDSIZE=80,
     &      STATUS='UNKNOWN',
     &      RECORDTYPE='VARIABLE')

      JGPTS = 1500
      JPTP = 90
      JPHS = 30
      JPHB = 600
      IFLG = 0
      NAPS = 3

C     ----------------------------------------------------------------

      WRITE(6,900)
  900 FORMAT(//,5X,'BUNDLE ADJUSTMENT EXECUTION HAS BEGUN...',//)
```

```
      CALL MZEROI (LOADER,JGPTS*10)
      CALL MZEROR (EPSLNP,JPHB*6)
      CALL MZEROR (EPSLNG,JGPTS*3)
      G = 15
      H = 16
      NPLATE = 0
      ISTEP = 0
      KOUNT = 0
      ITER = 0
      IERR = 0
      MFLAG=0

C  ****************  DATA PREPARATION  ******************************

C        READ JOBS TO BE INCLUDED IN THIS RUN AND RUN PARAMETERS

      READ (G,1000) JOBCNT,WTOPK,WTXYC,SCALE,TEST
      READ (G,1003) IPRNT,IPNCH,IPLOT,IGRPT,ISTOP

      DO 4 I=1,JOBCNT
      JOB(I) = I
    4 CONTINUE

C        SET DEFAULT PARAMETERS
      IF (WTOPK .LT. 1.0E-5) WTOPK=10.0
      IF (WTXYC .LT. 0.0001) WTXYC=100.0
      IF (SCALE .LE. 0.001) SCALE = 11.8110236
      IF (TEST .LE. 0.001) TEST = 0.125
      IF (ISTOP .LE. 0) ISTOP=4


C  PRINT JOBS INCLUDED IN THIS RUN

      WRITE (H,3004)
      DO 10 I=1,JOBCNT
      ICAT = JOB(I)
      READ (30,REC=ICAT) JOBR,(HEDR(J), J=1,20),NPHOTO(I),KSE
      WRITE (H,3005) JOBR,(HEDR(J), J=1,20)
      WRITE (H,3055)
   10 WRITE (H,3056) NPHOTO(I),KSE
      WRITE (H,3003) WTOPK,WTXYC

C  READ PHOTO SEQUENCE FOR SETTING UP NORMAL EQUATIONS

      READ (G,1001) MODE,NPLATE

C     TEST FOR SEQUENCING OPTION -  MODE = "NORMAL"    (AUTOMATIC)
C                                   MODE = "SEQUENCE"  (ASSIGNED)
      IF (MODE .EQ. NORMAL) GO TO 15
```

```
C        READ ASSIGNED PHOTO SEQUENCE
      READ (G,1002) (SEQP(I), I=1,NPLATE)

C        USE PHOTOS IN ORDER OF OCCURENCE
   15 CONTINUE

C  ******* BEGIN PROCESSING EACH JOB FROM DISC FILES ************

      PRINT *, ' ************************************'
      PRINT *, '   BEGIN PROCESSING STRIPS'
      PRINT *, ' ************************************'
      PRINT *, '    '
      DO 40 IJ = 1,JOBCNT

C  GET JOB PARAMETERS FROM JOB DIRECTORY ON DISC FILE

      PRINT *, ' JOB: ',IJ
      ICAT = JOB(IJ)
      READ (30,REC=ICAT) JOBR,(HEDR(I),I=1,20),L,KSE
      PRINT *, (HEDR(I),I=1,20)
      PRINT *, '     '

C  GET GROUND COORDINATE VALUES FROM DISC FILE

      PRINT *, '     '
      PRINT *, '   BEGIN STRIP GROUND POINTS'
      PRINT *, '    '
      IADJ = (JOB(IJ)-1)*JGPTS + 1
      IF (IJ .GT. 1) GO TO 28

C        IF FIRST JOB, LOAD DIRECTLY TO GROUND COORD. LIST
C        NUMG = NUMBER OF GROUND POINTS IN RUN

      NUMG = KSE

      DO 25 I=1,NUMG
      ISEQG(I) = 0
      READ (32,REC=IADJ) NS(I),XS(I),YS(I),ZS(I),WTX(I),WTY(I),WTZ(I)
      PRINT *, ' READING FIRST STRIP GROUND PT ',NS(I),I
   25 CONTINUE
      GO TO 40

C        IF NOT FIRST JOB, LOAD ONLY NEW POINTS TO GROUND COORD. LIST
   28 L = NUMG
      DO 35 I=1,KSE
      READ (32,REC=IADJ) NM,X,Y,Z,WR,WS,WQ
C        CHECK FOR TIE POINT
      DO 31 J=1,NUMG
      IF (NS(J) .EQ. NM) GO TO 33
   31 CONTINUE
```

```
C        NOT A TIE POINT - ADD TO LIST
      L = L + 1
C        CHECK FOR MAXIMUM NUMBER OF POINTS
      IF (L .LE. JGPTS) GO TO 32
      IERR = 1
      GO TO 35
   32 NS(L) = NM
      XS(L) = X
      YS(L) = Y
      ZS(L) = Z
      WTX(L) = WR
      WTY(L) = WS
      WTZ(L) = WQ
      ISEQG(L) = 0
      PRINT *, ' ADDING NEXT STRIP GROUND PT ',NS(L),L
      GO TO 35
C        TIE POINT FOUND - USE AVERAGE VALUES
   33 XS(J) = (XS(J)+X) / 2.0
      YS(J) = (YS(J)+Y) / 2.0
      ZS(J) = (ZS(J)+Z) / 2.0
      PRINT *, ' AVERAGING TIE STRIP GROUND PT ',NS(J),J
   35 CONTINUE
      NUMG = L

C
   40 CONTINUE

C        TRANSLATE ORIGIN TO CENTER OF GROUND COORDINATES
      XGTR = 0.0
      YGTR = 0.0
      ZGTR = 0.0
      DO 41 I=1,NUMG
      XGTR = XGTR + XS(I)
      YGTR = YGTR + YS(I)
   41 ZGTR = ZGTR + ZS(I)
      XGTR = XGTR/NUMG
      YGTR = YGTR/NUMG
      ZGTR = ZGTR/NUMG
      DO 42 I=1,NUMG
      XS(I) = XS(I) - XGTR
      YS(I) = YS(I) - YGTR
      ZS(I) = ZS(I) - ZGTR
   42 CONTINUE

C  *****************  END JOB PROCESSING LOOP  *******************


C  ******* BEGIN PROCESSING EACH PHOTO IN JOB FROM DISC FILE *****
```

```
      PRINT *, ' ************************************'
      PRINT *, '   BEGIN PROCESSING PHOTOS IN STRIPS'
      PRINT *, ' ************************************'
      PRINT *, '    '
      IF (MODE .EQ. NORMAL) WRITE (H,3022)
      IF (MODE .NE. NORMAL) WRITE (H,3023)
      KSE = 0
   45 DO 100 IJ = 1,JOBCNT
      KOUNT = NPHOTO(IJ)
      NPHOTO(IJ)=0
      PRINT *, ' READ PHOTOS IN JOB ',IJ
      PRINT *, '  '

      DO 100 IP=1,KOUNT

C  GET PHOTO IDENTIFICATION FROM DISC FILE AND PUT IN SEQUENCE
      IPHOT = (JOB(IJ)-1)*(JPTP*JPHS) + 1 + (IP-1)*JPTP
      READ (31,REC=IPHOT) N,STRP,FOTO,F
      PRINT *, '  '
      PRINT *,'    STRIP ID ',STRP,'    PHOTO ID ',FOTO

C        CHECK FOR ASSIGNED OR AUTOMATIC SEQUENCING MODE
      IF (MODE .EQ. NORMAL) GO TO 49
      DO 47 K=1,NPLATE
      IF (FOTO .EQ. SEQP(K)) GO TO 48
   47 CONTINUE
      K = 0
      WRITE (H,3021) STRP,FOTO,K
      GO TO 100
   48 ISTEP = K
      GO TO 51
   49 ISTEP = ISTEP + 1
      NPLATE = ISTEP
C        CHECK FOR MAXIMUM NUMBER OF PHOTOS
      IF(NPLATE .LE. JPHB) GO TO 52
      IERR = 1
      GO TO 105
   52 SEQP(ISTEP) = FOTO
   51 ISEQP(ISTEP) = IPHOT - 1
C     SAVE LIST OF PHOTO ID'S IN STRIP ORDER FOR FLIGHT PROCESSING
      KSE = KSE + 1
      LIST(KSE) = ISTEP
      NPHOTO(IJ) = NPHOTO(IJ) + 1
   50 CONTINUE

C  GET IMAGE COORDINATES FROM DISC FILE AND FIND GROUND ARRAY
C  ADDRESSES.
      DO 60 I=1,N
      READ(31,REC=IPHOT) K,STRP,FOTO,NP(I),XP(I),YP(I),WX(I),WY(I)
   60 CONTINUE
```

```
C  FIND CONJUGATE ADDRESSES.
      CALL ADRSORT (N,NP,NUMG,NS,ADFOTO,ADGRND,K)

C  CHECK FOR RESECTION OUTPUT FLAG.
      IF (ISTOP .GT. 10) THEN

C  CALCULATE PHOTO ORIENTATION AND OUTPUT TO FILE 40. (SINGLE PHOTO
C  RESECTION).
      CALL RESECT (F,K,ORIENT(1,ISTEP),ORIENT(2,ISTEP),
     &     ORIENT(3,ISTEP),ORIENT(4,ISTEP),ORIENT(5,ISTEP),
     &     ORIENT(6,ISTEP))
      PRINT *, '    RESECTED PHOTO ORIENTATION:  FOCAL LENGTH =',F
      PRINT *, ' OMEGA =',ORIENT(1,ISTEP),'  XC =',ORIENT(4,ISTEP)
      PRINT *, ' PHI   =',ORIENT(2,ISTEP),'  YC =',ORIENT(5,ISTEP)
      PRINT *, ' KAPPA =',ORIENT(3,ISTEP),'  ZC =',ORIENT(6,ISTEP)
      PRINT *, '   '
      SIG(1,ISTEP) = WTOPK
      SIG(2,ISTEP) = WTOPK
      SIG(3,ISTEP) = WTOPK
      SIG(4,ISTEP) = WTXYC
      SIG(5,ISTEP) = WTXYC
      SIG(6,ISTEP) = WTXYC
      ORIENT(4,ISTEP) = ORIENT(4,ISTEP) + XGTR
      ORIENT(5,ISTEP) = ORIENT(5,ISTEP) + YGTR
      ORIENT(6,ISTEP) = ORIENT(6,ISTEP) + ZGTR

      WRITE (40,5000) FOTO
      WRITE (40,5001) (SIG(I,ISTEP), I=1,6)
      WRITE (40,5002) (ORIENT(I,ISTEP), I=1,3)
      WRITE (40,5002) (ORIENT(I,ISTEP), I=4,6)

 5000 FORMAT (A4)
 5001 FORMAT (6F10.5)
 5002 FORMAT (3F15.5)
      GO TO 100

      ENDIF

C  CHECK PHOTO ORIENTATION FOR VALID ORIENTATION.
      IPHOT = (JOB(IJ)-1)*(JPTP*JPHS) + 1 + (IP)*JPTP - 2
      READ (31,REC=IPHOT) STRP,FOTO,IFLG

      IF (IFLG .EQ. 5) THEN

C  RETREIVE PHOTO ORIENTATION RECORDS.
      IPHOT = (JOB(IJ)-1)*(JPTP*JPHS) + 1 + (IP)*JPTP - 3
      READ (31,REC=IPHOT) STRP,FOTO,IFLG,
     &      SIG(1,ISTEP),SIG(2,ISTEP),SIG(3,ISTEP),
     &      SIG(4,ISTEP),SIG(5,ISTEP),SIG(6,ISTEP)
      READ (31,REC=IPHOT) STRP,FOTO,IFLG,
```

```
     &      ORIENT(1,ISTEP),ORIENT(2,ISTEP),ORIENT(3,ISTEP)
      READ (31,REC=IPHOT) STRP,FOTO,IFLG,
     &      ORIENT(4,ISTEP),ORIENT(5,ISTEP),ORIENT(6,ISTEP)
      ORIENT(4,ISTEP) = ORIENT(4,ISTEP) - XGTR
      ORIENT(5,ISTEP) = ORIENT(5,ISTEP) - YGTR
      ORIENT(6,ISTEP) = ORIENT(6,ISTEP) - ZGTR
      PRINT *, '   PHOTO ORIENTATION FROM FILE:  FOCAL LENGTH =',F
      PRINT *, ' OMEGA =',ORIENT(1,ISTEP),'  XC =',ORIENT(4,ISTEP)
      PRINT *, ' PHI   =',ORIENT(2,ISTEP),'  YC =',ORIENT(5,ISTEP)
      PRINT *, ' KAPPA =',ORIENT(3,ISTEP),'  ZC =',ORIENT(6,ISTEP)
      PRINT *, '   '

      ELSE

C  CALCULATE PHOTO ORIENTATION APPROX. (SINGLE PHOTO RESECTION).

      CALL RESECT (F,K,ORIENT(1,ISTEP),ORIENT(2,ISTEP),
     &     ORIENT(3,ISTEP),ORIENT(4,ISTEP),ORIENT(5,ISTEP),
     &     ORIENT(6,ISTEP))
      PRINT *, '    RESECTED PHOTO ORIENTATION:  FOCAL LENGTH =',F
      PRINT *, '          RESECTED PHOTO ORIENTATION:'
      PRINT *, ' OMEGA =',ORIENT(1,ISTEP),'  XC =',ORIENT(4,ISTEP)
      PRINT *, ' PHI   =',ORIENT(2,ISTEP),'  YC =',ORIENT(5,ISTEP)
      PRINT *, ' KAPPA =',ORIENT(3,ISTEP),'  ZC =',ORIENT(6,ISTEP)
      PRINT *, '   '
      SIG(1,ISTEP) = WTOPK
      SIG(2,ISTEP) = WTOPK
      SIG(3,ISTEP) = WTOPK
      SIG(4,ISTEP) = WTXYC
      SIG(5,ISTEP) = WTXYC
      SIG(6,ISTEP) = WTXYC

      ENDIF

C     COPY FOUND IMAGE POINTS BACK TO DISC WITH GROUND LIST ADDRESS

      IPHOT = ISEQP(ISTEP)
      WRITE(31,REC=IPHOT) K,STRP,FOTO,F
      DO 70 I=1,K
      J = ADFOTO(I)
      L = ADGRND(I)
      ISEQG(L) = ISEQG(L) + 1
      M = ISEQG(L)
      IF (M .LE. 10) GO TO 68
      IERR = 1
      WRITE(H,3002) NS(L)
      GO TO 70
   68 LOADER(L,M) = ISTEP*100 + I
      WRITE(31,REC=IPHOT) L,STRP,FOTO,NP(J),XP(J),YP(J),WX(J),WY(J)
   70 CONTINUE
```

```
      WRITE (H,3021) STRP,FOTO,K,(ORIENT(I,ISTEP),I=4,6)

  100 CONTINUE

      IF (ISTOP .GT. 10) STOP

C   * * * * * * * * * *  END PHOTO PROCESSING LOOP  * * * * * * * * * *

C     PRINT JOB SET-UP PARAMETERS AND CHECK ERROR FLAG

  105 WRITE(H,3006) NPLATE,NUMG
      IF (IERR .EQ. 0) GO TO 106
      WRITE(H,3007)
      STOP

C  * * * *  PROCESS LOADER TABLE TO ARRANGE DATA IN PROPER ORDER  * *

  106 K = 0

C        COMPRESS LOADER TABLE TO ELIMINATE GROUND POINTS NOT FOUND
C          ON PHOTOS
      DO 107 I=1,NUMG
      IF (ISEQG(I) .LE. 1) GO TO 107
      K = K + 1
      NS(K) = NS(I)
      XS(K) = XS(I)
      YS(K) = YS(I)
      ZS(K) = ZS(I)
      WTX(K) = WTX(I)
      WTY(K) = WTY(I)
      WTZ(K) = WTZ(I)
      ISEQG(K) = ISEQG(I)
      DO 107 J=1,10
        LOADER(K,J) = LOADER(I,J)
  107 CONTINUE
      NUMG = K

      IF (MODE .EQ. NORMAL) GO TO 340

C        ORDER LOADER TABLE SO NORMAL EQUATIONS WILL BE WRITTEN IN
C           PHOTO SEQUENCE
C        PUT ROWS INTO ASCENDING ORDER
      DO 315 I=1,NUMG
      IJ = ISEQG(I)
      DO 315 J=2,IJ
      IF (LOADER(I,J) .GE. LOADER(I,J-1)) GO TO 315
      K = J - 1
      NSAVE(1) = LOADER(I,J)
      LOADER(I,J) = LOADER(I,K)
  305 IF (K .EQ. 1) GO TO 310
```

```
      IF (NSAVE(1) .GE. LOADER(I,K-1)) GO TO 310
      LOADER(I,K) = LOADER(I,K-1)
      K = K - 1
      GO TO 305
  310 LOADER(I,K) = NSAVE(1)
  315 CONTINUE
C        PUT FIRST COLUMN IN ASCENDING ORDER AND SWITCH OTHER COLUMNS
C        ACCORDINGLY
      DO 330 J=2,NUMG
      IF (LOADER(J,1) .GE. LOADER(J-1,1)) GO TO 330
      I = J - 1
      DO 318 K=1,10
  318 NSAVE(K) = LOADER(J,K)
      NM = NS(J)
      X = XS(J)
      Y = YS(J)
      Z = ZS(J)
      WR = WTX(J)
      WS = WTY(J)
      WQ = WTZ(J)
      L = ISEQG(J)
      DO 319 K=1,10
  319 LOADER(J,K) = LOADER(I,K)
      NS(J) = NS(I)
      XS(J) = XS(I)
      YS(J) = YS(I)
      ZS(J) = ZS(I)
      WTX(J) = WTX(I)
      WTY(J) = WTY(I)
      WTZ(J) = WTZ(I)
      ISEQG(J) = ISEQG(I)
  320 IF (I .EQ. 1) GO TO 325
      IF (NSAVE(1) .GE. LOADER(I-1,1)) GO TO 325
      DO 324 K=1,10
  324 LOADER(I,K) = LOADER(I-1,K)
      NS(I) = NS(I-1)
      XS(I) = XS(I-1)
      YS(I) = YS(I-1)
      ZS(I) = ZS(I-1)
      WTX(I) = WTX(I-1)
      WTY(I) = WTY(I-1)
      WTZ(I) = WTZ(I-1)
      ISEQG(I) = ISEQG(I-1)
      I = I - 1
      GO TO 320
  325 DO 326 K=1,10
  326 LOADER(I,K) = NSAVE(K)
      NS(I) = NM
      XS(I) = X
      YS(I) = Y
```

```
      ZS(I) = Z
      WTX(I) = WR
      WTY(I) = WS
      WTZ(I) = WQ
      ISEQG(I) = L
  330 CONTINUE
C  * * * * * * *  END PROCESSING OF LOADER TABLE  * * * * * * * * *

C        FIND BANDWIDTH
  340 IBAND = 0

      DO 345 I=1,NUMG
      K = ISEQG(I)
  345 IF(IBAND .LT. LOADER(I,K)/100 - LOADER(I,1)/100 + 1) IBAND =
     @LOADER(I,K)/100 - LOADER(I,1)/100 + 1
      WRITE (H,3008) IBAND
      PRINT *, ' ****************************************'
      PRINT *, '    BLOCK HAS BEEN SET UP'
      PRINT *, ' ****************************************'
      PRINT *, '    NUMBER OF PHOTOS        =',NPLATE
      PRINT *, '    NUMBER OF GROUND POINTS =',NUMG
      PRINT *, '    BANDWIDTH               =',IBAND
      PRINT *, '   '

C        CHECK BANDWIDTH
      IF (IBAND .LE. 30) GO TO 110
      WRITE (H,3007)
      STOP

C  * * * * * * * * * * * * * * * * * * * * * * * * * * * * * * * * * *
C  * * * * * * * * * * * * * * * * * * * * * * * * * * * * * * * * * *
C  * * * * *  BEGIN ITERATIVE SOLUTION OF SIMULTANEOUS EQUATIONS   * *
C  * * * * * * * * * * * * * * * * * * * * * * * * * * * * * * * * * *
C  * * * * * * * * * * * * * * * * * * * * * * * * * * * * * * * * * *

C  INITIAL APPROXIMATIONS FOR THE ADDITIONAL PARAMETERS.

  110 NAPS= NAPS
      XO  = 0D0
      YO  = 0D0
      DF  = 0D0
      K1  = 0D0
      K2  = 0D0
      K3  = 0D0
      P1  = 0D0
      P2  = 0D0
      A1  = 0D0
      A2  = 0D0
      A3  = 0D0
      A4  = 0D0
```

```
      B1  = 0D0
      B2  = 0D0
      B3  = 0D0
      B4  = 0D0
      B5  = 0D0
      B6  = 0D0

C  PRINT OUT INITIAL VALUES FOR FOCAL LENGTH AND PRINCIPAL POINT
C  OFFSET.

      WRITE(H,5010)F,XO,YO

C  WEIGHTS (STANDARD DEVIATIONS) ARE APPLIED TO PARAMETERS.
C  THE ONES LISTED UNDER CX ARE SOME EXISTING SAMPLE STANDARD
C  DEVIATIONS.
C  THE SMALLER THE NUMBER, THE TIGHTER THE VARIABLE WILL HOLD TO ITS
C  INITIAL A PRIORI VALUE.
CX    WS    =    0.050
CX    WQ    =    0.050
CX    WTX   =    0.040 OR 1.000
CX    WTY   =    0.040 OR 1.000
CX    WTZ   =    0.040 OR 1.000
CX    WTOPK =    0.349
CX    WTXYC =   20.000
      WTPPO =    1.0D0
      WTDFL =    1.0D0
      WTAPS =   10.0D0

      DO 111  I = 1, NAPS
  111 EPSLNA(I) = 0D0

C  ITERATIONS BEGIN WITH ITER = 0.

  112 ITER = ITER + 1
      IERR = 0

C  COUNT THE NUMBER OF PHOTOS (NPHOTOS) IN THE ADJUSTMENT.
C     JOBCNT: STRIP SEQUENCE NUMBER FOR THE 1ST, 2ND, 3RD, ..., STRIP
C     NPHOTO(I): THE NUMBER OF PHOTOS IN THE I-TH JOB

      NPHOTOS = 0
      DO 405  I = 1, JOBCNT
  405 NPHOTOS = NPHOTOS + NPHOTO(I)

C  INITIALIZE NORMAL EQUATION MATRICES TO ZERO.  THE NORMAL EQUATION
C  MATRIX CAN HOLD A MAXIMUM OF 10 PHOTOS AND 200 GROUND POINTS.
C  [THE MATRIXES WILL BE DEFINED BY A VARIABLE.]
C     EN: THE NORMAL EQUATION MATRIX (N)
C     ET: THE RESIDUAL MATRIX (T)
C     EX: THE MATRIX OF THE CORRECTIONS TO THE PARAMETERS (X)
```

```
      CALL MZERO (EN,435600)
      CALL MZERO (ET,660)
      CALL MZERO (EX,660)


C  * < * < * <  BEGIN OUTER LOOP -- DO FOR EACH GROUND POINT  > * > * >
*

C  THE OUTER LOOP PROGRESSES DOWN THE LOADER TABLE ROW BY ROW
C  (GROUND POINT BY GROUND POINT) UNTIL ALL THE GROUND POINTS
C  ARE USED IN THE EQUATIONS.
C     NUMG: TOTAL NUMBER OF GROUND POINTS

      DO 500 IJ=1,NUMG

C  * > * >  BEGIN INNER LOOP -- DO FOR EACH PHOTO CONTAINING POINT  < *

C  THE INNER LOOP PROGRESSES ALONG THE LOADER TABLE COLUMN BY COLUMN
C  (PHOTO BY PHOTO) UNTIL THERE ARE NO MORE COLUMN ENTRIES IN THE ROW.
C  AN ENTRY WILL APPEAR IN THE COLUMN OF THE LOADER TABLE IF THE GROUND

C  POINT IN QUESTION APPEARS ON THE PHOTO.
C     KOUNT:     THE NUMBER OF PHOTOS ON WHICH THE GROUND POINT APPEARS

C     ISEQG(IJ): THE NUMBER OF PHOTOS THAT THE GROUND POINT FALLS ON
C                (EXAMPLE: 1-IF IT FALLS ON ONE PHOTO, 2-IF IT FALLS
C                WITHIN AN OVERLAP AREA, 3-IF IT FALLS IN A TRI-LAP
C                AREA)

      KOUNT  = ISEQG(IJ)
      DO 475  IP = 1, KOUNT

C  CALCULATE PHOTO SEQUENCE NUMBER AND IMAGE POINT NUMBER.
C     NPHOTOS: THE TOTAL NUMBER OF PHOTOS IN THE ADJUSTMENT
C     ISTEP:   THE PHOTO SEQUENCE NUMBER (OF THE TOTAL NUMBER OF
C              PHOTOS)
C     K:       THE IMAGE POINT NUMBER (AS IT APPEARS ON THE PHOTO)

      ISTEP = LOADER(IJ,IP)/100
      K     = LOADER(IJ,IP) - ISTEP*100
      IPHOT = ISEQP(ISTEP)
      READ(31,REC=IPHOT) I,STRP,FOTO,F


C  GET IMAGE DATA
C     NPTSP:   THE NUMBER OF POINTS ON THE PHOTO (I4)
C     STRIPID: THE STRIP IDENTIFICATION NUMBER (A4)
C     PHTOTID: THE PHOTO IDENTIFICATION NUMBER (A4)
C     IPHOT:   THE FIRST RECORD OF A PHOTO
C     F:       THE FOCAL LENGTH
```

```
C     NS:      STRIP NAME (FOR A PARTICULAR POINT;
C                          EXAMPLE: 301, 503, 705)

      IPHOT = ISEQP(ISTEP) + K
      IF (IPHOT .LE. 0) GO TO 706
  705 FORMAT(6X,'ISTEP =',I5,5X,'IPHOT =',I5)
  706 READ(31,REC=IPHOT) I,STRP,FOTO,NAME,X,Y,WS,WQ

C  EVALUATE LINEARIZED COLLINEARITY EQUATIONS
C     X,Y: IMAGE COORDINATES
C     XS,YS,ZS: GROUND COORDINATES
C     ORIENT(*,ISTEP): ORIENTATION PARAMETERS--OMEGA,PHI,KAPPA,XL,YL,ZL

      CALL COLLINAP (X,Y,XS(IJ),YS(IJ),ZS(IJ),
     @               ORIENT(1,ISTEP),ORIENT(2,ISTEP),ORIENT(3,ISTEP),
     @               ORIENT(4,ISTEP),ORIENT(5,ISTEP),ORIENT(6,ISTEP),
     @               B,C,D,E,F,NAPS,XO,YO,DF,K1,K2,K3,P1,P2,
     @               A1,A2,A3,A4,B1,B2,B3,B4,B5,B6)

C  APPLY IMAGE WEIGHTS:
      DO 410 I=1,6
         WB(1,I) = B(1,I) / WS**2
  410    WB(2,I) = B(2,I) / WQ**2
      DO 411 I=1,3
         WC(1,I) = C(1,I) / WS**2
  411    WC(2,I) = C(2,I) / WQ**2
      DO 412 I=1,NAPS
         WD(1,I) = D(1,I) / WS**2
  412    WD(2,I) = D(2,I) / WQ**2
         WE(1) = E(1) / WS**2
         WE(2) = E(2) / WQ**2

         N = NAPS
         M = 18

C  CALCULATE SUBMATRICES OF PARTITIONED OBSERVATION EQUATIONS.
      CALL MAMULT (B,2,6,2,WB,2,6,2,BTB,6,0,0)
      CALL MAMULT (C,2,3,2,WB,2,6,2,CTB,3,0,0)
      CALL MAMULT (D,2,N,2,WB,2,6,2,DTB,M,0,0)
      CALL MAMULT (B,2,6,2,WC,2,3,2,BTC,6,0,0)
      CALL MAMULT (C,2,3,2,WC,2,3,2,CTC,3,0,0)
      CALL MAMULT (D,2,N,2,WC,2,3,2,DTC,M,0,0)
      CALL MAMULT (B,2,6,2,WD,2,N,2,BTD,6,0,0)
      CALL MAMULT (C,2,3,2,WD,2,N,2,CTD,3,0,0)
      CALL MAMULT (D,2,N,2,WD,2,N,2,DTD,M,0,0)
      CALL MAMULT (B,2,6,2,WE,2,1,2,BTE,6,0,0)
      CALL MAMULT (C,2,3,2,WE,2,1,2,CTE,3,0,0)
      CALL MAMULT (D,2,N,2,WE,2,1,2,DTE,M,0,0)
```

```
C  FILL THE N11 SUBMATRIX:
      NR = 6 * ( ISTEP - 1 )
      DO 420  I = 1, 6
         NR = NR + 1
         NC = 6 * ( ISTEP - 1 )
      DO 420  J = 1, 6
         NC = NC + 1
  420    EN(NR,NC) = EN(NR,NC) + BTB(I,J)

C  FILL THE N21 SUBMATRIX:
      NR = 6 * NPHOTOS  +  3 * ( IJ - 1 )
      DO 425  I = 1, 3
         NR = NR + 1
         NC = 6 * ( ISTEP - 1 )
      DO 425  J = 1, 6
         NC = NC + 1
  425    EN(NR,NC) = EN(NR,NC) + CTB(I,J)

C  FILL THE N31 SUBMATRIX:
      NR = 6 * NPHOTOS  +  3 * NUMG
      DO 427  I = 1, NAPS
         NR = NR + 1
         NC = 6 * ( ISTEP - 1 )
      DO 427  J = 1, 6
         NC = NC + 1
  427    EN(NR,NC) = EN(NR,NC) + DTB(I,J)

C  FILL THE N12 SUBMATRIX:
      NR = 6 * ( ISTEP - 1 )
      DO 430  I = 1, 6
         NR = NR + 1
         NC = 6 * NPHOTOS  +  3 * ( IJ - 1 )
      DO 430  J = 1, 3
         NC = NC + 1
  430    EN(NR,NC) = EN(NR,NC) + BTC(I,J)

C  FILL THE N22 SUBMATRIX:
      NR = 6 * NPHOTOS  +  3 * ( IJ - 1 )
      DO 435  I = 1, 3
         NR = NR + 1
         NC = 6 * NPHOTOS  +  3 * ( IJ - 1 )
      DO 435  J = 1, 3
         NC = NC + 1
  435    EN(NR,NC) = EN(NR,NC) + CTC(I,J)

C  FILL THE N32 SUBMATRIX:
      NR = 6 * NPHOTOS  +  3 * NUMG
      DO 437  I = 1, NAPS
         NR = NR + 1
         NC = 6 * NPHOTOS  +  3 * ( IJ - 1 )
```

```
      DO 437  J = 1, 3
         NC = NC + 1
  437    EN(NR,NC) = EN(NR,NC) + DTC(I,J)

C  FILL THE N13 SUBMATRIX:
      NR = 6 * ( ISTEP - 1 )
      DO 440  I = 1, 6
         NR = NR + 1
         NC = 6 * NPHOTOS  +  3 * NUMG
      DO 440  J = 1, NAPS
         NC = NC + 1
  440    EN(NR,NC) = EN(NR,NC) + BTD(I,J)

C  FILL THE N23 SUBMATRIX:
      NR = 6 * NPHOTOS  +  3 * ( IJ - 1 )
      DO 445  I = 1, 3
         NR = NR + 1
         NC = 6 * NPHOTOS  +  3 * NUMG
      DO 445  J = 1, NAPS
         NC = NC + 1
  445    EN(NR,NC) = EN(NR,NC) + CTD(I,J)

C  FILL THE N33 SUBMATRIX:
      NR = 6 * NPHOTOS  +  3 * NUMG
      DO 447  I = 1, NAPS
         NR = NR + 1
         NC = 6 * NPHOTOS  +  3 * NUMG
      DO 447  J = 1, NAPS
         NC = NC + 1
  447    EN(NR,NC) = EN(NR,NC) + DTD(I,J)

C  FILL THE T1 SUBMATRIX:
      TR = 6 * ( ISTEP - 1 )
      DO 470  I = 1, 6
         TR = TR + 1
  470    ET(TR) = ET(TR) + BTE(I)

C  FILL THE T2 SUBMATRIX:
      TR = 6 * NPHOTOS  +  3 * ( IJ - 1 )
      DO 471  I = 1, 3
         TR = TR + 1
  471    ET(TR) = ET(TR) + CTE(I)

C  FILL THE T3 SUBMATRIX:
      TR = 6 * NPHOTOS  +  3 * NUMG
      DO 472  I = 1, NAPS
         TR = TR + 1
  472    ET(TR) = ET(TR) + DTE(I)

  475 CONTINUE
```

```
C  * > * > * > * > * >  END INNER LOOP  < * < * < * < * < *

C  APPLY WEIGHTS TO THE GROUND POINTS.  WEIGHTS ARE APPLIED TO
C  THE N22 AND T2 SUBMATRICES ONLY ONCE FOR EVERY GROUND POINT.
C     WCN22: WEIGHT CORRECTION TO BE ADDED TO THE N22 SUBMATRIX
C     WCT2:  WEIGHT CORRECTION TO BE ADDED TO THE T2  SUBMATRIX

      CALL MZERO (WCN22,3)
      WCN22(1) = 1.0/(WTX(IJ)**2)
      WCN22(2) = 1.0/(WTY(IJ)**2)
      WCN22(3) = 1.0/(WTZ(IJ)**2)

      CALL MZERO (WCT2,3)
      WCT2(1) = -(EPSLNG(IJ,1)/(WTX(IJ)**2))
      WCT2(2) = -(EPSLNG(IJ,2)/(WTY(IJ)**2))
      WCT2(3) = -(EPSLNG(IJ,3)/(WTZ(IJ)**2))

C  ADD WEIGHT CORRECTION TO THE N22 SUBMATRIX:
      NR = 6 * NPHOTOS  +  3 * ( IJ - 1 )
      NC = 6 * NPHOTOS  +  3 * ( IJ - 1 )
      DO 480  I = 1, 3
         NR = NR + 1
         NC = NC + 1
  480    EN(NR,NC) = EN(NR,NC) + WCN22(I)

C  ADD WEIGHT CORRECTION TO THE T2 SUBMATRIX:
      TR = 6 * NPHOTOS  +  3 * ( IJ - 1 )
      DO 485  I = 1, 3
         TR = TR + 1
  485    ET(TR) = ET(TR) + WCT2(I)

  500 CONTINUE

C  * < * < * < * < *  END OUTER LOOP  * > * > * > * > *

C  APPLY WEIGHTS TO THE ORIENTATION PARAMETERS.  WEIGHTS ARE APPLIED
C  TO THE N11 AND T1 SUBMATRICES ONLY ONCE FOR EVERY PHOTO.
C     WCN11: WEIGHT CORRECTION TO BE ADDED TO THE N11 SUBMATRIX
C     WCT1:  WEIGHT CORRECTION TO BE ADDED TO THE T1 SUBMATRIX

      CALL MZERO (WCN11,6)
      WCN11(1) = 1.0 / (SIG(1,ISTEP)**2)
      WCN11(2) = 1.0 / (SIG(2,ISTEP)**2)
      WCN11(3) = 1.0 / (SIG(3,ISTEP)**2)
      WCN11(4) = 1.0 / (SIG(4,ISTEP)**2)
      WCN11(5) = 1.0 / (SIG(5,ISTEP)**2)
      WCN11(6) = 1.0 / (SIG(6,ISTEP)**2)

      DO 510  ISTEP = 1, NPHOTOS
```

```
      CALL MZERO (WCT1,6)
      WCT1(1) = -WCN11(1) * EPSLNP(ISTEP,1)
      WCT1(2) = -WCN11(2) * EPSLNP(ISTEP,2)
      WCT1(3) = -WCN11(3) * EPSLNP(ISTEP,3)
      WCT1(4) = -WCN11(4) * EPSLNP(ISTEP,4)
      WCT1(5) = -WCN11(5) * EPSLNP(ISTEP,5)
      WCT1(6) = -WCN11(6) * EPSLNP(ISTEP,6)

C  ADD WEIGHT CORRECTION TO THE N11 SUBMATRIX:
      NR = 6 * ( ISTEP - 1 )
      NC = 6 * ( ISTEP - 1 )
      DO 505  I = 1, 6
         NR = NR + 1
         NC = NC + 1
  505    EN(NR,NC) = EN(NR,NC) + WCN11(I)

C  ADD WEIGHT CORRECTION TO THE T1 SUBMATRIX:
      TR = 6 * ( ISTEP - 1 )
      DO 507  I = 1, 6
         TR = TR + 1
  507    ET(TR) = ET(TR) + WCT1(I)

  510 CONTINUE

C  APPLY WEIGHTS TO THE ADDITIONAL PARAMETERS.  WEIGHTS
C  ARE APPLIED TO THE N33 AND T3 SUBMATRICES ONLY ONCE.
C     WCN33: WEIGHT CORRECTION TO BE ADDED TO THE N33 SUBMATRIX
C     WCT3:  WEIGHT CORRECTION TO BE ADDED TO THE T3 SUBMATRIX

      WCN33(1)  = 1.0 / (WTPPO)**2
      WCN33(2)  = 1.0 / (WTPPO)**2
      WCN33(3)  = 1.0 / (WTDFL)**2
      WCN33(4)  = 1.0 / (WTAPS)**2
      WCN33(5)  = 1.0 / (WTAPS)**2
      WCN33(6)  = 1.0 / (WTAPS)**2
      WCN33(7)  = 1.0 / (WTAPS)**2
      WCN33(8)  = 1.0 / (WTAPS)**2
      WCN33(9)  = 1.0 / (WTAPS)**2
      WCN33(10) = 1.0 / (WTAPS)**2
      WCN33(11) = 1.0 / (WTAPS)**2
      WCN33(12) = 1.0 / (WTAPS)**2
      WCN33(13) = 1.0 / (WTAPS)**2
      WCN33(14) = 1.0 / (WTAPS)**2
      WCN33(15) = 1.0 / (WTAPS)**2
      WCN33(16) = 1.0 / (WTAPS)**2
      WCN33(17) = 1.0 / (WTAPS)**2
      WCN33(18) = 1.0 / (WTAPS)**2

      WCT3(1)  = -WCN33(1)  * EPSLNA(1)
      WCT3(2)  = -WCN33(2)  * EPSLNA(2)
```

```
      WCT3(3)  = -WCN33(3)  * EPSLNA(3)
      WCT3(4)  = -WCN33(4)  * EPSLNA(4)
      WCT3(5)  = -WCN33(5)  * EPSLNA(5)
      WCT3(6)  = -WCN33(6)  * EPSLNA(6)
      WCT3(7)  = -WCN33(7)  * EPSLNA(7)
      WCT3(8)  = -WCN33(8)  * EPSLNA(8)
      WCT3(9)  = -WCN33(9)  * EPSLNA(9)
      WCT3(10) = -WCN33(10) * EPSLNA(10)
      WCT3(11) = -WCN33(11) * EPSLNA(11)
      WCT3(12) = -WCN33(12) * EPSLNA(12)
      WCT3(13) = -WCN33(13) * EPSLNA(13)
      WCT3(14) = -WCN33(14) * EPSLNA(14)
      WCT3(15) = -WCN33(15) * EPSLNA(15)
      WCT3(16) = -WCN33(16) * EPSLNA(16)
      WCT3(17) = -WCN33(17) * EPSLNA(17)
      WCT3(18) = -WCN33(18) * EPSLNA(18)

C  ADD WEIGHT CORRECTION TO THE N33 SUBMATRIX:
      NR = 6 * NPHOTOS  +  3 * NUMG
      NC = 6 * NPHOTOS  +  3 * NUMG
      DO 520  I = 1, NAPS
         NR = NR + 1
         NC = NC + 1
  520    EN(NR,NC) = EN(NR,NC) + WCN33(I)

C  ADD WEIGHT CORRECTION TO THE T3 SUBMATRIX:
      TR = 6 * NPHOTOS  +  3 * NUMG
      DO 525  I = 1, NAPS
         TR = TR + 1
  525    ET(TR) = ET(TR) + WCT3(I)

C  SOLVE FOR THE CORRECTIONS TO PARAMETERS (THE X MATRIX).

      NROW = 6 * NPHOTOS  +  3 * NUMG  +  NAPS
      NDR  = 660
      CALL MAINV  (EN,NROW,NDR)
      CALL MAMULT (EN,NROW,NROW,NDR,ET,NROW,1,NDR,EX,NDR,-1,0)

C  APPLY CORRECTIONS TO THE ORIENTATION PARAMETERS FOR EACH PHOTO.
C     NPLATE: THE TOTAL NUMBER OF PHOTOGRAPHIC PLATES IN A BLOCK
C     EPSLNP: EPSILON-P WHICH IS ADDED TO THE T1 SUBMATRIX

         PRINT *, ' THE X MATRIX: [TOP PART]'
      DO 550 IP = 1, NPLATE
         I = (IP-1)*6
      DO 550 J = 1, 6
         I = I + 1
         ORIENT(J,IP) = ORIENT(J,IP) + EX(I)
         EPSLNP(IP,J) = EPSLNP(IP,J) + EX(I)
         PRINT *, EX(I),I
```

```
  550 CONTINUE

C  APPLY CORRECTIONS TO THE GROUND POINT COORDINATES.
C     XS,YS,ZS: GROUND POINT COORDINATES
C     EPSLNG:   EPSILON-X WHICH IS ADDED TO THE T2 SUBMATRIX

      DO 560  IJ = 1, NUMG
         XS(IJ) = XS(IJ) + EX(6*NPHOTOS + 3*(IJ-1) + 1)
         YS(IJ) = YS(IJ) + EX(6*NPHOTOS + 3*(IJ-1) + 2)
         ZS(IJ) = ZS(IJ) + EX(6*NPHOTOS + 3*(IJ-1) + 3)

         EPSLNG(IJ,1) = EPSLNG(IJ,1) + EX(6*NPHOTOS + 3*(IJ-1) + 1)
         EPSLNG(IJ,2) = EPSLNG(IJ,2) + EX(6*NPHOTOS + 3*(IJ-1) + 2)
         EPSLNG(IJ,3) = EPSLNG(IJ,3) + EX(6*NPHOTOS + 3*(IJ-1) + 3)

C  CHECK FOR MAXIMUM CORRECTION.
         IF (EX(6*NPHOTOS + 3*(IJ-1) + 1) .GT. 0.0005) IERR = 1
         IF (EX(6*NPHOTOS + 3*(IJ-1) + 2) .GT. 0.0005) IERR = 1
         IF (EX(6*NPHOTOS + 3*(IJ-1) + 3) .GT. 0.0005) IERR = 1

  560 CONTINUE

C  APPLY CORRECTIONS TO THE ADDITIONAL PARAMETERS.
C     XO,YO:      PRINCIPAL POINT COORDINATES
C     DF:         CORRECTION TO FOCAL LENGTH
C     K1,K2,K3:   CORRECTION OF SYMMETRIC RADIAL DISTORTION
C     P1,P2:      CORRECTION OF DECENTERING DISTORTION
C     A1,A2,A3,
C       ...,B6:   CORRECTION FOR EMPIRICAL DISTORTIONS
C     EPSLNA:   EPSILON-A WHICH IS ADDED TO THE T3 SUBMATRIX

      XO  = XO  + EX(6*NPHOTOS + 3*NUMG + 1)
      YO  = YO  + EX(6*NPHOTOS + 3*NUMG + 2)
      DF  = DF  + EX(6*NPHOTOS + 3*NUMG + 3)
      K1  = K1  + EX(6*NPHOTOS + 3*NUMG + 4)
      K2  = K2  + EX(6*NPHOTOS + 3*NUMG + 5)
      K3  = K3  + EX(6*NPHOTOS + 3*NUMG + 6)
      P1  = P1  + EX(6*NPHOTOS + 3*NUMG + 7)
      P2  = P2  + EX(6*NPHOTOS + 3*NUMG + 8)
      A1  = A1  + EX(6*NPHOTOS + 3*NUMG + 9)
      A2  = A2  + EX(6*NPHOTOS + 3*NUMG + 10)
      A3  = A3  + EX(6*NPHOTOS + 3*NUMG + 11)
      A4  = A4  + EX(6*NPHOTOS + 3*NUMG + 12)
      B1  = B1  + EX(6*NPHOTOS + 3*NUMG + 13)
      B2  = B2  + EX(6*NPHOTOS + 3*NUMG + 14)
      B3  = B3  + EX(6*NPHOTOS + 3*NUMG + 15)
      B4  = B4  + EX(6*NPHOTOS + 3*NUMG + 16)
      B5  = B5  + EX(6*NPHOTOS + 3*NUMG + 17)
      B6  = B6  + EX(6*NPHOTOS + 3*NUMG + 18)
```

```
      DO 570  I = 1, NAPS
  570    EPSLNA(I) = EPSLNA(I) + EX(6*NPHOTOS + 3*NUMG + I)

      WRITE(40,*)' '
      WRITE(40,*)'THE X MATRIX:'
      WRITE(40,*)' '
      DO 650  I = 1, NROW
      WRITE(40,640)I,EX(I)
  640 FORMAT(1X,'X(',I3,') = ',E13.4)
  650 CONTINUE

C  TEST FOR CONVERGENCE AND ITERATE IF NECESSARY.

      PRINT *, ' IERR',IERR,' ITER',ITER
      IF (ITER .LE. 2) GO TO 112
      IF (IERR .EQ. 0) GO TO 250
      IF (ITER .LE. ISTOP) GO TO 112
      WRITE (H,3011)

C  PRINT OUT FINAL VALUES FOR FOCAL LENGTH AND PRINCIPAL POINT OFFSET.

  250 F = F + DF
      WRITE(H,5011)F,DF,XO,YO

      GO TO 251

C  * * * * * * * * * * * * * * * * * * * * * * * * * * * * * * * * * *
C  * * * * * * * * * * * * * * * * * * * * * * * * * * * * * * * * * *
C  * * * *  END ITERATIVE SOLUTION OF SIMULTANEOUS EQUATIONS * * * *
C  * * * * * * * * * * * * * * * * * * * * * * * * * * * * * * * * * *
C  * * * * * * * * * * * * * * * * * * * * * * * * * * * * * * * * * *

C        OUTPUT

  251 WRITE (H,3024) ITER

C        TRANSLATE GROUND COORDINATE ORIGIN BACK TO ORIGINAL LOCATION
      DO 220 I=1,NUMG
      XS(I) = XS(I) + XGTR
      YS(I) = YS(I) + YGTR
  220 ZS(I) = ZS(I) + ZGTR
      VSAVE = 0.0
      ISTEP = 0
      DO 260 IJ=1,NPLATE
      IPHOT = ISEQP(IJ)
      READ (31,REC=IPHOT) K,STRP,FOTO,F
      IF (IPRNT .EQ.1) WRITE (H,3012) FOTO,STRP,F
      ORIENT(4,IJ) = ORIENT(4,IJ) + XGTR
      ORIENT(5,IJ) = ORIENT(5,IJ) + YGTR
      ORIENT(6,IJ) = ORIENT(6,IJ) + ZGTR
```

```
      IF (IPRNT .EQ.1) WRITE (H,3013) (ORIENT(I,IJ),I=4,6)
      CALL CONVRT (ORIENT(1,IJ),IODEG,OMIN)
      CALL CONVRT (ORIENT(2,IJ),IPDEG,PMIN)
      CALL CONVRT (ORIENT(3,IJ),ICDEG,CMIN)
      IF (IPRNT .EQ.1) WRITE (H,3014) IODEG,OMIN,IPDEG,PMIN,ICDEG,CMIN
      IF (IPRNT .EQ.1) WRITE (H,3015)

C        EVALUATE COLLINEARITY EQUATIONS AND PRINT IMAGE COORD.
C           WITH RESIDUALS
      DO 255 I=1,K
      READ (31,REC=IPHOT) L,STRP,FOTO,NAME,X,Y,WS,WQ
C        FIND GROUND COORD. OF THIS POINT
      DO 252 L=1,NUMG
      IF (NAME .EQ. NS(L)) GO TO 254
  252 CONTINUE
      GO TO 255
  254 ISTEP = ISTEP + 1

C  HERE IS WHERE THE CORRECTIONS TO IMAGE POINTS COME FROM

      CALL COLLINAP (X,Y,XS(L),YS(L),ZS(L),
     @               ORIENT(1,IJ),ORIENT(2,IJ),ORIENT(3,IJ),
     @               ORIENT(4,IJ),ORIENT(5,IJ),ORIENT(6,IJ),
     @               B,C,D,E,F,NAPS,XO,YO,DF,K1,K2,K3,P1,P2,
     @               A1,A2,A3,A4,B1,B2,B3,B4,B5,B6)

      IF (IPRNT .EQ.1) WRITE (H,3016) NAME,X,E(1),Y,E(2),WS,WQ
      VSAVE = VSAVE + E(1)**2 + E(2)**2
      IF (MFLAG .EQ. 2) GO TO 255

C     TEST PLATE RESIDUAL AND IF LARGER THAN 'TEST', EDIT BY WEIGHTING
      IF (DABS(E(1)) .LT. TEST .AND. DABS(E(2)) .LT. TEST) GO TO 255
      MFLAG = 1
      M = IPHOT
      KOUNT = ISEQG(L)
      DO 350 J=1,KOUNT
      N = LOADER(L,J)/100
      IP = LOADER(L,J) - N*100
      IPHOT = ISEQP(N) + IP
      READ(31,REC=IPHOT) KSE,STRP,FOTO,NAME,X,Y,WS,WQ
      WS = WOUT
      WQ = WOUT
      IPHOT = IPHOT - 1
      WRITE(31,REC=IPHOT) KSE,STRP,FOTO,NAME,X,Y,WS,WQ
  350 CONTINUE
      IPHOT = M
  255 CONTINUE
C        END PHOTO OUTPUT LOOP
  260 CONTINUE
      IF (MFLAG .EQ. 0 .OR. MFLAG .EQ. 2) GO TO 269
```

```
      ITER = 0
      MFLAG = 2
      DO 266 I=1,NUMG
      XS(I) = XS(I)-XGTR
      YS(I) = YS(I)-YGTR
  266 ZS(I) = ZS(I)-ZGTR
      DO 268 I = 1,NPLATE
      ORIENT (4,I) = ORIENT(4,I)-XGTR
      ORIENT (5,I) = ORIENT(5,I)-YGTR
  268 ORIENT (6,I) = ORIENT(6,I)-ZGTR
      GO TO 112

C        PRINT ADJUSTED GROUND COORDINATES
  269 M = 2 * ISTEP
      WR = M
      IF (M) 271,271,272
  271 VSAVE = 0.0
      GO TO 273
  272 VSAVE = SQRT(VSAVE/WR)
  273 WRITE (H,3017) NPLATE,NUMG,ISTEP
      WRITE (H,3018) VSAVE,M
      IF (IGRPT .EQ. 1) WRITE (H,3019)
      DO 275 IJ=1,NUMG
      IF (IPNCH .EQ. 1) WRITE (17,3029) NS(IJ),XS(IJ),YS(IJ),ZS(IJ)
  275 IF (IGRPT .EQ. 1) WRITE (H,3020) NS(IJ),XS(IJ),YS(IJ),ZS(IJ),
     1(EPSLNG(IJ,I),I=1,3)
     2,WTX(IJ),WTY(IJ),WTZ(IJ)

      WRITE (40,5004)
 5004 FORMAT (' PHOTO ORIENTATION CORRECTIONS',/,
     &'   OMEGA          PHI        KAPPA',3X,
     &'     XC           YC           ZC')

      DO 290 I=1,NPLATE
  290 WRITE (40,5003) (EPSLNP(I,J),J=1,6)
 5003 FORMAT (3E12.4,3F10.4)
C
C
      IF (IPNCH .NE. 1) GO TO 276
      DO 291 IP = 1,NPLATE
  291 WRITE (17,3009) SEQP(IP),ORIENT(4,IP),ORIENT(5,IP)
C
C
  276 IF (IPLOT .EQ. 0) STOP

C   PROCESS STRIPS FOR PLOTTER ORIENTATION PARAMETERS
C
      IP = 0
      DO 267 IJ=1,JOBCNT
      IP = IP + 1
```

```
      I = LIST(IP)
      WRITE (H,3025) DATE
      ICAT = JOB(IJ)
      READ (30,REC=ICAT) JOBR,(HEDR(J), J=1,20),L,KSE
      WRITE (H,3026) JOBR,(HEDR(J), J=1,20),L
      WRITE (H,3027)
C
      IPHOT = ISEQP(I)
      READ (31,REC=IPHOT) L,STRP,SFOTO
C
      CALL FLTLIN (ORIENT(1,I))
      KOUNT = NPHOTO(IJ) - 1
C
      DO 263 J=2,KOUNT
      IP = IP + 1
      I = LIST(IP)
      IPHOT = ISEQP(I)
      READ (31,REC=IPHOT) L,STRP,FOTO
      CALL FLTADD (ORIENT(1,I),XGTR,YGTR,PLTSET)
      XGTR = XGTR/SCALE
      IF (YGTR .LT. 0.0) GO TO 280
      WRITE (H,3034) SFOTO,FOTO,XGTR,YGTR,(PLTSET(K),K=1,6)
      GO TO 281
  280 YGTR = DABS(YGTR)
      WRITE (H,3035) SFOTO,FOTO,XGTR,YGTR,(PLTSET(K),K=1,6)
  281 SFOTO = FOTO
C
  263 CONTINUE
C
      IP = IP + 1
      I = LIST(IP)
      IPHOT = ISEQP(I)
      READ (31,REC=IPHOT) L,STRP,FOTO
      CALL FLTEND (ORIENT(1,I),XGTR,YGTR,PLTSET,X,Y,M,FXY)
      XGTR = XGTR/SCALE
      IF (YGTR .LT. 0.0) GO TO 282
      WRITE (H,3034) SFOTO,FOTO,XGTR,YGTR,(PLTSET(K),K=1,6)
      GO TO 283
  282 YGTR = DABS(YGTR)
      WRITE (H,3035) SFOTO,FOTO,XGTR,YGTR,(PLTSET(K),K=1,6)
  283 CONTINUE
C
      GO TO (261,262,264,265),M
  261 ZGTR = 1.57079633 - DATAN(Y)
      CALL CONVRT(ZGTR,IODEG,OMIN)
      WRITE (H,3032) X,IODEG,OMIN
      WRITE (H,3031) (FXY(I), I=1,4)
      GO TO 267
C
  262 ZGTR = -1.57079633 - DATAN(Y)
```

```
      CALL CONVRT(ZGTR,IODEG,OMIN)
      WRITE (H,3032) X,IODEG,OMIN
      WRITE (H,3031) (FXY(I), I=1,4)
      GO TO 267
C
  264 ZGTR = -DATAN(Y)
      CALL CONVRT(ZGTR,IODEG,OMIN)
      WRITE (H,3033) X,IODEG,OMIN
      WRITE (H,3031) (FXY(I), I=1,4)
      GO TO 267
C
  265 ZGTR = -DATAN(Y)
      CALL CONVRT(ZGTR,IODEG,OMIN)
      WRITE (H,3033) X,IODEG,OMIN
      WRITE (H,3031) (FXY(I), I=1,4)
  267 CONTINUE
C
C
      IF (IPLOT .LE. 1) STOP
C
C   PRINT MODEL SETUP SHEETS
C
      IP = 0
      DO 298 IJ=1,JOBCNT
      IP = IP + 1
      I = LIST(IP)
      WRITE (H,3028) DATE
      ICAT = JOB(IJ)
      READ (30,REC=ICAT) JOBR,(HEDR(J), J=1,20),L,KSE
      WRITE (H,3038) JOBR,(HEDR(J), J=1,20),L
      WRITE (H,3039)
C
      IPHOT = ISEQP(I)
      READ (31,REC=IPHOT) L,STRP,SFOTO
C
      CALL FLTLIN (ORIENT(1,I))
      KOUNT = NPHOTO(IJ) - 1
C
      DO 295 J=2,KOUNT
      IP = IP + 1
      I = LIST(IP)
      IPHOT = ISEQP(I)
      READ (31,REC=IPHOT) L,STRP,FOTO
      CALL FLTADD (ORIENT(1,I),XGTR,YGTR,PLTSET)
      XGTR = XGTR/SCALE
      IF (YGTR .LT. 0.0) GO TO 292
      WRITE (H,3034) SFOTO,FOTO,XGTR,YGTR,(PLTSET(K),K=1,6)
      GO TO 293
  292 YGTR = DABS(YGTR)
      WRITE (H,3035) SFOTO,FOTO,XGTR,YGTR,(PLTSET(K),K=1,6)
```

```
  293 SFOTO = FOTO
C
  295 CONTINUE
C
      IP = IP + 1
      I = LIST(IP)
      IPHOT = ISEQP(I)
      READ (31,REC=IPHOT) L,STRP,FOTO
      CALL FLTEND (ORIENT(1,I),XGTR,YGTR,PLTSET,X,Y,M,FXY)
      XGTR = XGTR/SCALE
      IF (YGTR .LT. 0.0) GO TO 296
      WRITE (H,3034) SFOTO,FOTO,XGTR,YGTR,(PLTSET(K),K=1,6)
      GO TO 297
  296 YGTR = DABS(YGTR)
      WRITE (H,3035) SFOTO,FOTO,XGTR,YGTR,(PLTSET(K),K=1,6)
  297 CONTINUE
      DO 298 I=1,4
      WRITE(H,3040)
  298 CONTINUE

C     FORMATS

 1000 FORMAT (I5,5F10.3,I5)
 1001 FORMAT (A4,6X,I5)
 1002 FORMAT (16(1X,A4))
 1003 FORMAT (5I5)
 2001 FORMAT (10X,I5,5X,20A4,2I10)
 3002 FORMAT (//,10X,A6,'OCCURS ON MORE THAN 10 PHOTOS')
 3003 FORMAT (////,10X,'WT. OMEGA,PHI,KAPPA =',E12.3,
     @5X,'WT. XC,YC,ZC =',E12.3)
 3004 FORMAT (1H1,/,10X,'** A N A L Y T I C A L   A E R O T R I A N G
     @U L A T I O N **',29X,////,10X,'SIMULTANEOUS COLLINEARITY
     @ADJUSTMENT OF THE FOLLOWING JOBS',/////,10X,'JOB',15X,'JOB
     @IDENTIFICATION'/)
 3005 FORMAT (10X,I3,15X,20A4,//)
 3055 FORMAT (10X,'PHOTOS',10X,'POINTS',/)
 3056 FORMAT (10X,I6,7X,I9)
 3006 FORMAT (////,10X,'NUMBER OF PHOTOGRAPHS ADJUSTED',I8,/,10X,
     @'NUMBER OF GROUND POINTS',I8)
 3007 FORMAT (///,10X,'RUN STOPPED BY PROGRAM - CHECK CAPACITIES')
 3008 FORMAT (//,10X,'BANDWIDTH IS',I3,' PHOTOGRAPHS')
 3009 FORMAT (6X,'P',A3,3F15.2)
 3029 FORMAT (6X,A4,3F15.2)
 3010 FORMAT (//,10X,'NORMAL EQUATIONS NOT SOLVED   ***   ERROR
     @PARAMETER IS',I3)
 3011 FORMAT (//,10X,'ITERATION STOP')
 3012 FORMAT (1H1,/, 9X,'PHOTOGRAPH NUMBER',A6,'  STRIP',A5,
     &        '  FOCAL LENGTH =',F10.3)
 3013 FORMAT (//, 9X,'CAMERA EXPOSURE STATION',/,35X,'COORDINATES',
     @/,26X,'X',14X,'Y',14X,'Z',/,15X,3F15.2)
```

```
3014 FORMAT(/,35X,'ORIENTATION',/,22X,'OMEGA',12X,'PHI',10X,'KAPPA',/,
    @23X,3('O',6X'/',7X),/,15X,3(I8,F7.2),//,9X,'IMAGE POINTS')
3015 FORMAT (/,60X,'A-PRIORI',/,24X,'REFINED COORDINATES',17X,'STD.
    @DEV.',/,9X,'POINT',10X,'X',6X,'VX',11X,'Y',6X,'VY',8X,'X',
    @5X,'Y')
3016 FORMAT (9X,A4,2(F13.3,F7.3),3X,2F6.3)
3017 FORMAT (1H1,/,10X,'SIMULTANEOUS COLLINEARITY ADJUSTMENT',27X,///,
    @14X,I4,' PHOTOGRAPHS,',I6,' GROUND POINTS,',I6,' IMAGE POINTS')
3018 FORMAT  (//,10X,'STANDARD DEVIATION OF UNIT WEIGHT  =',E13.4,'
    @MM',/,10X,'DEGREES OF FREEDOM  =',I5)
3019 FORMAT (///,33X,'GROUND POINTS',//,49X,'TOTAL',13X,'A-PRIORI',
    @/,15X,'ADJUSTED COORDINATE',13X,'CORRECTION',7X,'STD.
    @DEVIATION',/,1X,'NAME',8X,'X',11X,'Y',9X,'Z',8X,'CX',5X,'CY',
    @5X,'CZ',5X,'X',5X,'Y',5X,'Z',/)
3020 FORMAT (1X,A4,2F12.2,F10.2,1X,3F7.2,1X,3F6.2)
3021 FORMAT (9X,A5,8X,A4,7X,I3,7X,2F12.1,F10.1)
3022 FORMAT (1H1,/,10X,'SIMULTANEOUS COLLINEARITY ADJUSTMENT OF THE
    @FOLLOWING PHOTOGRAPHS',///,10X,'PHOTO SEQUENCE ACCORDING TO
    @STRIP',22X,///,31X,'NUMBER',4X,'INITIAL EXPOSURE STATION
    @APPROXIMATIONS',/,10X,'STRIP',6X,'PHOTO',4X,'OF
    @POINTS',11X,'XC',10X,'YC',9X,'ZC',/)
3023 FORMAT (1H1,/,10X,'SIMULTANEOUS COLLINEARITY ADJUSTMENT OF THE FO
    @LLOWING PHOTOGRAPHS',///,10X,'PHOTO SEQUENCE IS ASSIGNED',22X,//
    @/,31X,'NUMBER',4X,'INITIAL EXPOSURE STATION APPROXIMATIONS',/,10
    @X,'STRIP',6X,'PHOTO',4X,'OF POINTS',11X,'XC',10X,'YC',9X,'ZC',/)
3024 FORMAT (//,10X,'ITERATIONS REQUIRED',I4)
3025 FORMAT (1H1,//,10X,'G6 PLOTTER ORIENTATION SETTINGS AND
    1COORDINATES OF GRAPH MANUSCRIPT PARAMETERS',10X,2A4,//)
3028 FORMAT (1H1,//,10X,'G6 PLOTTER ORIENTATION SETTINGS',10X,2A4,/)
3026 FORMAT (10X,'JOB',I5,5X,20A4,/,23X,I8,' PHOTOS IN STRIP',1X,
    1'*** LOW NUMBERED PHOTO ON LEFT PROJECTOR',//)
3038 FORMAT (10X,'JOB',I5,5X,20A4,/,23X,I8,' PHOTOS IN STRIP',1X,
    1'*** LOW NUMBERED PHOTO ON LEFT PROJECTOR',/)
3027 FORMAT (24X,'BASE    COM. PHI     LEFT PROJECTOR (GRADS)',
    18X,'RIGHT PROJECTOR (GRADS)',/,24X,'(MM)',3X,'(RADIANS)',3X,
    2'OMEGA',7X,'PHI',5X,'KAPPA',5X,'OMEGA',7X,'PHI',5X,'KAPPA',//)
3039 FORMAT (24X,'BASE    COM. PHI     LEFT PROJECTOR (GRADS)',
    18X,'RIGHT PROJECTOR (GRADS)',/,24X,'(MM)',3X,'(RADIANS)',3X,
    2'OMEGA',7X,'PHI',5X,'KAPPA',5X,'OMEGA',7X,'PHI',5X,'KAPPA',/)
3030 FORMAT (10X,'PHOTO',A5)
3031 FORMAT (21X,'BEGIN AXIS',2F20.3,/,23X,'END AXIS',2F20.3)
3032 FORMAT (///,10X,'FLIGHT LINE:   LENGTH',F20.2,/,23X,'ROTATION',
    1I6,' DEG.',F8.2,' MIN. FROM NORTH-SOUTH DIRECTION',/)
3033 FORMAT (///,10X,'FLIGHT LINE:   LENGTH',F20.2,/,23X,'ROTATION',
    1I6,' DEG.',F8.2,' MIN. FROM EAST-WEST DIRECTION',/)
3034 FORMAT (5X,'MODEL',2A5,F9.2,'    W',F6.2,6F10.2,/)
3035 FORMAT (5X,'MODEL',2A5,F9.2,'    R',F6.2,6F10.2,/)
3036 FORMAT (30X,'RESECTION RESULTS')
3037 FORMAT (30X,A5,4F12.3)
3040 FORMAT (1H1)
```

```
4000 FORMAT (/,1X,'JOB',10X,'IDENTIFICATION',2I5)
4001 FORMAT (1X,I3,1X,10A4,I5,I5,/)
5010 FORMAT (/,/,10X,'VALUES AS THEY ENTER THE ADDITIONAL PARAMETER BU
    1NDLE ADJUSTMENT',/,/,15X,'FOCAL LENGTH [F] = ',F12.5,/,/,15X,
    2'PRINCIPAL POINT OFFSET:',/,15X,'XO = ',F12.5,/,15X,'YO = ',
    3F12.5,/)
5011 FORMAT (/,10X,'VALUES AS THEY LEAVE THE ADDITIONAL PARAMETER BUND
    1LE ADJUSTMENT',/,/,15X,'FOCAL LENGTH [F] = ',F12.5,/,15X,
    2'CORRECTION [DF] = ',F12.5,/,/,15X,'PRINCIPAL POINT OFFSET:',/,
    315X,'XO = ',F12.5,/,15X,'YO = ',F12.5,/)

      CLOSE(UNIT=15)
      CLOSE(UNIT=16)
      CLOSE(UNIT=30)
      CLOSE(UNIT=31)
      CLOSE(UNIT=32)
      CLOSE(UNIT=33)
      CLOSE(UNIT=40)

      STOP
      END
```

```
C*****************************************************************
C
C              S U B R O U T I N E   C O L L I N A P
C
C  PURPOSE -
C
C     INCORPORATE THE USE OF ADDITIONAL PARAMETERS TO EVALUATE THE
C     COEFFICIENTS OF EACH TERM OF THE LINEARIZED COLLINEARITY
C     EQUATIONS.
C
C  COLLINEARITY EQUATION -
C
C     [V]  +  [BD] [X1]  +  [BDD] [X2]  +  [BDDD] [X3]  =  [F]
C
C  VARIABLES -
C
C       NAME                    DESCRIPTION
C       ----                    -----------
C
C     B = B-DOT               COEFF. OF CAMERA ORIENTATION TERMS
C        (B-DOT)                 B(1) = B(1,1)
C                                B(2) = B(2,1)
C                                B(3) = B(1,2)
C                                    etc.
C
C     C = B-DOT-DOT           COEFF. OF GROUND COORDINATES
C        (B-SQUARE)              C(1) = C(1,1)
C                                C(2) = C(2,1)
C                                C(3) = C(1,2)
C                                    etc.
C
C     D = B-DOT-DOT-DOT       COEFF. OF ADDITIONAL PARAMETERS
C        (B-DIAMOND)             D(1) = D(1,1)
C                                D(2) = D(2,1)
C                                D(3) = D(1,2)
C                                    etc.
C
C     E                       CONSTANT TERMS (J, K, and AP's)
C     F                       FOCAL LENGTH
C     X,  Y                   IMAGE COORDINATES
C     XG, YG, ZG              GROUND COORDINATES
C     OMEGA, PHI, KAPPA       CAMERA ORIENTATION ROTATION ANGLES
C     XL, YL, ZL              CAMERA EXPOSURE STATION COORDINATES
C     NAPS                    NUMBER OF ADDITIONAL PARAMETERS
C     XO, YO                  PRINCIPAL POINT COORDINATES
C     DF                      CORRECTION TO THE FOCAL LENGTH
C     K1, K2, K3              COEFFICIENTS OF SYMMETRIC RADIAL
C                             DISTORTION
C     P1, P2                  COEFFICIENTS OF DECENTERING DISTORTION
```

```
C     A1, A2, A3, A4, B1,     COEFFICIENTS OF THE POLYNOMIALS WHICH
C     B2, B3, B4, B5, B6         DESCRIBE THE EMPIRICAL IMAGE DISTORTION
C                                DUE TO MECHANICAL, PHYSICAL, AND
C                                CHEMICAL FACTORS
C
C  SUBROUTINES INCLUDED -
C
C     ROTATE
C
C-----------------------------------------------------------------------

      SUBROUTINE COLLINAP (X,Y,XG,YG,ZG,OMEGA,PHI,KAPPA,XL,YL,ZL,
     $                     B,C,D,E,F,NAPS,XO,YO,DF,K1,K2,K3,P1,P2,
     $                     A1,A2,A3,A4,B1,B2,B3,B4,B5,B6)

      DOUBLE PRECISION X,Y,XG,YG,ZG,OMEGA,PHI,KAPPA,XL,YL,ZL
      DOUBLE PRECISION B(12),C(6),D(36),E(2),F,R(9)
      DOUBLE PRECISION XO,YO,DF,K1,K2,K3,P1,P2
      DOUBLE PRECISION A1,A2,A3,A4,B1,B2,B3,B4,B5,B6
      DOUBLE PRECISION SO,CO,SP,CP,SK,CK
      DOUBLE PRECISION XA,YA,RD,DELXC,DELYC,DELXD,DELYD,DELX,DELY
      DOUBLE PRECISION DX,DY,DZ,XQ,YQ,FQ

C  FILL THE ROTATION MATRIX

      CALL ROTATE (OMEGA,PHI,KAPPA,R,SO,CO,SP,CP,SK,CK)

C  ZERO AP'S NOT USED
      K1 = 0.0
      K2 = 0.0
      K3 = 0.0
      P1 = 0.0
      P2 = 0.0
      A1 = 0.0
      A2 = 0.0
      A3 = 0.0
      A4 = 0.0
      B1 = 0.0
      B2 = 0.0
      B3 = 0.0
      B4 = 0.0
      B5 = 0.0
      B6 = 0.0

C  ADDITIONAL PARAMETERS

      XA    =  X - XO
      YA    =  Y - YO
      RD    =  DSQRT(XA**2 + YA**2)
```

```
      DELXC = -XO + (-XA/F) * DF +
     1        XA * (K1*RD**2 + K2*RD**4 + K3*RD**6) +
     2        P1 * (3D0*XA**2 + YA**2) + 2D0*P2*XA*YA
      DELYC = -YO + (-YA/F) * DF +
     1        YA * (K1*RD**2 + K2*RD**4 + K3*RD**6) +
     2        2D0*P1*XA*YA + P2 * (XA**2 + 3D0*YA**2)
      DELXD =  A1*XA*YA + A2*YA**2 + A3*XA**2*YA + A4*XA*YA**2
      DELYD =  B1*XA + B2*YA + B3*XA*YA + B4*XA**2 + B5*XA**2*YA
     1         + B6*XA*YA**2
      DELX  =  DELXC + DELXD
      DELY  =  DELYC + DELYD

C  COMMON VALUES

      DX    = XG - XL
      DY    = YG - YL
      DZ    = ZG - ZL
      XQ    = ( X + DELX ) / (R(3)*DX + R(6)*DY + R(9)*DZ)
      YQ    = ( Y + DELY ) / (R(3)*DX + R(6)*DY + R(9)*DZ)
      FQ    =    ( F )     / (R(3)*DX + R(6)*DY + R(9)*DZ)

C  COEFFICIENTS OF CAMERA ORIENTATION - B(2,6) STORED COLUMNWISE

      B(1)  = XQ * (-DY*R(9) + DZ*R(6)) + FQ * (-DY*R(7) + DZ*R(4))
      B(2)  = YQ * (-DY*R(9) + DZ*R(6)) + FQ * (-DY*R(8) + DZ*R(5))
      B(3)  = XQ * ( DX*CP + DY*SO*SP - DZ*SP*CO) + FQ * (-DX*SP*CK +
     1               DY*SO*CP*CK - DZ*CO*CP*CK)
      B(4)  = YQ * ( DX*CP + DY*SO*SP - DZ*SP*CO) + FQ * ( DX*SP*SK -
     1               DY*SO*CP*SK + DZ*CO*CP*SK)
      B(5)  = FQ * ( DX*R(2) + DY*R(5) + DZ*R(8))
      B(6)  = FQ * (-DX*R(1) - DY*R(4) - DZ*R(7))
      B(7)  = -(XQ*R(3) + FQ*R(1))
      B(8)  = -(YQ*R(3) + FQ*R(2))
      B(9)  = -(XQ*R(6) + FQ*R(4))
      B(10) = -(YQ*R(6) + FQ*R(5))
      B(11) = -(XQ*R(9) + FQ*R(7))
      B(12) = -(YQ*R(9) + FQ*R(8))

C  COEFFICIENTS OF GROUND COORDINATES - C(2,3) STORED COLUMNWISE

      C(1)  = -B(7)
      C(2)  = -B(8)
      C(3)  = -B(9)
      C(4)  = -B(10)
      C(5)  = -B(11)
      C(6)  = -B(12)


C  COEFFICIENTS OF ADDITIONAL PARAMETERS - D(2,NAPS) STORED COLUMNWISE
```

```
      D(1)  = -1D0
      D(2)  =  0D0
      D(3)  =  0D0
      D(4)  = -1D0
      D(5)  = -XA / F
      D(6)  = -YA / F
C      D(7)  =  XA * RD**2
C      D(8)  =  YA * RD**2
C      D(9)  =  XA * RD**4
C      D(10) =  YA * RD**4
C      D(11) =  XA * RD**6
C      D(12) =  YA * RD**6
C      D(13) =  3D0 * XA**2 + YA**2
C      D(14) =  2D0 * XA * YA
C      D(15) =  2D0 * XA * YA
C      D(16) =  XA**2 + 3D0 * YA**2
C      D(17) =  XA * YA
C      D(18) =  0D0
C      D(19) =  YA**2
C      D(20) =  0D0
C      D(21) =  XA**2 * YA
C      D(22) =  0D0
C      D(23) =  XA * YA**2
C      D(24) =  0D0
C      D(25) =  0D0
C      D(26) =  XA
C      D(27) =  0D0
C      D(28) =  YA
C      D(29) =  0D0
C      D(30) =  XA * YA
C      D(31) =  0D0
C      D(32) =  XA**2
C      D(33) =  0D0
C      D(34) =  XA**2 * YA
C      D(35) =  0D0
C      D(36) =  XA * YA**2

C  THIS IS WHERE THE AP COEFFICIENTS ARE KEPT AT ZERO:

C      D(1)  =  0D0
C      D(2)  =  0D0
C      D(3)  =  0D0
C      D(4)  =  0D0
C      D(5)  =  0D0
C      D(6)  =  0D0
      D(7)  =  0D0
      D(8)  =  0D0
      D(9)  =  0D0
      D(10) =  0D0
      D(11) =  0D0
```

```
      D(12) =  0D0
      D(13) =  0D0
      D(14) =  0D0
      D(15) =  0D0
      D(16) =  0D0
      D(17) =  0D0
      D(18) =  0D0
      D(19) =  0D0
      D(20) =  0D0
      D(21) =  0D0
      D(22) =  0D0
      D(23) =  0D0
      D(24) =  0D0
      D(25) =  0D0
      D(26) =  0D0
      D(27) =  0D0
      D(28) =  0D0
      D(29) =  0D0
      D(30) =  0D0
      D(31) =  0D0
      D(32) =  0D0
      D(33) =  0D0
      D(34) =  0D0
      D(35) =  0D0
      D(36) =  0D0

C  CONSTANT TERMS

      E(1)  = -X - DELX - FQ * (DX*R(1) + DY*R(4) + DZ*R(7))
      E(2)  = -Y - DELY - FQ * (DX*R(2) + DY*R(5) + DZ*R(8))

      RETURN
      END
```

```
C*********************************************************************
C
C              P R O G R A M    D I G S E T U P
C
C  PURPOSE -
C
C     TRANSFORM THE DIGITIZED FILE INTO A WORKABLE DATA FILE THAT CAN
C     BE USED IN THE VAX BUNDLE ADJUSTMENT PROGRAM.
C
C---------------------------------------------------------------------

      PROGRAM DIGSETUP
      CHARACTER*64 FNAME, ONAME
      CHARACTER*4  PTNAME
      CHARACTER*2  SN, PN

      WRITE(*,900)
      READ(*,910)FNAME
      WRITE(*,905)
      READ(*,910)ONAME
      WRITE(*,*)
      OPEN(3,FILE=FNAME)
      OPEN(4,FILE=ONAME,STATUS='NEW')
      WRITE(*,920)
      READ(*,930)SN
      WRITE(*,940)
      READ(*,930)PN
      WRITE(*,*)
  100 READ(3,970,END=200)PTNAME,U,V
      WRITE(4,950)PTNAME,SN,PN,U,V
      GOTO 100
  200 WRITE(*,960)

  900 FORMAT(' INPUT FILE NAME [PHXX]: '\)
  905 FORMAT(' OUTPUT NAME [PHXX.DIG]: '\)
  910 FORMAT(A)
  920 FORMAT(' INPUT STRIP NUMBER [XX]: '\)
  930 FORMAT(A)
  940 FORMAT(' INPUT PHOTO NUMBER [XX]: '\)
  950 FORMAT(1X,A4,3X,A2,1X,'PH',A2,2F9.3)
  960 FORMAT(' COMPLETED')
  970 FORMAT(A4,11X,2F9.3)

      CLOSE(UNIT=3)
      CLOSE(UNIT=4)

      STOP
      END
```

```
C*********************************************************************
C
C              S U B R O U T I N E    R E D N O R M
C
C                   [ REDUCED NORMAL EQUATIONS ]
C
C     PURPOSE -
C
C          THIS SUBROUTINE COMPUTES THE X-MATRIX BY WAY OF THE
C          REDUCED NORMAL EQUATIONS:
C
C                                -1     -1                -1
C          X1 = [ N11 - N12 N22  N21 ]   [ T1 - N12 N22  T2 ]
C
C                  -1
C          X2 = N22   [ T2 - N21 X1 ]
C
C
C     VARIABLES -
C
C          NP - TOTAL NUMBER OF PHOTOGRAPHS
C          NG - TOTAL NUMBER OF GROUND POINTS
C          EN - THE NORMAL MATRIX (N)
C          ET - THE CONSTANT TERM VECTOR (T)
C          EX - THE CORRECTION VECTOR (X) OR (DELTA)
C
C*********************************************************************

      SUBROUTINE REDNORM (NP,NG,EN,ET,EX)

      IMPLICIT REAL*8 (A-H, O-Z)

      DIMENSION EN(660,660)
      DIMENSION EN11(60,60),  EN12(60,600)
      DIMENSION EN21(600,60), EN22(600,600)
      DIMENSION T1(60), T2(600), ET(660)
      DIMENSION X1(60), X2(600), EX(660)
      DIMENSION A(60,600), B(60,60)
      DIMENSION C(60), D(600)

C  VARIABLES

      NP6 = 6 * NP
      NG3 = 3 * NG
```

```
C  SET UP MATRICES

C  N11:
      DO 10  I = 1, NP6
      DO 10  J = 1, NP6
   10   EN11(I,J) = EN(I,J)

C  N12:
      DO 20  I = 1, NP6
      DO 20  J = 1, NG3
   20   EN12(I,J) = EN(I,NP6 + J)

C  N21:
      DO 30  I = 1, NG3
      DO 30  J = 1, NP6
   30   EN21(I,J) = EN(NP6 + I,J)

C  N22:
      DO 40  I = 1, NG3
      DO 40  J = 1, NG3
   40   EN22(I,J) = EN(NP6 + I,NP6 + J)

C  T1:
      DO 50  I = 1, NP6
   50   T1(I) = ET(I)

C  T2:
      DO 60  I = 1, NG3
   60   T2(I) = ET(NP6 + I)


C  CALCULATE THE X1 MATRIX:

      CALL MAINV (EN22,NG3,600)
      CALL MAMULT(EN12,NP6,NG3,60,EN22,NG3,NG3,600,A,60,-1,0)
      CALL MAMULT(A,   NP6,NG3,60,EN21,NG3,NP6,600,B,60,-1,0)
      DO 100  I = 1, NP6
      DO 100  J = 1, NP6
  100   B(I,J) = EN11(I,J) - B(I,J)
      CALL MAINV (B,NP6,60)
      CALL MAMULT(A,NP6,NG3,60,T2,NG3,1,600,C,60,-1,0)
      DO 110  I = 1, NP6
  110   C(I) = T1(I) - C(I)
      CALL MAMULT(B,NP6,NP6,60,C,NP6,1,60,X1,60,-1,0)
```

```
C  CALCULATE THE X2 MATRIX:

      CALL MAMULT(EN21,NG3,NP6,600,X1,NP6,1,60,D,600,-1,0)
      DO 120  I = 1, NG3
  120   D(I) = T2(I) - D(I)
      CALL MAMULT(EN22,NG3,NG3,600,D,NG3,1,600,X2,600,-1,0)


C  FILL THE X MATRIX:

      DO 130  I = 1, NP6
  130   EX(I) = X1(I)
      DO 140  I = 1, NG3
  140   EX(NP6 + I) = X2(I)

      RETURN
      END
```

B.3 Sample Runs and Data

Sample input and output listings from the Quattro and Nikon camera test data are included within this section. The Quattro data was generated from four photographs, eight target points, and a focal length of 50 mm. An initial false setting of f = 51 mm was loaded into the Quattro data to discover if the self-calibration parameters could recover the true focal length.

Four photographs, eight control points, and twenty-two pass points were selected from the Nikon test data. The information was loaded into data files along with initial estimates for focal length and principal point offset. The Quattro data is listed first and is followed by the Nikon data files.

Run and Data File Index

QUAT.DIG

1000	1	PH 1	-18.000	-12.000
2000	1	PH 1	18.000	-12.000
3000	1	PH 1	18.000	12.000
4000	1	PH 1	-18.000	12.000
P1	1	PH 1	-4.243	0.000
P2	1	PH 1	-4.821	-6.818
P3	1	PH 1	4.821	-6.818
P4	1	PH 1	4.243	0.000
P5	1	PH 1	-4.821	6.818
P6	1	PH 1	-5.582	0.000
P7	1	PH 1	5.582	0.000
P8	1	PH 1	4.821	6.818
1000	1	PH 2	-18.000	-12.000
2000	1	PH 2	18.000	-12.000
3000	1	PH 2	18.000	12.000
4000	1	PH 2	-18.000	12.000
P1	1	PH 2	8.891	-1.164
P2	1	PH 2	3.864	-7.165
P3	1	PH 2	11.692	-10.840
P4	1	PH 2	16.714	-3.805
P5	1	PH 2	6.992	5.395
P6	1	PH 2	1.152	-0.812
P7	1	PH 2	9.728	-4.054
P8	1	PH 2	15.607	3.317
1000	1	PH 3	-18.000	-12.000
2000	1	PH 3	18.000	-12.000
3000	1	PH 3	18.000	12.000
4000	1	PH 3	-18.000	12.000
P1	1	PH 3	4.243	0.000
P2	1	PH 3	-4.243	0.000
P3	1	PH 3	-4.821	-6.818
P4	1	PH 3	4.821	-6.818
P5	1	PH 3	4.821	6.818
P6	1	PH 3	-4.821	6.818
P7	1	PH 3	-5.582	0.000
P8	1	PH 3	5.582	0.000
1000	1	PH 4	-18.000	-12.000
2000	1	PH 4	18.000	-12.000
3000	1	PH 4	18.000	12.000
4000	1	PH 4	-18.000	12.000
P1	1	PH 4	0.000	-4.243
P2	1	PH 4	-6.818	-4.821
P3	1	PH 4	-0.000	-5.582
P4	1	PH 4	6.818	-4.821
P5	1	PH 4	0.000	4.243

```
P6     1 PH 4    -6.818     4.821
P7     1 PH 4    -0.000     5.582
P8     1 PH 4     6.818     4.821
```

QUAT.CTL

```
P1      0.00      0.00      0.00    3 0.01 0.01 0.01
P2     24.00      0.00      0.00    3 0.01 0.01 0.01
P3     24.00     24.00      0.00    3 0.01 0.01 0.01
P4      0.00     24.00      0.00    3 0.01 0.01 0.01
P5      0.00      0.00     24.00    3 0.01 0.01 0.01
P6     24.00      0.00     24.00    3 0.01 0.01 0.01
P7     24.00     24.00     24.00    3 0.01 0.01 0.01
P8      0.00     24.00     24.00    3 0.01 0.01 0.01
```

QUAT.POR

```
PPH01
  0.34900   0.34900   0.34900  20.00000  20.00000  20.00000
      0.000           0.785          1.571
    100.000          12.000        100.000 PPH02
  0.34900   0.34900   0.34900  20.00000  20.00000  20.00000
      2.339           2.705         -0.803
     74.000          74.000        100.000 PPH03
  0.34900   0.34900   0.34900  20.00000  20.00000  20.00000
      2.356           3.142          0.000
     12.000         100.000        100.000 PPH04
  0.34900   0.34900   0.34900  20.00000  20.00000  20.00000
      1.571           2.356          0.000
    100.000         100.000         12.000
```

QUAT.OUT

```
** A N A L Y T I C A L   A E R O T R I A N G U L A T I O N **

SIMULTANEOUS COLLINEARITY ADJUSTMENT OF THE FOLLOWING JOBS

     JOB                JOB IDENTIFICATION
       1                QUATTRO DATA -- F=50MM, XO=1, YO=1

     PHOTOS           POINTS
        4                8

WT. OMEGA,PHI,KAPPA =   0.100E+02     WT. XC,YC,ZC =   0.349E+00

SIMULTANEOUS COLLINEARITY ADJUSTMENT OF THE FOLLOWING PHOTOGRAPHS
PHOTO SEQUENCE IS ASSIGNED

                         NUMBER    INITIAL EXPOSURE STATION
APPROXIMATIONS
    STRIP      PHOTO    OF POINTS            XC          YC         ZC

    QUAT        PH01        8               88.0         0.0       88.0
    QUAT        PH02        8               62.0        62.0       88.0
    QUAT        PH03        8                0.0        88.0       88.0
    QUAT        PH04        8               88.0        88.0        0.0

         NUMBER OF PHOTOGRAPHS ADJUSTED       4
         NUMBER OF GROUND POINTS       8

         BANDWIDTH IS  4 PHOTOGRAPHS

    VALUES AS THEY ENTER THE ADDITIONAL PARAMETER BUNDLE ADJUSTMENT

              FOCAL LENGTH [F] =     51.00000

              CORRECTIONS TO THE PRINCIPAL POINT OFFSET:
              XO =       0.00000
              YO =       0.00000

    VALUES AS THEY LEAVE THE ADDITIONAL PARAMETER BUNDLE ADJUSTMENT

              FOCAL LENGTH [F] =     50.00168
              CORRECTION [DF]  =     -0.99832

              CORRECTIONS TO THE PRINCIPAL POINT OFFSET:
              XO =      -0.99656
              YO =      -0.99447

    ITERATIONS REQUIRED   3
```

PHOTOGRAPH NUMBER PH01 STRIP QUAT FOCAL LENGTH = 51.000

CAMERA EXPOSURE STATION

COORDINATES

X	Y	Z
100.04	12.00	100.04

ORIENTATION

OMEGA	PHI	KAPPA
0 /	0 /	0 /
0 0.33	45 0.38	89 59.77

IMAGE POINTS

POINT	REFINED COORDINATES X	VX	Y	VY	A-PRIORI STD. DEV. X	Y
P1	-5.243	0.000	-1.000	0.000	0.003	0.003
P2	-5.821	0.000	-7.818	0.000	0.003	0.003
P3	3.821	0.000	-7.818	0.000	0.003	0.003
P4	3.243	0.000	-1.000	0.000	0.003	0.003
P5	-5.821	0.000	5.818	0.000	0.003	0.003
P6	-6.582	0.000	-1.000	0.000	0.003	0.003
P7	4.582	0.000	-1.000	0.000	0.003	0.003
P8	3.821	0.000	5.818	0.000	0.003	0.003

PHOTOGRAPH NUMBER PH02 STRIP QUAT FOCAL LENGTH = 51.000

CAMERA EXPOSURE STATION

COORDINATES

X	Y	Z
74.02	74.02	100.03

ORIENTATION

OMEGA	PHI	KAPPA
0 /	0 /	0 /
134 0.15	154 59.46	-46 0.02

IMAGE POINTS

POINT	REFINED COORDINATES X	VX	Y	VY	A-PRIORI STD. DEV. X	Y
P1	7.891	0.000	-2.164	0.000	0.003	0.003
P2	2.864	0.000	-8.165	-0.001	0.003	0.003
P3	10.692	0.000	-11.840	0.000	0.003	0.003
P4	15.714	0.000	-4.805	0.000	0.003	0.003
P5	5.992	0.000	4.395	0.000	0.003	0.003
P6	0.152	0.000	-1.812	0.000	0.003	0.003
P7	8.728	0.000	-5.054	0.000	0.003	0.003
P8	14.607	0.000	2.317	0.000	0.003	0.003

PHOTOGRAPH NUMBER PH03 STRIP QUAT FOCAL LENGTH = 51.000

CAMERA EXPOSURE STATION

COORDINATES

X	Y	Z
12.00	100.04	100.04

ORIENTATION

OMEGA	PHI	KAPPA
0 /	0 /	0 /
134 59.63	179 59.77	0 0.00

IMAGE POINTS

	REFINED COORDINATES				A-PRIORI STD. DEV.	
POINT	X	VX	Y	VY	X	Y
P1	3.243	0.000	-1.000	0.000	0.003	0.003
P2	-5.243	0.000	-1.000	0.000	0.003	0.003
P3	-5.821	0.000	-7.818	0.000	0.003	0.003
P4	3.821	0.000	-7.818	0.000	0.003	0.003
P5	3.821	0.000	5.818	0.000	0.003	0.003
P6	-5.821	0.000	5.818	0.000	0.003	0.003
P7	-6.582	0.000	-1.000	0.000	0.003	0.003
P8	4.582	0.000	-1.000	0.000	0.003	0.003

PHOTOGRAPH NUMBER PH04 STRIP QUAT FOCAL LENGTH = 51.000

CAMERA EXPOSURE STATION

COORDINATES

X	Y	Z
100.04	100.04	12.00

ORIENTATION

OMEGA	PHI	KAPPA
0 /	0 /	0 /
89 59.48	134 59.77	0 0.37

IMAGE POINTS

	REFINED COORDINATES				A-PRIORI STD. DEV.	
POINT	X	VX	Y	VY	X	Y
P1	-1.000	0.000	-5.243	0.000	0.003	0.003
P2	-7.818	0.000	-5.821	0.000	0.003	0.003
P3	-1.000	0.000	-6.582	0.000	0.003	0.003
P4	5.818	0.000	-5.821	0.000	0.003	0.003
P5	-1.000	0.000	3.243	0.000	0.003	0.003
P6	-7.818	0.000	3.821	0.000	0.003	0.003
P7	-1.000	0.000	4.582	0.000	0.003	0.003
P8	5.818	0.000	3.821	0.000	0.003	0.003

SIMULTANEOUS COLLINEARITY ADJUSTMENT

4 PHOTOGRAPHS, 8 GROUND POINTS, 32 IMAGE POINTS

STANDARD DEVIATION OF UNIT WEIGHT = 0.1601E-03 MM
DEGREES OF FREEDOM = 64

GROUND POINTS

	ADJUSTED COORDINATE			TOTAL CORRECTION			A-PRIORI STD. DEVIATION		
NAME	X	Y	Z	CX	CY	CZ	X	Y	Z
P1	0.00	0.00	0.00	-0.0003	-0.0005	-0.0004	0.01	0.01	0.01
P2	24.00	0.00	0.00	-0.0004	0.0004	0.0004	0.01	0.01	0.01
P3	24.00	24.00	0.00	0.0000	-0.0004	-0.0001	0.01	0.01	0.01
P4	0.00	24.00	0.00	0.0005	0.0002	0.0000	0.01	0.01	0.01
P5	0.00	0.00	24.00	0.0004	0.0001	0.0000	0.01	0.01	0.01
P6	24.00	0.00	24.00	0.0002	-0.0001	-0.0002	0.01	0.01	0.01
P7	24.00	24.00	24.00	0.0001	0.0002	0.0001	0.01	0.01	0.01
P8	0.00	24.00	24.00	-0.0005	0.0001	0.0002	0.01	0.01	0.01

NIKN.DIG

1000	01	PH01	1.588	2.798
2000	01	PH01	10.951	2.732
3000	01	PH01	10.981	8.980
4000	01	PH01	1.654	9.052
P01	01	PH01	4.594	5.387
P02	01	PH01	4.750	4.492
P05	01	PH01	5.309	5.150
P06	01	PH01	5.367	4.858
P07	01	PH01	6.231	5.392
P08	01	PH01	6.214	4.328
P09	01	PH01	6.950	5.387
P10	01	PH01	6.951	4.324
P11	01	PH01	6.585	5.037
P12	01	PH01	6.583	4.679
P13	01	PH01	7.168	7.543
P15	01	PH01	7.149	6.222
P16	01	PH01	7.414	7.518
P18	01	PH01	7.385	6.172
P19	01	PH01	7.699	7.186
P20	01	PH01	7.675	6.514
P21	01	PH01	7.935	7.207
P22	01	PH01	7.910	6.542
P33	01	PH01	5.197	6.993
P36	01	PH01	5.210	6.031
P37	01	PH01	5.485	6.997
P40	01	PH01	5.492	6.040
P41	01	PH01	3.476	4.367
P42	01	PH01	4.174	4.564
P46	01	PH01	8.370	4.557
P47	01	PH01	9.071	4.365
P50	01	PH01	6.268	8.485
P56	01	PH01	6.305	3.226
P58	01	PH01	3.237	8.411
P59	01	PH01	9.329	8.372
1000	01	PH02	2.297	1.992
2000	01	PH02	11.717	2.107
3000	01	PH02	11.634	8.383
4000	01	PH02	2.256	8.291
P01	01	PH02	5.292	4.096
P02	01	PH02	5.964	3.254
P05	01	PH02	5.895	4.124
P06	01	PH02	6.109	3.859
P07	01	PH02	7.124	4.583
P08	01	PH02	7.489	3.623
P09	01	PH02	7.618	4.801
P10	01	PH02	7.972	3.872
P11	01	PH02	7.490	4.379

P12	01	PH02	7.608	4.064
P13	01	PH02	6.927	6.940
P15	01	PH02	6.935	5.719
P16	01	PH02	7.258	6.933
P18	01	PH02	7.254	5.710
P33	01	PH02	5.191	5.953
P36	01	PH02	5.252	5.003
P41	01	PH02	4.784	2.581
P42	01	PH02	4.921	3.126
P46	01	PH02	7.915	4.602
P47	01	PH02	8.641	4.597
P50	01	PH02	5.070	7.930
P56	01	PH02	9.126	2.614
P58	01	PH02	4.335	6.727
P59	01	PH02	8.815	7.944
1000	01	PH03	2.869	1.795
2000	01	PH03	12.281	1.833
3000	01	PH03	12.237	8.100
4000	01	PH03	2.874	8.080
P01	01	PH03	6.137	4.759
P02	01	PH03	6.326	3.896
P05	01	PH03	6.791	4.563
P06	01	PH03	6.859	4.280
P07	01	PH03	7.659	4.629
P08	01	PH03	7.663	3.659
P09	01	PH03	8.310	4.629
P10	01	PH03	8.320	3.661
P11	01	PH03	7.987	4.315
P12	01	PH03	7.988	3.994
P13	01	PH03	8.497	6.751
P15	01	PH03	8.464	5.582
P16	01	PH03	8.731	6.683
P18	01	PH03	8.687	5.501
P19	01	PH03	8.997	6.392
P20	01	PH03	8.964	5.784
P21	01	PH03	9.211	6.452
P22	01	PH03	9.172	5.860
P33	01	PH03	6.635	6.300
P36	01	PH03	6.660	5.454
P37	01	PH03	6.907	6.319
P40	01	PH03	6.924	5.470
P41	01	PH03	5.171	3.802
P42	01	PH03	5.767	4.075
P46	01	PH03	9.547	4.135
P47	01	PH03	10.177	3.881
P50	01	PH03	7.592	7.942
P56	01	PH03	7.828	2.342
P58	01	PH03	4.813	7.309
P59	01	PH03	10.555	7.346

1000	01	PH04	2.791	1.799
2000	01	PH04	12.210	1.795
3000	01	PH04	12.197	8.068
4000	01	PH04	2.805	8.091
P01	01	PH04	6.296	4.818
P02	01	PH04	6.235	3.970
P05	01	PH04	6.875	4.525
P06	01	PH04	6.856	4.240
P07	01	PH04	7.422	4.475
P08	01	PH04	7.239	3.510
P09	01	PH04	8.033	4.363
P10	01	PH04	7.851	3.381
P11	01	PH04	7.664	4.099
P12	01	PH04	7.602	3.774
P13	01	PH04	8.669	6.469
P15	01	PH04	8.618	5.275
P16	01	PH04	8.821	6.376
P18	01	PH04	8.760	5.150
P19	01	PH04	9.073	6.033
P20	01	PH04	9.028	5.419
P21	01	PH04	9.372	6.066
P22	01	PH04	9.319	5.452
P33	01	PH04	6.996	6.234
P36	01	PH04	6.998	5.405
P37	01	PH04	7.260	6.216
P40	01	PH04	7.257	5.382
P41	01	PH04	5.287	4.072
P42	01	PH04	5.978	4.216
P46	01	PH04	9.606	3.585
P47	01	PH04	10.066	3.197
P50	01	PH04	8.351	7.737
P56	01	PH04	6.556	2.241
P58	01	PH04	5.021	7.424
P59	01	PH04	10.511	6.860

NIKN.CTL

P01	16.50	2.10	5.40	3	1.00	1.00	1.00
P02	18.70	6.00	1.20	3	1.00	1.00	1.00
P05	13.00	5.00	4.00	3	1.00	1.00	1.00
P06	14.00	6.50	2.50	3	1.00	1.00	1.00
P07	13.00	12.50	7.00	3	1.00	1.00	1.00
P08	15.50	14.50	1.90	3	1.00	1.00	1.00
P09	10.20	15.80	7.00	3	1.00	1.00	1.00
P10	12.70	17.70	1.90	3	1.00	1.00	1.00
P11	12.50	15.00	5.00	3	1.00	1.00	1.00
P12	13.10	15.50	3.50	3	1.00	1.00	1.00
P13	3.90	11.40	18.00	3	1.00	1.00	1.00
P15	3.90	11.40	10.00	3	1.00	1.00	1.00

```
P16      4.00     12.40     18.00    3 1.00 1.00 1.00
P18      4.00     12.40     10.00    3 1.00 1.00 1.00
P19      3.50     14.60     16.10    3 1.00 1.00 1.00
P20      3.60     14.60     12.10    3 1.00 1.00 1.00
P21      1.30     15.00     16.10    3 1.00 1.00 1.00
P22      1.40     15.00     12.10    3 1.00 1.00 1.00
P33     11.00      1.40     14.40    3 1.00 1.00 1.00
P36     11.00      1.40      8.40    3 1.00 1.00 1.00
P37      9.40      2.20     14.40    3 1.00 1.00 1.00
P40      9.40      2.20      8.40    3 1.00 1.00 1.00
P41     23.00      0.00      0.00    3 0.04 0.04 0.04
P42     18.00      0.00      0.00    3 0.04 0.04 0.04
P46      0.00     18.00      0.00    3 0.04 0.04 0.04
P47      0.00     23.00      0.00    3 0.04 0.04 0.04
P50      0.00      0.00     23.00    3 0.04 0.04 0.04
P56     23.00     23.00      0.00    3 0.04 0.04 0.04
P58     23.00      0.00     23.00    3 1.00 1.00 0.04
P59      0.00     23.00     23.00    3 1.00 1.00 0.04


NIKN.POR

PPH01
  0.34900   0.34900   0.34900  20.00000  20.00000  20.00000
      1.745           2.356         -0.175
     68.000          67.000         25.500 PPH02
  0.34900   0.34900   0.34900  20.00000  20.00000  20.00000
      0.000           1.222          1.571
     88.000           9.000         43.500 PPH03
  0.34900   0.34900   0.34900  20.00000  20.00000  20.00000
      1.920           2.356         -0.349
     72.000          65.000         43.500 PPH04
  0.34900   0.34900   0.34900  20.00000  20.00000  20.00000
      1.920           2.740         -0.349
     48.000          84.000         43.500
```

NIKN.OUT

```
** A N A L Y T I C A L   A E R O T R I A N G U L A T I O N **

SIMULTANEOUS COLLINEARITY ADJUSTMENT OF THE FOLLOWING JOBS

JOB                JOB IDENTIFICATION
 1                NIKON PHOTOS - PL CASE

PHOTOS     POINTS
   4         30

WT. OMEGA,PHI,KAPPA =   0.349E+00     WT. XC,YC,ZC =   0.200E+02

SIMULTANEOUS COLLINEARITY ADJUSTMENT OF THE FOLLOWING PHOTOGRAPHS

PHOTO SEQUENCE ACCORDING TO STRIP

                          NUMBER    INITIAL EXPOSURE STATION
APPROXIMATIONS
STRIP      PHOTO    OF POINTS            XC          YC         ZC

NIKO        PH01        30               58.2        56.6       16.6
NIKO        PH02        24               78.2        -1.4       34.6
NIKO        PH03        30               62.2        54.6       34.6
NIKO        PH04        30               38.2        73.6       34.6

NUMBER OF PHOTOGRAPHS ADJUSTED       4
NUMBER OF GROUND POINTS      30

BANDWIDTH IS  4 PHOTOGRAPHS

VALUES AS THEY ENTER THE ADDITIONAL PARAMETER BUNDLE ADJUSTMENT

     FOCAL LENGTH [F] =     52.00000

     CORRECTIONS TO THE PRINCIPAL POINT OFFSET:
          XO =      0.00000
          YO =      0.00000

VALUES AS THEY LEAVE THE ADDITIONAL PARAMETER BUNDLE ADJUSTMENT

     FOCAL LENGTH [F] =     51.97051
     CORRECTION [DF]  =     -0.02949

     CORRECTIONS TO THE PRINCIPAL POINT OFFSET:
          XO =      0.00397
          YO =      0.02760

ITERATIONS REQUIRED   4
```

PHOTOGRAPH NUMBER PH01 STRIP NIKO FOCAL LENGTH = 52.000

CAMERA EXPOSURE STATION

COORDINATES		
X	Y	Z
64.58	63.65	25.62

ORIENTATION		
OMEGA	PHI	KAPPA
° ′	° ′	° ′
107 26.03	135 22.50	-12 39.96

IMAGE POINTS

POINT	REFINED COORDINATES X	VX	Y	VY	A-PRIORI STD. DEV. X	Y
P01	-6.915	0.008	-2.196	0.004	0.050	0.050
P02	-6.277	-0.005	-5.647	0.010	0.050	0.050
P05	-4.144	-0.003	-3.085	-0.003	0.050	0.050
P06	-3.908	-0.004	-4.210	0.001	0.050	0.050
P07	-0.592	0.001	-2.115	-0.008	0.050	0.050
P08	-0.616	0.008	-6.225	0.013	0.050	0.050
P09	2.186	-0.001	-2.108	-0.004	0.050	0.050
P10	2.231	0.010	-6.212	0.014	0.050	0.050
P11	0.790	0.007	-3.473	0.018	0.050	0.050
P12	0.796	0.005	-4.855	0.035	0.050	0.050
P13	2.944	0.000	6.226	-0.002	0.050	0.050
P15	2.922	-0.004	1.124	0.001	0.050	0.050
P16	3.896	-0.002	6.139	-0.001	0.050	0.050
P18	3.836	0.003	0.940	-0.003	0.050	0.050
P19	5.009	0.005	4.868	0.010	0.050	0.050
P20	4.943	0.011	2.272	-0.005	0.050	0.050
P21	5.920	0.006	4.958	0.005	0.050	0.050
P22	5.849	0.002	2.389	0.002	0.050	0.050
P33	-4.648	0.004	4.028	-0.006	0.050	0.050
P36	-4.560	-0.001	0.314	0.014	0.050	0.050
P37	-3.535	0.007	4.054	-0.011	0.050	0.050
P40	-3.471	0.007	0.359	-0.007	0.050	0.050
P41	-11.194	-0.023	-6.177	0.000	0.050	0.050
P42	-8.505	-0.010	-5.390	-0.010	0.050	0.050
P46	7.703	-0.012	-5.259	0.004	0.050	0.050
P47	10.418	-0.011	-5.974	-0.004	0.050	0.050
P50	-0.569	0.010	9.830	-0.022	0.050	0.050
P56	-0.222	-0.004	-10.477	-0.038	0.050	0.050
P58	-12.274	-0.003	9.430	-0.011	0.050	0.050
P59	11.260	-0.008	9.509	0.006	0.050	0.050

PHOTOGRAPH NUMBER PH02 STRIP NIKO FOCAL LENGTH = 52.000

CAMERA EXPOSURE STATION

COORDINATES		
X	Y	Z
82.39	11.69	42.69

ORIENTATION		
OMEGA	PHI	KAPPA
° ′	° ′	° ′
0 51.99	65 20.95	89 30.84

IMAGE POINTS

	REFINED COORDINATES				A-PRIORI STD. DEV.	
POINT	X	VX	Y	VY	X	Y
P01	-6.868	0.003	-4.345	-0.031	0.050	0.050
P02	-4.312	0.000	-7.599	0.007	0.050	0.050
P05	-4.552	0.000	-4.257	-0.011	0.050	0.050
P06	-3.738	0.006	-5.281	-0.012	0.050	0.050
P07	0.181	-0.001	-2.536	0.007	0.050	0.050
P08	1.555	-0.005	-6.233	-0.013	0.050	0.050
P09	2.085	0.003	-1.715	-0.003	0.050	0.050
P10	3.418	0.000	-5.293	-0.023	0.050	0.050
P11	1.581	-0.003	-3.331	-0.004	0.050	0.050
P12	2.025	-0.006	-4.544	-0.013	0.050	0.050
P13	-0.507	0.003	6.519	-0.010	0.050	0.050
P15	-0.512	0.004	1.832	-0.005	0.050	0.050
P16	0.764	-0.005	6.482	0.001	0.050	0.050
P18	0.713	-0.004	1.787	-0.004	0.050	0.050
P33	-7.203	-0.002	2.788	-0.011	0.050	0.050
P36	-6.996	-0.002	-0.861	-0.016	0.050	0.050
P41	-8.863	0.016	-10.144	0.046	0.050	0.050
P42	-8.321	-0.008	-8.056	-0.007	0.050	0.050
P46	3.220	-0.016	-2.489	0.013	0.050	0.050
P47	6.008	-0.003	-2.532	0.032	0.050	0.050
P50	-7.611	0.013	10.382	-0.005	0.050	0.050
P56	7.813	-0.006	-10.161	0.001	0.050	0.050
P58	-10.468	-0.002	5.788	0.023	0.050	0.050
P59	6.772	0.012	10.311	0.034	0.050	0.050

PHOTOGRAPH NUMBER PH03 STRIP NIKO FOCAL LENGTH = 52.000

CAMERA EXPOSURE STATION

COORDINATES

X	Y	Z
68.13	62.83	43.61

ORIENTATION

OMEGA	PHI	KAPPA
0 /	0 /	0 /
124 24.37	137 51.59	-24 19.68

IMAGE POINTS

POINT	REFINED COORDINATES X	VX	Y	VY	A-PRIORI STD. DEV. X	Y
P01	-5.862	0.004	-0.926	0.012	0.050	0.050
P02	-5.138	-0.006	-4.246	-0.011	0.050	0.050
P05	-3.348	0.007	-1.682	0.010	0.050	0.050
P06	-3.087	-0.006	-2.771	0.005	0.050	0.050
P07	-0.010	0.004	-1.431	0.017	0.050	0.050
P08	0.003	0.008	-5.162	0.000	0.050	0.050
P09	2.494	0.001	-1.432	0.018	0.050	0.050
P10	2.529	0.002	-5.156	-0.002	0.050	0.050
P11	1.251	-0.003	-2.639	-0.010	0.050	0.050
P12	1.253	0.000	-3.874	-0.025	0.050	0.050
P13	3.219	-0.001	6.729	0.012	0.050	0.050
P15	3.088	-0.003	2.233	0.011	0.050	0.050
P16	4.118	0.006	6.467	0.007	0.050	0.050
P18	3.946	0.002	1.921	-0.013	0.050	0.050
P19	5.140	-0.008	5.347	-0.013	0.050	0.050
P20	5.012	-0.006	3.008	0.020	0.050	0.050
P21	5.963	-0.005	5.577	0.000	0.050	0.050
P22	5.812	0.001	3.300	-0.001	0.050	0.050
P33	-3.943	0.013	4.999	0.006	0.050	0.050
P36	-3.849	0.006	1.745	0.008	0.050	0.050
P37	-2.897	-0.001	5.072	-0.002	0.050	0.050
P40	-2.834	-0.005	1.806	0.011	0.050	0.050
P41	-9.580	-0.014	-4.605	-0.024	0.050	0.050
P42	-7.287	-0.007	-3.556	-0.012	0.050	0.050
P46	7.249	-0.001	-3.336	-0.004	0.050	0.050
P47	9.671	-0.005	-4.315	0.003	0.050	0.050
P50	-0.258	0.023	11.313	-0.010	0.050	0.050
P56	0.633	0.000	-10.228	0.004	0.050	0.050
P58	-10.947	0.001	8.885	-0.012	0.050	0.050
P59	11.134	-0.005	9.012	-0.006	0.050	0.050

PHOTOGRAPH NUMBER PH04 STRIP NIKO FOCAL LENGTH = 52.000

CAMERA EXPOSURE STATION

COORDINATES

X	Y	Z
45.05	79.69	43.64

ORIENTATION

OMEGA	PHI	KAPPA
° ′	° ′	° ′
116 40.26	156 5.61	-10 59.51

IMAGE POINTS

POINT	REFINED COORDINATES X	VX	Y	VY	A-PRIORI STD. DEV. X	Y
P01	-4.992	-0.002	-0.668	0.019	0.050	0.050
P02	-5.219	0.006	-3.927	-0.010	0.050	0.050
P05	-2.767	0.002	-1.785	0.005	0.050	0.050
P06	-2.838	0.012	-2.880	0.007	0.050	0.050
P07	-0.667	-0.010	-1.969	-0.013	0.050	0.050
P08	-1.361	-0.011	-5.680	0.000	0.050	0.050
P09	1.679	-0.002	-2.391	-0.009	0.050	0.050
P10	0.989	-0.004	-6.166	0.011	0.050	0.050
P11	0.265	-0.002	-3.410	-0.008	0.050	0.050
P12	0.030	0.004	-4.660	-0.002	0.050	0.050
P13	4.100	0.002	5.711	0.001	0.050	0.050
P15	3.916	0.005	1.122	-0.006	0.050	0.050
P16	4.684	-0.004	5.356	-0.007	0.050	0.050
P18	4.462	-0.001	0.644	0.020	0.050	0.050
P19	5.655	0.001	4.042	0.002	0.050	0.050
P20	5.488	-0.009	1.682	-0.012	0.050	0.050
P21	6.802	-0.002	4.173	-0.004	0.050	0.050
P22	6.604	-0.003	1.813	-0.001	0.050	0.050
P33	-2.319	-0.012	4.783	0.015	0.050	0.050
P36	-2.304	0.000	1.598	-0.004	0.050	0.050
P37	-1.306	-0.005	4.718	0.015	0.050	0.050
P40	-1.309	-0.004	1.513	-0.003	0.050	0.050
P41	-8.858	-0.016	-3.549	-0.008	0.050	0.050
P42	-6.207	0.006	-2.985	-0.004	0.050	0.050
P46	7.723	0.007	-5.357	-0.027	0.050	0.050
P47	9.493	0.007	-6.841	0.007	0.050	0.050
P50	2.868	0.019	10.578	0.009	0.050	0.050
P56	-3.970	0.016	-10.566	0.023	0.050	0.050
P58	-9.911	-0.003	9.327	-0.017	0.050	0.050
P59	11.166	0.001	7.240	0.000	0.050	0.050

SIMULTANEOUS COLLINEARITY ADJUSTMENT

4 PHOTOGRAPHS, 30 GROUND POINTS, 114 IMAGE POINTS

STANDARD DEVIATION OF UNIT WEIGHT = 0.1085E-01 MM
DEGREES OF FREEDOM = 228

GROUND POINTS

	ADJUSTED COORDINATE			TOTAL CORRECTION			A-PRIORI STD. DEVIATION		
NAME	X	Y	Z	CX	CY	CZ	X	Y	Z
P01	16.34	2.21	5.28	-0.1610	0.1079	-0.1177	1.00	1.00	1.00
P02	18.33	5.95	1.07	-0.3747	-0.0517	-0.1269	1.00	1.00	1.00
P05	13.47	5.31	3.86	0.4722	0.3114	-0.1355	1.00	1.00	1.00
P06	14.15	6.56	2.47	0.1468	0.0646	-0.0264	1.00	1.00	1.00
P07	12.89	12.47	6.57	-0.1088	-0.0337	-0.4296	1.00	1.00	1.00
P08	15.10	14.56	1.42	-0.4016	0.0642	-0.4826	1.00	1.00	1.00
P09	10.21	15.45	6.61	0.0078	-0.3545	-0.3911	1.00	1.00	1.00
P10	12.42	17.55	1.47	-0.2831	-0.1510	-0.4291	1.00	1.00	1.00
P11	12.26	14.62	4.87	-0.2366	-0.3759	-0.1323	1.00	1.00	1.00
P12	12.99	15.31	3.14	-0.1082	-0.1874	-0.3588	1.00	1.00	1.00
P13	3.93	11.35	17.89	0.0333	-0.0509	-0.1086	1.00	1.00	1.00
P15	3.92	11.37	9.92	0.0192	-0.0301	-0.0824	1.00	1.00	1.00
P16	4.04	13.33	17.90	0.0439	0.9318	-0.1036	1.00	1.00	1.00
P18	4.06	13.36	9.91	0.0580	0.9594	-0.0910	1.00	1.00	1.00
P19	2.96	14.66	16.00	-0.5376	0.0610	-0.0986	1.00	1.00	1.00
P20	3.09	14.73	12.02	-0.5089	0.1299	-0.0778	1.00	1.00	1.00
P21	0.95	14.84	15.97	-0.3473	-0.1577	-0.1347	1.00	1.00	1.00
P22	1.07	14.89	11.98	-0.3288	-0.1097	-0.1218	1.00	1.00	1.00
P33	10.85	1.50	14.27	-0.1501	0.0960	-0.1258	1.00	1.00	1.00
P36	10.87	1.51	8.29	-0.1292	0.1132	-0.1056	1.00	1.00	1.00
P37	9.37	2.48	14.25	-0.0338	0.2837	-0.1502	1.00	1.00	1.00
P40	9.40	2.51	8.25	-0.0049	0.3070	-0.1497	1.00	1.00	1.00
P41	22.99	0.00	-0.01	-0.0084	-0.0010	-0.0079	0.04	0.04	0.04
P42	17.99	0.00	0.01	-0.0080	0.0037	0.0113	0.04	0.04	0.04
P46	0.00	18.00	0.01	-0.0008	0.0037	0.0051	0.04	0.04	0.04
P47	0.00	23.01	-0.01	0.0050	0.0065	-0.0122	0.04	0.04	0.04
P50	0.01	-0.02	23.01	0.0143	-0.0175	0.0103	0.04	0.04	0.04
P56	23.00	23.00	0.01	0.0033	0.0023	0.0084	0.04	0.04	0.04
P58	23.09	-0.46	23.00	0.0884	-0.4601	0.0047	1.00	1.00	0.04
P59	-0.50	23.04	22.99	-0.5021	0.0369	-0.0133	1.00	1.00	0.04

BIBLIOGRAPHY

Adams, L. P. "The Use of Non-Metric Cameras in Short-Range Photogrammetry". Photogrammetria. XXXVI, No. 2, March, 1981.

American Society of Photogrammetry. Close-Range Photogrammetry & Surveying: State-of-the-Art. ASP, Falls Church, Virginia, 1985.

American Society of Photogrammetry. Manual of Photogrammetry. 4th ed., ASP, Falls Church, Virginia, 1980.

Apostolos, J. A.; Mann, G. W. "Pavement Texture Evaluation by Photogrammetric Techniques". Close-Range Photogrammetry & Surveying: State-of-the-Art. ASP, Falls Church, Virginia, 1985.

Bhatti, M. S. "The Determination of Interior Orientation Elements of Close Range Cameras Without Control Points". Photogrammetric Record. VII, No. 42, October, 1973.

Bopp, H.; Krauss, H. "An Orientation and Calibration method for Non-Topographic Applications". Photogrammetric Engineering and Remote Sensing. XLIV, No. 9, September, 1978.

Brown, D. C. "Close-Range Camera Calibration". Photogrammetric Engineering and Remote Sensing. XXXVII, No. 855, August, 1971.

Clayton, R. "Photogrammetry in the Range 300 mm to 3000 mm: Techniques and Applications in the Electricity Supply Industry". Photogrammetric Record. XIII, No. 73, April, 1989.

Curry, S.; et al. "Calibration of Extreme Close-Range Stereometric Cameras". Technical Papers of the American Society of Photogrammetry. February, 1981.

Dauphin, E.; Hallert, B. "Calibration of Photographs From the WILD P32 Terrestrial Survey Camera (Prototype)". Proceedings of the Symposium on Close-Range Photogrammetry, Urbana, Illinois, 1971.

Faig, I. W. "Calibration of Close-Range Photogrammetric Cameras". Proceedings of the Symposium on Close-Range Photogrammetry, Urbana, Illinois, 1971.

Faig, I. W. "Calibration of Close-Range Photogrammetric Systems: Mathematical Formulation". Photogrammetric Engineering and Remote Sensing. XLI, No. 12, December, 1975.

Fraser, C. S. "Multiple Focal Setting Self-Calibration of Close-Range Metric Cameras". Photogrammetric Engineering and Remote Sensing. XLIX, No. 9, September, 1982.

Fraser, C. S. "On the Use of Nonmetric Cameras in Analytical Close-Range Photogrammetry". The Canadian Surveyor. XXXVI, No. 3, September, 1982.

Fraser, C. S. "Optimization of Precision in Close-Range Photogrammetry". Technical Papers of the American Society of Photogrammetry. March, 1982.

Fraser, C. S.; Veress, S. A. "Self-Calibration of a Fixed-Frame Multiple-Camera System". Photogrammetric Engineering and Remote Sensing. XLVI, No. 11, November, 1980.

Fryer, J. G.; Mason, S. O. "Rapid Lens Calibration of a Video Camera". Photogrammetric Engineering and Remote Sensing. LV, No. 4, April, 1989.

Harley, I. A. "The Calibration of Cameras for Non-Topographical Photogrammetry". Paper presented at the Symposium of the International Society of Photogrammetry. V, October, 1966.

Johnson, S. D. "Evaluation of Controlling Low Altitude Aerial Photography Using High Altitude Aerotriangulation". Thesis submitted in partial fulfillment of the requirements for the degree of Doctor of Philosophy. University of Wisconsin, Madison, 1982.

Karara, H. M.; Faig, I. W. "An Exposé on Photographic Data Acquisition Systems in Close-Range Photogrammetry". International Archives of Photogrammetry. V, 1980.

Klimavicz, J. F. "Geometric Modeling of Conventional Terrestrial Video Imagery". Report submitted to the Graduate Faculty of the Virginia Polytechnic Institute and State University in partial fulfillment for the degree of Master of Engineering. V.P.I. & S.U., Blacksburg, Virginia, 1988.

Mikhail, E. M. Observations and Least Squares. New York: University Press of America, 1976.

Moffitt, F. H.; Mikhail, E. M. Photogrammetry. New York: Harper & Row, 1980.

Muessig, H. "Equipment for Close-Range Photogrammetry". Technical Papers of the American Society of Photogrammetry. March, 1982.

Murai, S.; et al. "Analytical Orientation for Non-Metric Camera in the Application to Terrestrial Photogrammetry". International Archives of Photogrammetry. V, 1980.

Wolf, P. R. Elements of Photogrammetry. New York: McGraw-Hill, 1983.

Zeimann, H. "A Mathematical Model for the Comparison of Camera Calibration Procedures". Technical Papers of the American Society of Photogrammetry. March, 1982.

VITA

Barrington Long was born June 22, 1961 in Santa Monica, California. After his graduation from McLean High School in McLean, Virginia, he served a two year active enlistment in the United States Army. He was stationed in Ettlingen, West Germany as a 12B10 Combat Construction Engineer and earned a Good Conduct Medal. After his honorable discharge from the Army, he received an undergraduate degree in Civil Engineering from Virginia Polytechnic Institute and State University in May, 1988. In addition to his Bachelor of Science degree, a certificate was presented to him for the completion of a Program of Surveying Specialization as prescribed by the Department of Civil Engineering.

During his undergraduate years, Mr. Long participated in the Cooperative Education Program. He worked for the Department of Public Works in Fairfax County, Virginia, in various Civil Engineering capacities which involved the areas of storm drainage, line maintenance, surveying, public improvements, and road program management. Prior to his graduate studies, he worked for Autometric, Inc. in Alexandria, Virginia as a summer intern and continued as a part time employee throughout his graduate program.

Mr. Long is a member of the American Society of Civil Engineers and the American Society for Photogrammetry and Remote Sensing. He is also an Engineer-in-Training.

Barrington Long

Barrington Long