A STUDY OF THE VARIABLE FACTORS CONTROLLING SPRAY DRYING

By

William Caldwell Cornell

A Thesis Submitted for Partial

Fulfillment for the Degree of

MASTER OF SCIENCE

in

CHEMICAL ENGINEERING

Approved:

Albert H. Cooper
In Charge of Investigation

Frank C. Vilbrandt
Head of Major Department

Earle B. Norris
Dean of Engineering Division

Levis O'Shaughnessy
Director of Graduate Studies

Virginia Polytechnic Institute
Blacksburg, Virginia

1942

LD
5655
V855
1942
C376
c.2

116996

TABLE OF CONTENTS

		Page
I.	INTRODUCTION	1
II.	REVIEW OF LITERATURE	3
	A. History	3
	1. First Process	3
	2. Early Drier	3
	3. Development of Modern Drier	3
	B. Theory	5
	1. Drying	5
	2. Drying the Particle	6
	3. Particle Temperature	6
	4. Conduction of Heat Within the Particle	6
	5. Heat Transfer to the Particle	7
	6. Heat Transfer by Convection	7
	7. Heat Transfer by Radiation	8
	8. Calculation of Point of Complete Drying	8
	9. Drying Rate	9
	10. Drying Aids	9
	11. Efficiency of Drier	9
	12. Discussion of Thermal Efficiency	10
	C. Drier Design	12
	Factors Affecting Operation	18
	Applications	21
	D. Similar Processes	23

III. EXPERIMENTAL 26

A. Purpose of the Study 26

B. Plan of Investigation 5

C. Materials 27

D. Drawings 27

E. Apparatus 35

F. Methods of Procedure 41

G. Experimental Data 44

H. Results 112

IV. DISCUSSION 120

A. Discussion and Interpretation of Results 120

B. Recommendations 123

C. Limitations 124

V. CONCLUSIONS 126

VI. SUMMARY 127

VII. BIBLIOGRAPHY 129

VIII. ACKNOWLEDGEMENTS 133

TABLES

		Page
TABLES.		
1 - 29.	Operating Data and Product Analysis	44-101
30.	Anhydrous Salt per Liter Stock Solution	103
31.	Properties of Kerosene	103
32.	Pitot Tube Traverses	104
33.	Steam Rate	104
34.	Operating Conditions and Product Characteristics of Spray Dried Sodium Sulphate	113
35.	Material Balance	114

DRAWINGS & PHOTOGRAPHS

	Page
DRAWINGS.	
1. Assembly Drawing	29
2. Flow Sheet	30
3. Detail Drawing	31
4. Turbidity Meter	32
PHOTOGRAPHS.	
1. Cyclone Separator	33
2. General View of Drier	33
3. Control Panel	34
4. Inlet Duct	34

FIGURES & CURVES

FIGURE.		Page
1.	Maximum Thermal Efficiency During Evaporation of Water from a Nonsoluble Substance	11
2.	Turbidity Meter Curve 1	109
3.	Turbidity Meter Curve 2	110
4.	Turbidity Meter Curve 3	111
5-9.	Product Analysis Curve	115-119

I. INTRODUCTION

In general, drying infers the removal of relatively small amounts of liquid from a material at a temperature below the boiling point of the mixture. Usually the liquid is water, and the material dries to a solid.

The type of drier used for this operating is determined by the physical and chemical properties of the material. Commonly, these considerations are supplemented by special economic factors. Considerable difficulty has been experienced in drying heat sensitive materials without overheating them. Much time has been devoted to this problem, and several types of equipment have been designed and used with limited success. The most satisfactory drier developed for this operation is the spray drier. Some of its advantages are: 1) continuous direct drying from liquid to solid with large capacity and low maintenance costs; 2) freedom from overheating; 3) uniform composition of product; 4) powdered product without subsequent grinding, and of which the bulk density can be controlled.

Spray drying is a form of air drying. Essentially it consists of the removal of a liquid from a solid in solution or in suspension, by atomizing the mixture in a chamber of circulating unsaturated air. The liquid is absorbed by the drying medium leaving the solid material suspended as a dust in the drying medium. The suspended product is carried out of the system by the drying medium and is separated in a conventional manner. Due to the fine atomization, a tremendous area is exposed to the drying medium and consequently the drying time is reduced to a minimum. Unfortunately, neither quantitative data nor mathematical relationships have been published which

would enable spray drying equipment to be designed on the basis of calculated drying rates.

The purpose of this investigation has been to obtain experimental data on a spray drier under different operating conditions. Solutions have been dried from different concentrations and temperatures with different atomizing air temperatures and pressures, and with different drying medium temperatures. A complete record of the operating conditions have been made during each run, and the product analyzed for particle size distribution, moisture content, and bulk density. An attempt has been made to study the effects of the operating variables, and correlation of their relationships has been concluded wherever possible.

II. LITERATURE REVIEW

The development of spray drying has been slow. While the advantages of the process have been realized for over one-half a century, a lack of comprehension of the aerodynamics involved has limited progress to that made by experimental methods. The results often left much to be desired in practical operation, thereby further retarding development by discouragement. A majority of the articles reviewed dealt chiefly with the operation of spray drier installations. They proved very helpful in suggesting how operating variables affect the product. Attempts to advance a theory on spray drier design and operation were only found in the most recent publications.

A. History

1. First Process. The earliest record of the use of spray drying in the U. S. Patent literature was a patent taken by C. A. La Mont in 1865. It related to drying albumen.[32]

2. Early Drier. Original drying chambers consisted of a rectangular room with pressure atomizers located at one end. The spray traveled counter-current to the drying medium and fell to the floor when dry. Dried product was manually removed from the chamber in batches.[24]

3. Development of the Modern Drier. Patent records show how the operation and construction of spray driers have been improved since this crude beginning. The most important changes in design and operation will now be cited in chronological order: R. Stauf proposed in 1901 that the atomized

material be introduced into the hottest zone of drying air. In 1907, L. G. Merrell patented the use of preconcentration. E. During patented the use of superheated feed in 1908. In 1910, K. E. Osborne proposed countercurrent spraying with hot air; dried product recovered in a cyclone collector, exhaust from which is scrubbed with weak spray liquors, thus recovering dust and entrained solids and preheating the liquor. In 1914, W. H. McLaughlin proposed the use of relatively cold air introduced at a predetermined point in the drying stream to solidify the product. T. L. Merrell developed a high pressure (2000 lbs. per sq. in.) spray nozzle in 1916. R. E. G. Stutzke, in 1930, suggested the use of superheated steam directly as the drying medium, using a closed recirculating drying system. A patent was taken in 1923 by D. R. La Mont, for controlling the degree of hollowness and other characteristics of dried soap by regulating various details of the spray desiccation process. D. H. Peebles proposed, in 1935 the use of two tangential currents of drying air of different characteristics, one outside the other, and each moving in opposite directions. In 1937, H. C. Bowen patented the use of air introduced through long vertical slots into the drying chamber in such a manner and angle that dried product would not accumulate on the walls. In 1938, W. K. Burkhart patented a process for spray drying in two stages to reduce plasticity and prevent adhesion. Fritz Kurding patented the use of a volatile ammonia salt as an addition agent in drying suspensions to control bulk densities, in 1940.

B. Theory

1. Drying. Spray drying greatly exaggerates the variables encountered in ordinary evaporative processes.[44] The time required for drying is reduced greatly by atomizing the material to be dried into a rapidly moving desiccating medium. The customary expressions relating the drying factors are as follows:[9]

for drying during the constant rate period:

$$w = k_g' A (H_s - H_g)$$

where:

w = the weight of moisture vaporized and picked up by the air per hour

k_g' = the film coefficient for the diffusion process
= av^n (where a and n are constants and v = velocity of drying medium in feet per second

A = the area of the interface in square feet

H_g = the humidity of the air

H_s = the humidity of the air at the interface

also, for drying in the falling rate period:

$$-\frac{dw}{Ad\theta} = f(F) \qquad (2)$$

where:

w = weight free water percent in the solid in pounds

A = drying area in square feet

θ = time in hours

$f(F)$ = ordinate of rate of drying curve where free moisture content is F pounds per pound dry solid

It will be seen that in both (1) and (2) that the rate will be greatly increased as a result of the tremendous increase in surface area

exposed. Also in (1) the film coefficient will be large, due to the high velocity with which the particles are ejected from the nozzle. This rapid drying rate prevents the material from overheating, and is the main factor for the success of the process.[19]

2. Drying the Particle. The heat required to evaporate water from the particles is supplied from three sources. They are: 1) the internal heat of the material itself; 2) heat transferred by conduction and convection from the surrounding medium; 3) radiation. When it is considered that evaporation of five per cent of water from a water particle will lower its temperature 50° it will be realized that the first source is considerably limited. The second source is of major importance in spray drying, but the third source is not to be ignored, since it permits instantaneous heat transfer from a considerable distance.[19]

3. Particle Temperature. When a body having a moist surface is exposed to air, an equilibrium condition is set up in which the body and the surrounding air are cooled by evaporation until the air is saturated at the familiar wet-bulb temperature. This temperature can never be as high as the boiling point of the liquid and is usually much lower.[19][28]

4. Conduction of Heat Within the Particle. Since the heat transferred by conduction through a solid or liquid is rapid, compared with that through a gas, the temperature of the interior of the particle will be very little higher or lower than the surface. As the surface loses water a concentration gradient is set up which starts diffusion of water from the center to the surface. This diffusion may be modified materially in some cases by changes of diffusion resistance due to variation in temperature, or irreversible dehydration

(casehardening). If the rate of evaporation (heat transfer to the surface) is low, diffusion takes place normally, but if irreversible dehydration takes place at the surface, high resistance to diffusion may be set up.[19]

5. Heat Transfer to the Particle. As the particle dries, it is surrounded by an envelope of water vapor. This envelope materially reduces the heat transfer coefficient by forming cool blanket of air-vapor mixture which insulates the particle from the drying medium. The importance of removing this vapor film will be apparent when considering that the first one per cent of moisture evaporated will surround the particle with a layer of cool gases equal to about five times the radius of the particle. As the particles are so small that they are readily conveyed by the gases, some form of centrifugal action, such as turbulence, is necessary to produce the relative motion which is essential to spray drying at a reasonable rate.[19]

6. Heat Transfer by Convection. An equation has been proposed[20] for the heat transfer coefficient for convection to small particles suspended in a gaseous medium. Expressed in its general form for high Reynold's numbers, it agrees closely with experimental results:

$$h_{cp} = 0.714 \sqrt{\frac{k V \rho_g c}{D_p}}$$

where:

h_{cp} = heat transfer coefficient for spherical particles

k = thermal conductivity of the material

V = velocity of particles relative to wall

ρ_g = density of gas c = specific heat of gas

D_p = arithmetic average diameter of particles in the cloud

7. Heat Transfer by Radiation. The coefficient of radient heat transfer to clouds of particles expressed on the basis of the area of the particles is given by:[20]

$$h_r = \frac{0.173\, e_p \left[(T_w/100)^4 - (T_p/100)^4 \right]}{1\,(T_w - T_p)}$$

where:

h_r = radiation coefficient

e_p = absorptivity of cloud of particles

T = absolute temperature; subscripts p and w refer to that of the particle surface and wall surface respectively

1 = ratio of particle area to wall area

8. Calculation of Point of Complete Drying. It has been suggested that[20] the point at which drying is complete might be calculated by using the following equation for calculating the particle trajectory in conjunction with the equations for heat transfer coefficients (p. 7, par. 5 & 6) and the general drying equation (p. 5). The trajectory equation is a form of Stokes law for constant settling rate in a centrifugal field and is as follows:

$$u_r = \frac{V_t^2\,(\rho_s - \rho)\,D^2}{18\,\mu\,r}$$

where:

u_r = velocity (ft. per sec.) in a radial direction

V_t = fluid stream velocity (ft. per sec.) in a tangential direction

ρ_s = actual particle density (lbs. per cu. ft.)

ρ = fluid density (lbs. per cu. ft.)

D = particle diameter (ft.)

μ = fluid viscosity (lbs. per ft. (sec.))

r = radius of curvature feet

9. Drying Rate. The factors which control the drying rate of a particle are: 1) temperature difference; 2) characteristics of material, (i.e. tendency to case harden, affinity for water, degree of dehydration, etc.); 3) film characteristics; 4) humidity. The size of the particle does not affect the drying rate as much as might be expected. The large particles travel with a greater velocity than small ones. Consequently the vapor film surrounding the particle is thinner and permits the particle to dry more rapidly. The result is that both particles will dry in the same time.(19)

10. Drying Aids. Trouble is frequently met in drying highly soluble materials (solubility increases on concentration) with drops of liquid forming in the discharge. Colloidal materials are often added to inhibit their effect. An example of this practice is in drying sugars where a colloidal stabilizer is frequently used. Detergents are used to aid in drying oily water solutions.(44)

11. Efficiency of Drier. The most efficient heat transfer occurs at high temperatures, so the drier should be run at the hottest temperature that the material can stand. Since the material does not go above the wet bulb temperature during drying, the maximum safe temperature is usually determined by the gas temperature in the zone of dry material. This temperature is lower than the inlet temperature, since heat has been absorbed in the drying process, and is dependent on the individual drier operation. For this reason, it is usually determined experimentally.(19)

Other factors affecting the thermal efficiency are: 1) radiation losses; 2) outlet temperature. An equation incorporating these factors states:(19)

$$\text{Thermal Efficiency} = \frac{1 - \frac{R}{100}\,(T_1 - T_2)}{T_1 - T_0}$$

where:

T_0 = atmospheric datum

T_1 = temperature of entering gas

T_2 = temperature of exit gas

R = radiation loss expressed as percentage of total drop in the drying zone.

12. Discussion of Thermal Efficiency.[19] One hundred per cent thermal efficiency presupposes uniform contact of every portion of air with the spray. This is impossible due to channeling in the drier, slow drying (case hardening and slow diffusion) failure to utilize the advantages of countercurrent operation, and soluble impurities.

Figure 1 shows the maximum practical thermal efficiency that can be obtained when evaporating water from a nonsoluble substance.

Practical experience has shown that over a rather wide range of inlet temperature (from 500° to 1000° F for T_1) the temperature at the end of the spraying zone, T_2, may be held approximately in the range of 170° to 300° F. Taking these data into account, it will be seen that the following factors make for and control the efficiency of the spray-drying operation: 1) high inlet temperature; 2) low exhaust temperature; 3) recovery of heat from exhaust gas beyond the drying zone; and 4) reduced radiation loss. Recovering some of the heat from exhaust gases by recirculation has been found to double the efficiency of some plants.

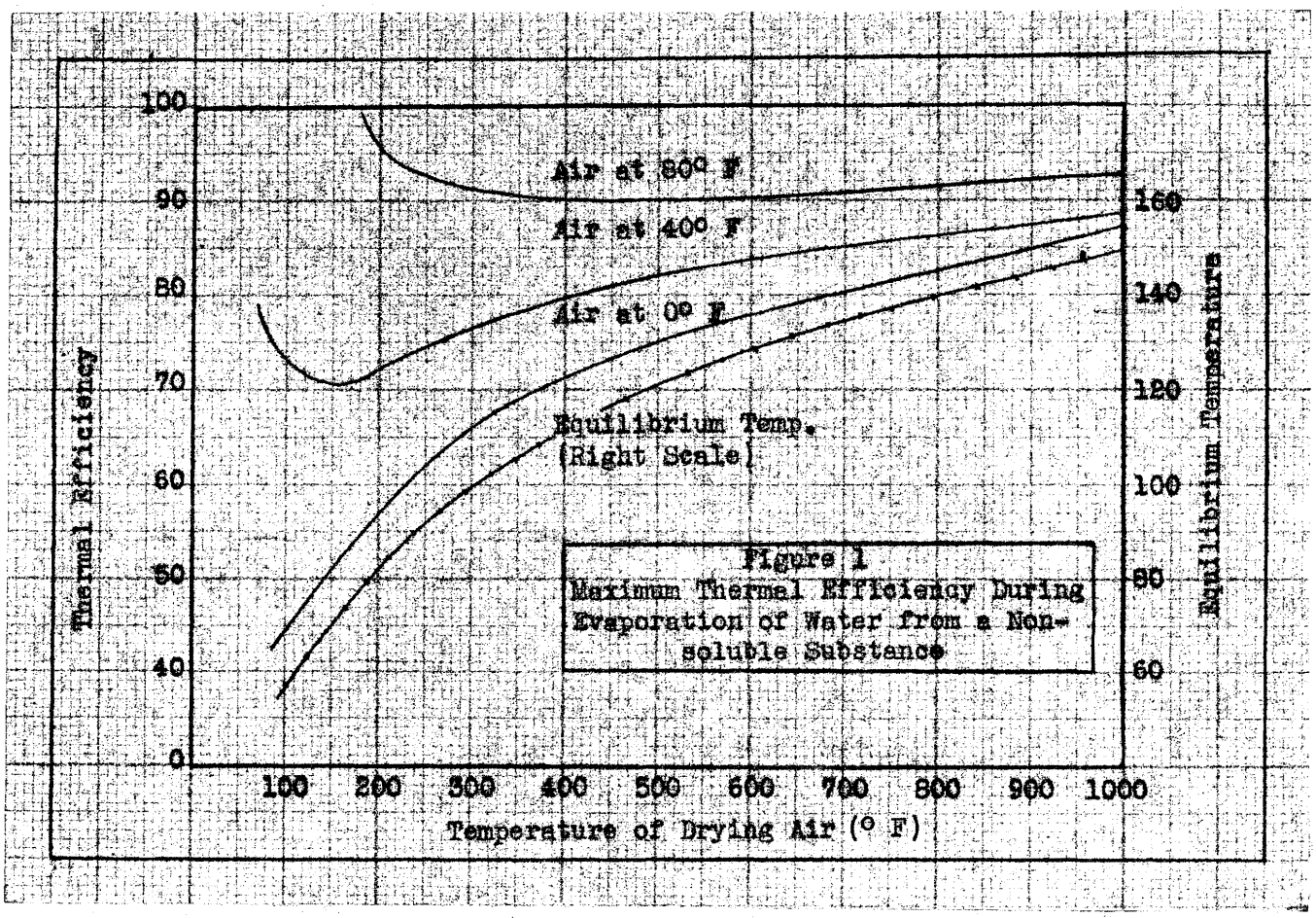

Figure 1
Maximum Thermal Efficiency During Evaporation of Water from a Non-soluble Substance

G. Drier Design

The equipment for spray processing consists essentially of a chamber and spray mechanism for contact between spray liquor and gas stream supplemented by accessories such as the pump, piping, and heat exchangers for the feed liquor, the fan, air heater, and duct work for supplying the drying gas, and a means of recovering the dried product.

The Spray Chamber. The vertical cylinder type of drier with feed in the center is accepted as the standard form of drier. The length of the drying zone is frequently made equal to the diameter of the chamber, and the bottom is usually an inverted truncated cone to collect the product.[19] Long spray towers are also being used with some success.[48] Their use is chiefly in drying soap, when slow drying is desirable to retain as much moisture in the product as possible.

Drying Air. The greatest point of controversy in chamber design is in the method of introducing the drying air. Theoretically the highest thermal efficiency is obtained when the air flows countercurrent to the material to be dried. However, practically, concurrent flow is most frequently used. Concurrent flow helps to prevent overheating of the product, since the dried material is only exposed to the relatively cool drying medium leaving the chamber.[19][35]

The gas may be introduced in a series of tangential louvers along the side of the chamber from tangential ports in the upper zone only, or the flow may be split, part of it being introduced in peripherial ports, and part coming in on annular streams around the atomizer.[6] The flow of air in this latter system may rotate in the same or opposite directions. This device

was used by the Western Precipitator Company to prevent the material from overheating, and to lower the humidity of the drying air.[6]

Most driers are operated under a small vacuum to prevent any product from blowing out leaks and around the inspection parts. Lowering the pressure also facilitates rapid drying by increasing the available temperature difference. (Increasing the vacuum, increases the partial pressure of the water vapor.)[35]

Drier Size. The diameter of the drier must be built between two limiting conditions; a minimum when the particles from the atomizer hit the wall before they are dry, and a maximum where the gas flow cannot be controlled to give a uniform reaction. Large chambers (20 ft. diameter) are preferred in industry because they require no more operation attention than smaller chambers and give a much greater capacity. For an extremely fine product (300 mesh) small driers (5 ft. diameter or less) may be operated successfully.[19]

The height of the tower is determined by the trajectory of the atomizer. Devices which have a large downward component of velocity will necessitate a taller chamber than atomizers with no horizontal component. The height must also be greater when secondary air is introduced in the lower zone, since the drying zone will be made smaller.[19]

Atomization. The choice of atomizer is the greatest importance, since the thermal efficiency and continuity of operation depends solely on the means of dispersion. Spraying the liquid into the drying chamber may be done by one of three general methods.[19]

Pressure Nozzle. The feed is pumped to the spray nozzle under

pressure (100-1000 lbs. per sq. in.). The nozzle is usually of the tangential spin type, and sprays an uniformly size particle. The chief disadvantage of this type of nozzle is its low capacity and tendency to clog.[19]

Two Fluid Nozzle. The energizing medium in this second type nozzle is compressed air or steam. The feed is introduced to the nozzle at a low pressure and is picked up in the high velocity stream of the second medium and carried through the nozzle orifice. The cooling effect of the expanding gas must be taken into consideration when measuring the feed temperature. One of the biggest disadvantages of this type of nozzle is that the particle size covers a wide range and it is impossible to control.[19]

Centrifugal Atomizer. This type of atomizer is now generally used. It consists of a series of vanes around the periphery of a disk (6 - 18 in. diameter) which is rotated at a high speed.[12][19] The feed is allowed to impinge on them and is thrown off and atomized by centrifugal force. The disk is rotated by a direct turbine, or electric motor drive. The speed of the electric drive is stepped up by gears or a frequency changer - 15,000 rpm is not unusual. In cases where a frequency changer or a direct drive is used, it is customary to water cool the unit.[12] Special precaution is taken to shut down the drier in case the cooling water fails. This is usually done automatically by means of a flow switch in the cooling water line.[12] This type of atomizer, as well as the other two mentioned, should be installed in such a manner that it is readily available for inspection, and a spare unit should be kept on hand in case of failure, since the atomizer is the most important element in the drier.[12] None of these nozzles can be used satisfactorily with abrasive materials.[44]

Liquid System. The liquid is pumped by standard means, using gear pumps for high pressures. Frequently, the liquor is preconcentrated in an evaporator to give a larger particle size by increasing the solid content of the particles.[37][17] Preheating the feed is common practice to facilitate rapid drying by reducing the sensible heat required for drying the particle.[44] Usually when the material is valuable, the fines from the exhaust duct are recovered by scrubbing the gas with feed solution.[44] Some heat is also recovered in this system and the feed is evaporated to a certain extent.[12][37]

Choice of Drying Medium. The drying medium is a gas, and any gas that is inert to the material being dried may be used. Air is most commonly used, although flue gas is widely used as well as CO_2. Hydrogen also has been proposed.[38] The most economical gas to use for drying is hot flue gas.[37][19] It's use depends on whether it is available and whether it will contaminate the product. The latter criteria also holds true for air. In some cases when air is used, it is necessary to keep foreign particles out by using a filter. When the material may be oxidized, an inert gas, such as carbon dioxide, is used.[17]

Heating the Medium. The advantages of using flue gas is that it is already heated, and the temperature is controlled by merely diluting it with cold air.[12] The operating temperature is chosen to be the hottest that the material can stand, within practical limits and other mediums must be brought to this heat by some means. The most common methods are: 1) steam heaters, 2) electric heaters, 3) oil heaters, and 4) flue gas heat exchangers. Frequently, two stages are used in heating. For example, a flue gas heat exchanger may be used in the first stage, then an oil heater used to bring

the medium up to operating temperature. The operating temperature of most driers runs from around 300° to 1200° F.[19][35][37]

Heat Recovery. Recovering the heat that has not been used in the drying operation is an item of the greatest importance in a successful, economical operation of the drier. This problem is not usually considered when flue gas is used as the drying medium, because waste heat must be considered in all the other heating methods because it contributes to the expense of the product. It can never be hoped to recover all of the heat not used, but several methods are commonly used to save some of it. One method is to pass the exit gas through a heat exchanger which preheats the incoming gas.[37] When a heat exchanger is used, special precautions must be taken to prevent fouling. Another plan is to scrub the exit gas with the feed.[44] The benefits of this procedure are twofold. First, entrained fines are saved, and secondly, the feed is preheated to a small extent. Still another method of heat recovery is to recirculate a portion of the medium. While this method is attractive from a theoretical aspect, it is seldom used because of the risk of getting incomplete drying, and condensation due to the gas getting saturated.

Product Recovery. In the original spray driers, the product was taken from the floor manually at the end of each run.[24] Certain definite plans have developed to adapt the drier to continuous operation and prevent the product from becoming overheated by remaining in the chamber.

Collecting Product in Drier. There are two general designs followed for collecting the product in the drying chamber.[36] The first is to slope the sides of the lower zone so that the product is concentrated by gravity at a

point. The second is a plan that has been used by the Bowen Research Corp. It is to concentrate the dried material from the flat bottom of a drying chamber by the use of rotating air brushes.[11] This latter plan has now been superseded by the former.

Removal of Product. The problem of removing the dried product from the chamber (low vacuum) is solved by dropping the powder through two self closing doors to seal the vacuum (or pressure). The doors are operated by the weight of material collected.[12]

A second method of removing the product is by flotation. Since the particle size is small, it may easily be carried in an air stream from the drier. When this system is used, the gas exits from the bottom of the drier, and the solid material is removed in an air separator (Sirocco or multicione type) placed before the fan to prevent any destructive abrasive action on the fan blades.[11][35][37]

The bulk of material having been removed by one of the above methods, the fines can be filtered out by means of a bag filter, or the exit gas may be scrubbed free from entrained materials.

Dust Explosion. Frequently materials which produce combustible dusts are dried in this process, and handling the dust and air mixture presents a serious hazard. A recent investigation of a milk drier explosion[30] brought out several points that should be realized before designing or operating a spray drier. The effectiveness of the devastation made it impossible to determine the exact cause, but the following possibilities were suggested: 1) external source of fire, such as faulty electric wiring, smoking,

overheated bearings; 2) spontaneous combustion of materials inside the chamber, such as wood structural sections, or felt exhaust filters; 3) static electricity generated at the nozzles; 4) foreign material becoming ignited and sucked into the drying chamber. The fourth theory seemed the most plausible for this particular case, since the steam heating unit had recently been cleaned. A small piece of oily waste might have been left in the heater during this operation, and become ignited when the drier went into operation. The large volume of air passing over the heater and the high temperature at this point would certainly present ideal conditions for ignition.

Factors Affecting Operation

Important characteristics of spray dried particles include size and uniformity of size, shape, density, and structure. These characteristics are affected by the nature of the material to be dried, the manner of spraying, and the subsequent treatment during the drying operation.[19]

Feed Characteristics. As far as particle form is concerned, the most important characteristic of the material to be dried is its fluidity. A high viscosity will resist disruption of the fluid.[19] Surface tension also has a marked effect on forming the particle.[33] In general, high fluidity and high surface tension tend to produce spherical particles and to permit easy control of particle size.[19] Preheating the feed reduces the viscosity of the feed, and also helps promote drying by increasing the vapor pressure of the solution,[44] however, it has been found not to affect particle size.[47]

Using a concentrated feed solution reduces the moisture content, thereby facilitating rapid drying. It also produces larger particles with less bulk and greater solubility.[18] [37]

Atomization. The action of the nozzle is the most important single factor in determining both the character of the final product and the action of the spray chamber in the drying operation. Three distinct functions are performed: 1) breaking up the fluid into particles of the proper size, 2) forming these particles into a suitable external shape and internal structure; and 3) distributing the particles in the drying medium. Three types of nozzles mentioned on a previous page (p.13) are used industrially,[19] but the two fluid atomizing type is most practical for small experimental driers.[47] Its use eliminates high pressure equipment or expensive high speed equipment. However, its use is limited to relatively fluid materials that are easily broken up, since the energy that can be imparted directly to the liquid is very small in comparison with the energy available in the atomizing air. (The two fluid nozzle does have perfect distribution of energy to each particle of fluid giving a very uniform spraying action.). The mechanism of atomization by air or steam is more complex than that in the other types. The primary atomizing action is due to the turbulent action of a high-velocity jet of gas moving past a liquid surface. This causes particles of fluid to be blown off, frequently dragging out filaments of fluid behind them, which then breaks down into small droplets. In this case, a primary particle may be much larger than the particles formed by breaking down the filament and, since, the action is somewhat fortuitous, the result is a considerable range of particles sizes. This simple action is complicated when pulsation occurs

in the atomizer.[19]

Temperature effect of expanding air in the nozzle must not be overlooked. For example, adiabatic cooling of air from 15 pounds per square inch at 80° F to atmospheric pressure will reduce the temperature to 17° F. Increasing the temperature to 250° F at the same pressure will raise the temperature of the expanded air to 0° F.[19]

The particle size is controlled in two fluid nozzles by adjusting the gas pressure; increasing this pressure increases the degree of atomization. Fluid pressure only controls the amount of feed delivered.[33]

Subsequent Treatment. After the material has been sprayed into the chamber, several factors affect the nature of the final product. As previously stated (p. 7) a high relative velocity between the particles and drying medium is essential. Likewise proper chamber design should provide for rapid removal of the product to prevent overheating.[19] Secondary cold air inlets to cool the drying medium may be necessary to prevent overheating the product.[6][11] Duct work should be lagged where danger of cooling the drying air below its dew point exists. Condensation in the ducts and in separating equipment may present a very real problem.[19] When bag filters are used to recover the product, they should be likewise protected against cooling by enclosing in a chamber.[37] When the system is run at sub-atmospheric pressures, particular care should be taken to prevent air leaks around the product collection equipment. The necessity for this precaution will become especially apparent when hygroscopic materials are dried in the plant.[37]

Applications

Characteristics. The field of spray drying is limited by its expense and by the forms of the product. A large amount of heat is wasted in the process which makes it economically unsound unless waste heat is available (i.e. flue gas) or the materials are not adaptable to any existing drying methods. Since the liquid is always dried from a mist, the product is always a fine powder, which may not be desirable. However, spray drying is the best method for rapidly drying material at a temperature below the wet bulb temperature. While the particle size is small, it is controllable to a certain degree and its spherical shape makes the product very mobile. The degree of drying and hollowness of the particle is also controllable. Hygroscopicity is also lessened by the form of the product. The spray process is very adaptable for drying solutions of sticky amorphous materials which are required in a dry pulverulent form, since grinding operations are eliminated.(37)

Drying Milk. Milk was one of the first materials to be dried commercially on a large scale. The reason that it could be dried in the early units was chiefly due to the value of the product. A substantial profit, even when operating inefficiently, gave the process its impetus. Milk is dried to 6-8 per cent moisture content by the process and will keep indefinitely. When the powder is dissolved in water, it has the same vitamin content and flavor.(21)

Before drying, milk is condensed to 33 per cent solids (cheaper to dry and increases apparent specific gravity). It is then preheated to 140° F and atomized at 1000-4000 pounds per square inch, and dried in a chamber

under a partial vacuum (0.5 atmosphere) at a temperature varying from 170° F to 270° F, depending on the process. Moist outlet air is usually used to dry casein, because its high moisture content prevents case hardening and waste heat is partially recovered (i.e. Merrill-Soule Process, Grey-Jensen Process).[31][10]

Drying Soap. Soap is another material easily dried in a spray drier. Pure soap and soap containing silicate of soda are sprayed at relatively high temperatures, since considerable moisture is removed. The dried product consists of thin walled globules. Drying soap mixed with soda ash will be discussed under allied processes (i.e. Wurster and Hanger Spray Process), (p.24).[44][48]

Drying Fruit Juices. For drying fruit juices and preserving their delicate aroma, it is necessary to have continuous evaporation and as short a time of contact as possible. These conditions are realized in the spray drying process, and fruit juices are dried without destroying their vitamin content. Observations have shown that fruits with a large amount of Pectin dry easily, (i.e. Kestner Process).[36]

Spray Drying Latex. Spray drying latex gives a superior product and permits incorporation of compounding materials without harmful mechanical mauling. An 18 inch rotary atomizer is used to spray the latex and compounding materials into a chamber heated to 350° F. The drying air is heated directly by oil burners. Latex is sprayed at the rate of 200 gallons per hour. The product collects on a removable floor, which is periodically rolled out and dumped.[15]

Drying Insecticides. A recent highly successful application of spray drying is in the manufacture of insecticides. These materials are corrosive and poisonous. They are usually prepared by precipitation (copper bordeaux,

zinc compounds and Paris green) and were formerly filtered, dried, and ground. In the spray process the precipitate is washed, filtered, repulped and fed direct to the drier. Automatic control keeps the drier temperature within ± 1° F, giving a high quality product. The poisonous dust hazard has been completely eliminated. A rotary atomizer is used, and this reduces the particle size to even less than the size precipitated. Material that would be destroyed on prolonged exposure to temperatures greater than 350° F is subjected safely to drier temperatures as high as 1000° F. (Peebles.)[1]

Other Materials Spray Dried. Experimental work carried out with a Gray-Jensen type drier show that blood, eggs, gelatin, vegetable flour, sugar products, and many inorganic salts can be dried successfully.[44]

A list of materials dried commercially in Seven Spray driers includes over fifty organic and inorganic materials successfully dried.

In general, any liquid carrying solid in fine suspension or solution might be dried by this process. Abrasive materials, liquids with a high viscosity, liquids with low solid content, and cheap materials are not satisfactorily handled by the process.[44]

D. Similar Processes

Difficulties with the spray drying process have led to the development of several other processes which operate on principles very similar to the spray drying process. A brief survey of the types of equipment developed for these allied processes show their correlation.

Tower Driers. For drying soap mixtures from about 12-15 per cent soap and a high per centage of soda ash and moisture, tower driers are used. A hot solution is sprayed into a tower by atomizers or mechanical devices. While the material falls down the tower, the soda ash takes up water as water of crystallization and the granules cool and harden. Air is circulated through the tower without any special conditioning.(48)

Drying Black Liquor. Alkali in the black liquor from sulphite pulp wastes is recovered by drying the liquor in a furnace, and then leaching the ash. Handling the liquor must be cheap for the success of the process. By atomizing it directly with fuel oil, the most efficient heat transfer can be realized without troublesome corrosion problems. The furnace operates at a high temperature and a large proportion of the heat transferred is by radiation.(28)

Flash Driers. Experience has shown that certain materials may be handled better in flash or dispersion driers than in spray driers. Zein, for example, was found to be particularly difficult to dry in a spray drier. The chief objection was that the material adhered to the walls of the drier. This was probably due to slow diffusion of moisture from the particle interior to its surface.

In flash drying some of the dried product is recirculated, and the initial moisture concentration is much lower than in spray drying. Instead of spraying the material, it is fed into a drying duct from a pug mill as a semi-solid. Oversize material is separated in an Impax type of separator and recycled. Product is removed from the air stream by a cyclone separator.(39)

Drum Driers. Milk and other heat-sensitive materials have been dried

satisfactorily on drum driers. The chief disadvantage with this type of drier is its tendency to overheat the material. The problem of removing the material from the hot drum the instant it is dry involves too many factors to be controlled suitably to produce a high grade product of uniform consistency from heat sensitive materials. For example, changes in the drum temperature, moisture content of original material, thickness of film on the drum, feed temperature and other operating variables will change the drying time. Consequently the speed of the drum or the position of the doctor knife would have to be altered to compensate for these changes at the instant when they occur. The impracticability of attempting any such control is obvious. Hence, the use of drum driers is limited in the range of drying heat sensitive materials.[12]

III. [illegible]

A. Purpose of the Study

The purpose of this research is to investigate and correlate the interrelation of the numerous variables encountered in spray drying, which affect the diffusion operation and the characteristics of the dried product.

B. Plan of Investigation

The plan of experimental work started with a complete redesign and reconditioning of the present system. In addition, a two fluid atomizer and a dust recovery system were designed and constructed. When this work was completed, a series of drying studies were made using a sodium sulphate solution. The operating variables investigated were as follows:

1. Solution

   a. Concentration
      35, 40, 50, 60, 75, 100 per cent saturated
   b. Temperature
      75, 90, 105, 115, 130, 187, 150, 200 °F

2. Nozzle

   a. Atomizing Air Temperature
      75, 170, 200, 250 ° F
   b. Atomizing Air Pressure
      8, 10, 15, 17, 20, 25, 25 pounds per sq. in.
   c. Feed Pressure
      0, 1 in. mercury

3. Chamber Conditions

   a. Temperature
      100, 150, 190, 200, 220 ° F

These studies were all made as variations from a standard set of operating conditions which were determined in preliminary runs. The standard run consisted of operating under the following conditions.

1. One liter of stock concentrated feed at room temperature.
2. Inlet chamber air at 320° F and atomizing air at 290° F.
3. Nozzle operating under balanced feed pressure (0 in. Hg) and air pressure at 15 pounds per sq. in.

During each run, inlet and outlet air humidity was determined by taking dry and wet bulb temperatures. The atomizing air temperature and feed temperature were also taken and recorded. Steam pressure and air pressure at the nozzle were recorded at the same interval. These intervals were as close as possible and their time, as well as the starting time for run, were recorded.

The product was weighed, screened through a 200-mesh sieve to remove foreign material and tested for bulk density, moisture content, and size distribution.

C. Materials

Native Sulphate. Phipps and Bird's commercial glauber salt was used to make the stock solution. Six kilograms were dissolved in five gallons of tap water and used directly as stock solution.

D. Drawings

In the following section there are drawings of the spray drier flow system and detailed equipment drawings. Pictures of the apparatus and details of the equipment are also included.

The first plate is an assembly drawing of the entire system. Interconnecting duct work between the drying chamber, circulating fan, and dust recovery system is shown as it was installed. The fan motor was mounted on the support indicated (6) and is left out of the drawing for clarity. The bag filter has also been omitted, its position being indicated by (9).

It extended from this position vertically to about one foot above the floor level. The upper platform, control panel, and feed system is shown, either in subsequent photographs or drawings.

The flow system is shown in drawing 2. Here the flow of both the drying medium and feed may be traced. Control points are also indicated: positions 5 and 8 being inlet and outlet psycrometers; 3 and 6 being atomizing air pressure and temperature reading points with the control valve located between them; 7 and 4 being make up air psycrometer and air heater respectively, and 9 being the air flow control damper.

Constructions details of the nozzle and cyclone separator are shown in the drawing (3) following the flow diagrams. Both of these items were constructed for this system and all essentail dimensions are given.

The fourth drawing (p. 32) shows the turbidity meter which was built to be used in the laboratory determination of particle size. The voltmeter measured the voltage, controlled by the variable resistance, supplied to the lamp bulb.

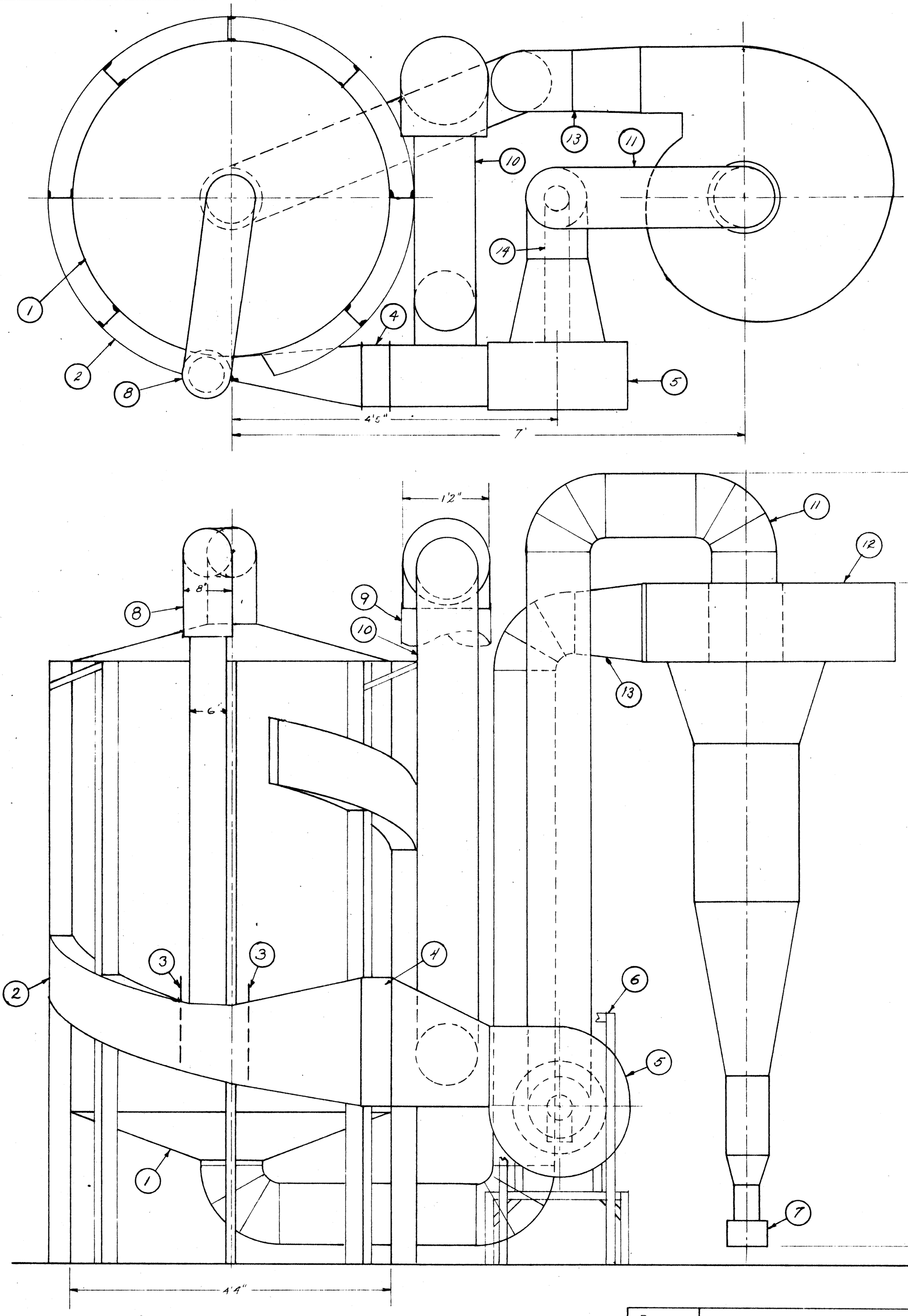

NOTE: All ducts 10" diam. unless otherwise noted.

1. SPRAY DRYER
2. TANGENTIAL INLET DUCT
3. DAMPERS
4. AIR HEATER
5. FAN
6. MOTOR SUPPORT
7. PRODUCT RECEIVER
8. DOWN-DRAFT INLET DUCT
9. BAG FILTER
10. OUTLET DUCT
11. AIR RETURN DUCT
12. CYCLONE SEPARATOR
13. SEPARATOR INLET DUCT
14. SYSTEM INLET DUCT

REVISIONS	DEPARTMENT OF CHEMICAL ENGINEERING VIRGINIA POLYTECHNIC INSTITUTE BLACKSBURG, VIRGINIA
	THESIS ASSEMBLY DRAWING SPRAY DRYER
	SCALE: 1" = 1' DRAWN: DRG DATE: 4-27-42 TRACED: HCG DATE: 4-27-42 CHECKED: DATE: APPROVED: DATE:
	1

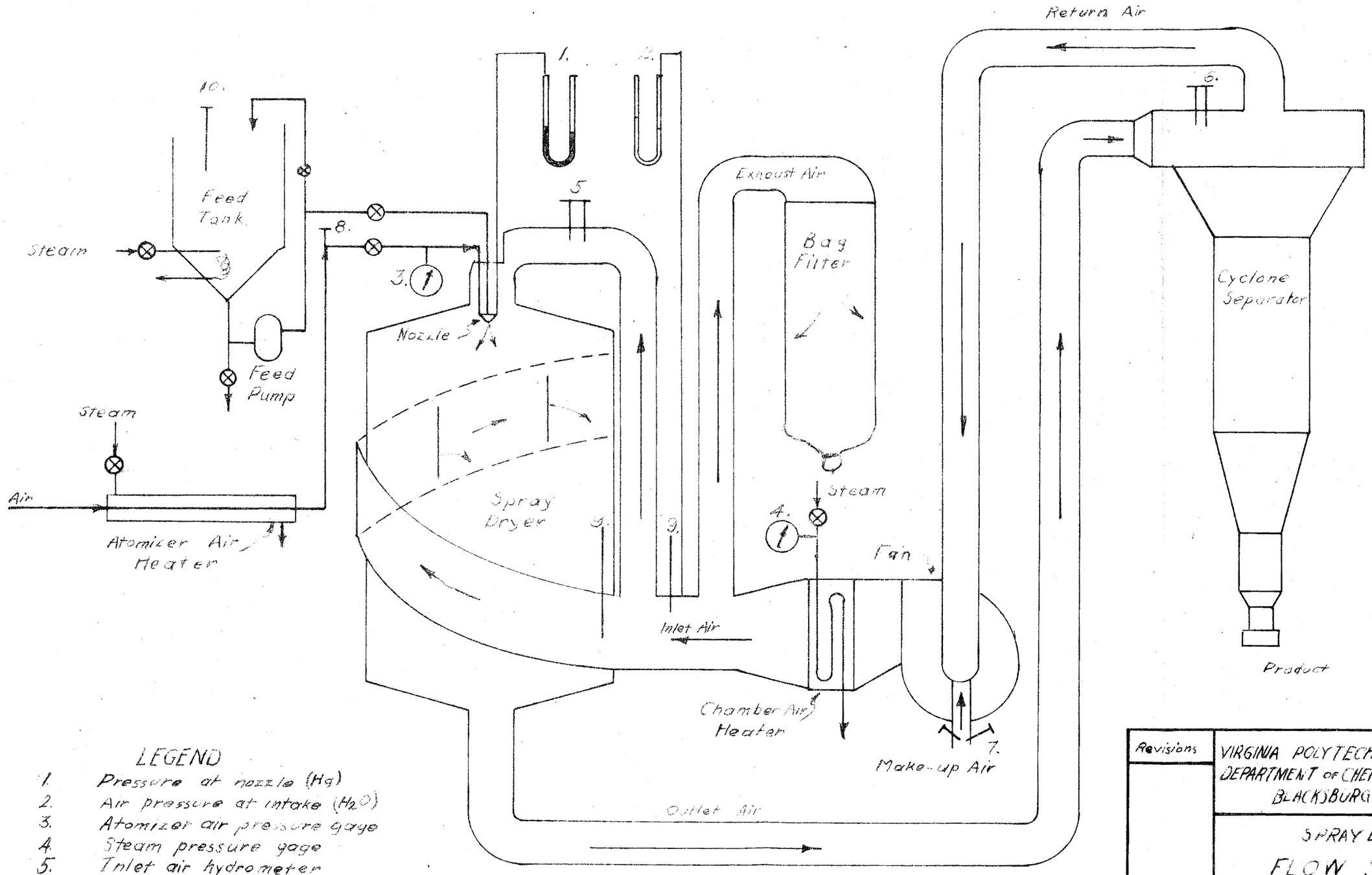

LEGEND

1. Pressure at nozzle (H_g)
2. Air pressure at intake (H_2O)
3. Atomizer air pressure gage
4. Steam pressure gage
5. Inlet air hydrometer
6. Outlet air hydrometer
7. Make-up air hydrometer
8. Atomizer air thermometer
9. Dampers
10. Feed thermometer

Revisions	VIRGINIA POLYTECHNIC INSTITUTE DEPARTMENT OF CHEMICAL ENGINEERING BLACKSBURG, VIRGINIA
	SPRAY DRYER FLOW SHEET THESIS
	Scale = None Drawn: WRY 5-1-42 Traced: WRY 5-1-42 Checked: Approved: — 2

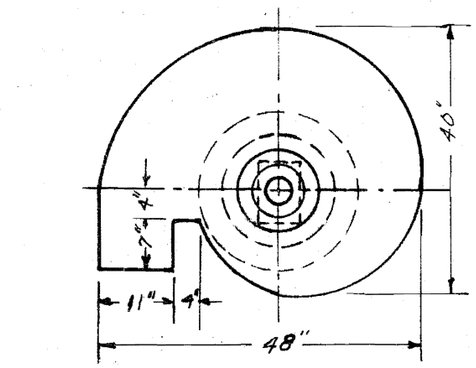

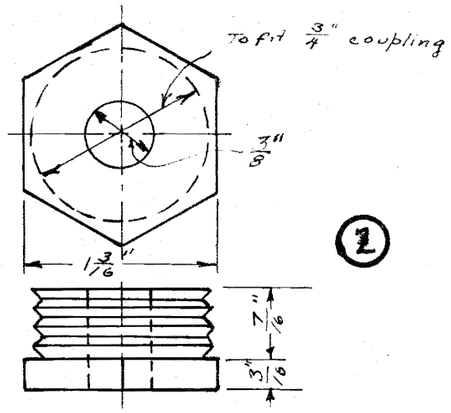

2

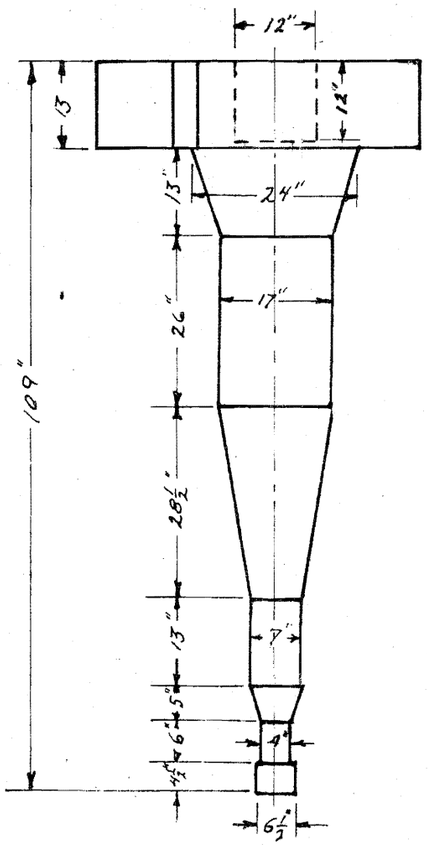

Cyclone Separator
Scale: 1/2" = 1'

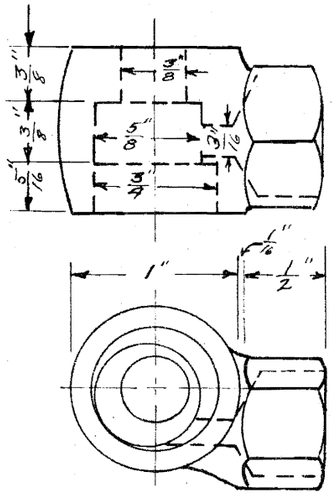

3

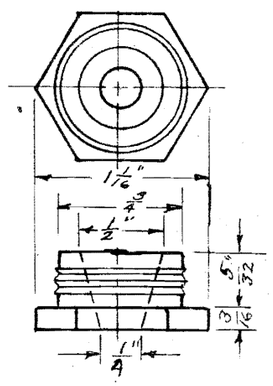

Outer Nozzle
Scale: Full Size

4

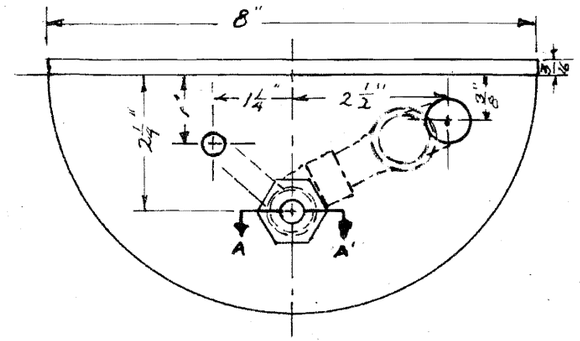

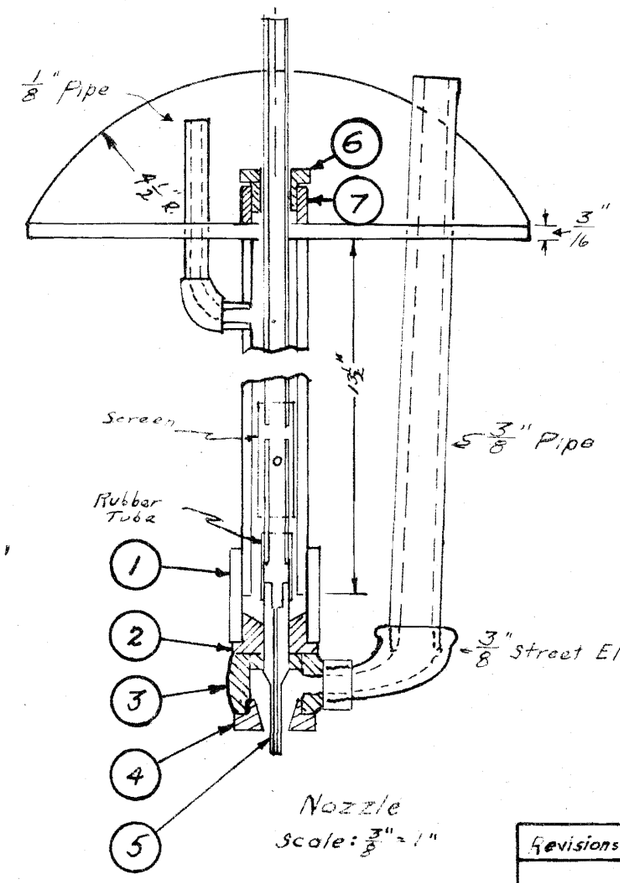

Nozzle
Scale: 3/8" = 1"

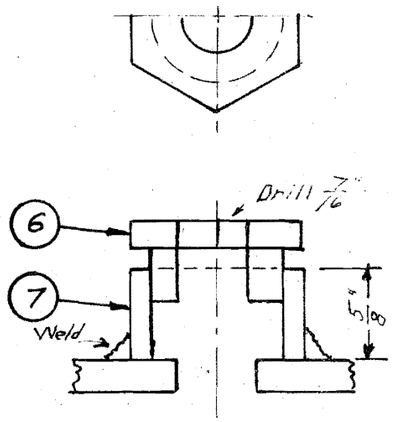

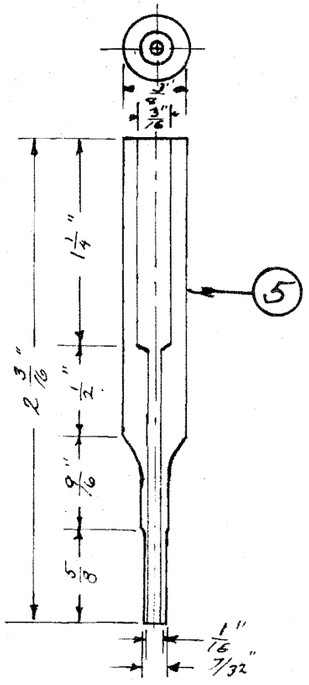

Legend

1 3/4" Pipe coupling
2. 3. 4. Outer nozzle
5. Jet or inner nozzle
6. 3/4" Pipe bushing
7. Section of 3/4" coupling

Revisions	VIRGINIA POLYTECHNIC INSTITUTE DEPARTMENT OF CHEMICAL ENGINEERING Blacksburg, Virginia
	DETAILS THESIS
	Drawn: JRG 5-3-42 Traced: JRG 5-3-42 Checked: Approved: Scale: As shown

3

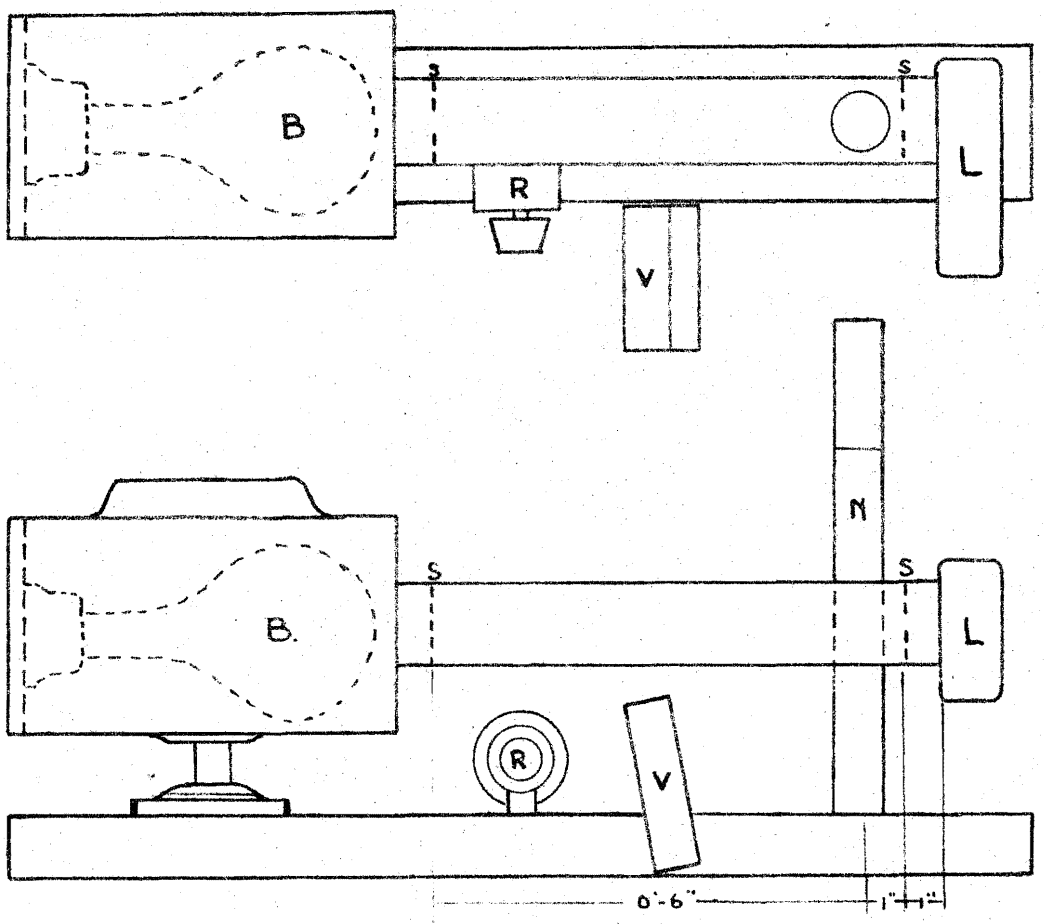

Figure

TURBIDITY METER

B 150 W Bulb
L Light Meter
N 50 ml Nessler Tube
R Variable Resistance
S Light Shield
V 120 V A.C. Voltmeter

Drawing 4

Photographs

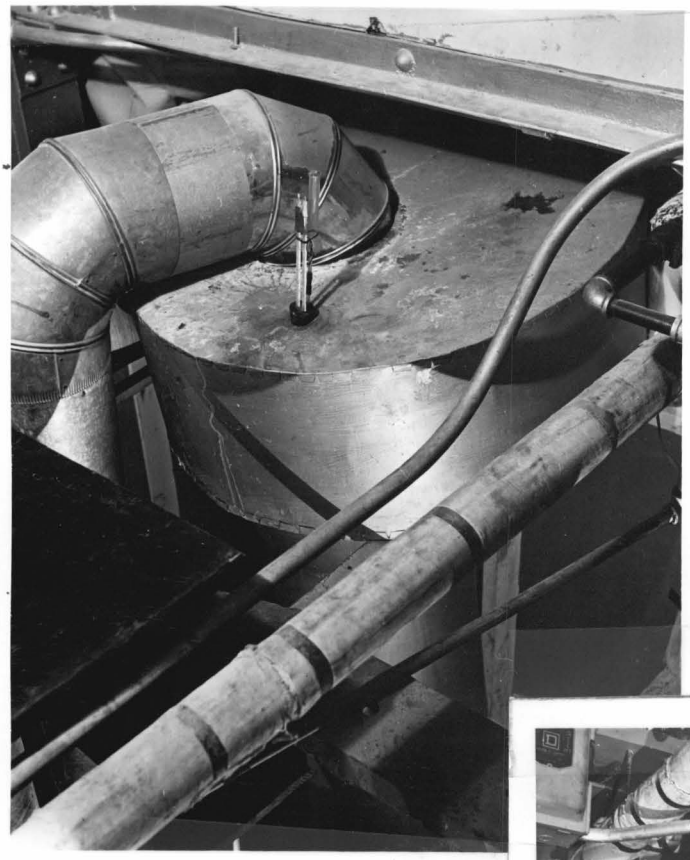

1. Cyclone Separator

View from platform showing top of separator, return duct to blower and outlet dry and wet bulb thermometers.

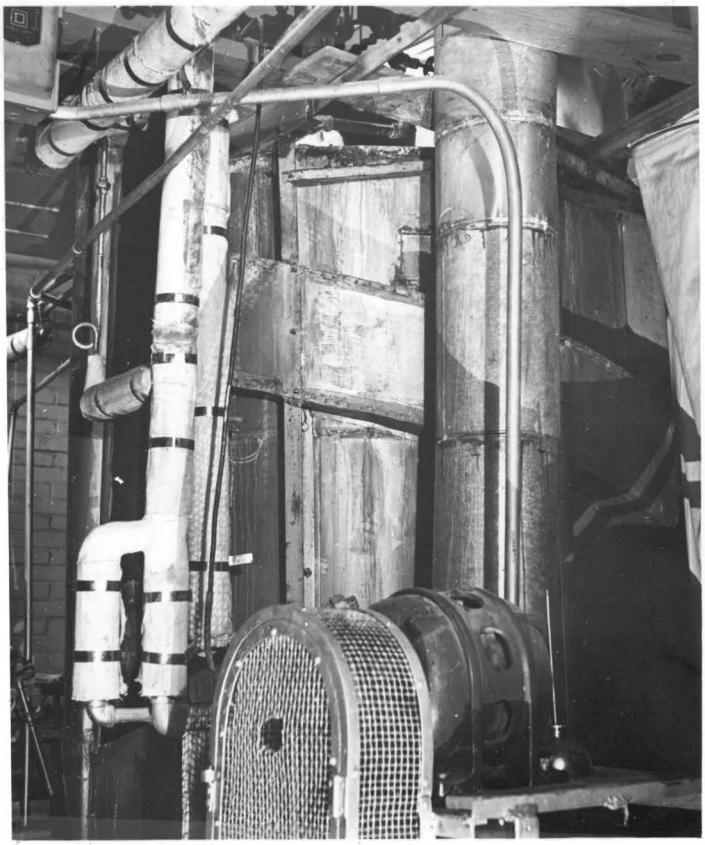

2. General View

Looking into drier room from hallway, the chamber, and bleed off duct to the bag filter. The side of the bag filter may be seen at the extreme right.

Photographs (con't.)

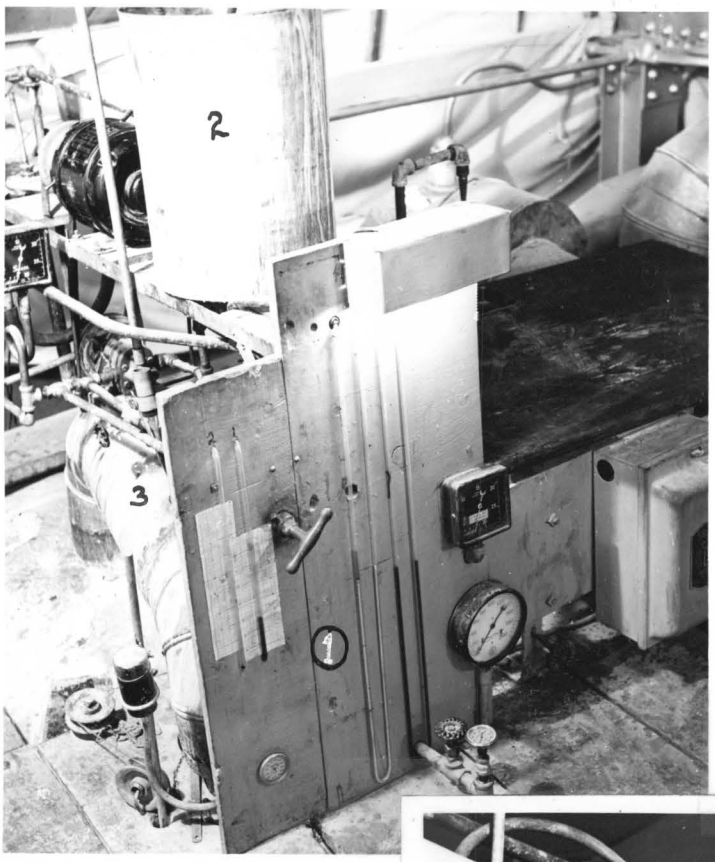

3 Control Panel

A general view taken on balcony showing controls on pannel (1), feed tank (2) inlet duct (3), and feed pump (4).

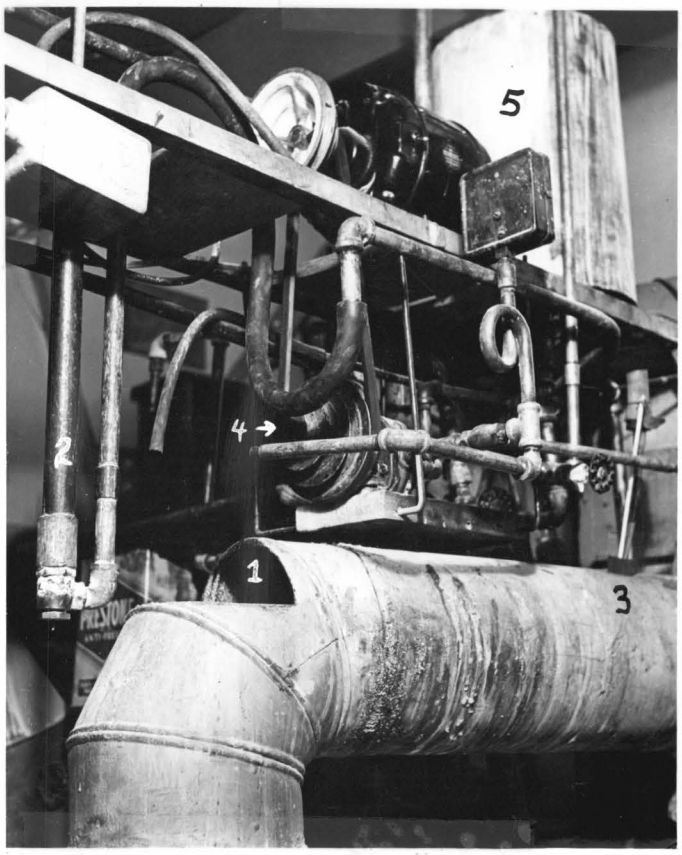

4. Duct Close-Up

Showing how inlet duct (1) was cut to insert nozzle (2). Inlet wet bulb thermometer (3), feed pump and tank (4 & 5) are also shown.

E. Apparatus

The apparatus used was the spray drier which was designed and constructed by K. A. Reddie for his master's thesis, "An Investigation of Some of the Factors Affecting Spray Drying." It was installed by K. C. Cornell for his bachelor's thesis, "Reconditioning and Study of the Operating Characteristics of a Spray Drier." When this project was started, the drier had to be completely remodeled and a cyclone separator was designed, constructed, and installed. Following is a list of materials and equipment used to make the installation and subsequent alterations.

Cyclone Separator. The cyclone separator was constructed as shown in drawing 3 of forty feet of 28 gauge galvanized iron 30 inches wide. All joints were soldered.

Ducts. All of the air ducts were made of galvanized iron. Eight 10 inch elbows were installed, and one 16 inch elbow was used at the bag filter.

Bag Filter. Seven feet of 44 inch pinnacle percale pillow tubing, purchased from Montgomery Ward, Baltimore, Maryland, was used for this unit.

Feed Tank. A five-gallon can was used with the bottom removed. A feed heater consisting of a coil of four feet of 3/16 inch copper tubing was built into the can. A rubber stopper fitted with a joint of 3/8 inch pipe was placed in the spout of the can to form the feed outlet. The tank was mounted on an angle iron support above the drier.

Feed Pump. The feed pump was connected directly to the feed tank and located underneath it. Pump specifications follow: Brown and Sharpe

Manufacturing Company, Providence, Rhode Island. Type 1-S; capacity 1.6 to 4.6 gallons per minute; 600 to 1725 RPM. Motor: Ward's Power Craft Capacitor Motor, Montgomery Ward, Baltimore, Maryland; 1/4 h.p.; 1750 RPM; 110 volts; 5.4 amps; Tamatron protected. Drive: two four step cone pulleys, 3 inches to 5 inches; one 30 inch V-belt.

Atomizer. The outer nozzle was a Rotejet type Number 10F of the Binks Manufacturing Company, 3114-40 Carroll Ave., Chicago, Illinois. An inner nozzle was constructed as shown in detail drawing, Figure 3. It was made from a piece of 3/8 inch brass rod.

Air Preheater. The air preheater was constructed from two concentric pipes. The outer pipe was 1 3/4 inches and five feet long; the inner pipe was 1/2 inch and six feet long. It was made by threading a 1 3/4-3/4-3/4 inch reducing tee to one end and using a coupling with a plug drilled to fit the 1/2 inch pipe at the other. The side of the coupling was drilled and tapped for the steam line connection. The 1/2 inch pipe was inserted and welded at both ends.

Steam Traps. Two Sarco high-pressure No. 8 traps were used. One was used on the compressed air preheater, and the other on the Sturtevant air preheater.

Wiring. The main was tapped and 3/4 inch conduit was run in through a switch panel to the blower motor. An outlet box was installed on the platform for the feed pump motor. No. 12 copper wire was used.

Switch Boxes. One Square D switch box was installed. It was the single throw type, 30 amps, 230 volts, A. C., 5 h.p.

Gauges. Two U. S. low-pressure gauges marked "Sears" were installed. One was connected between the feed pump and nozzle, and the other in the

atomizer air line between the nozzle and throttling valve. One 0-200 pounds per square inch gauge was installed to indicate the pressure on the chamber air heater. A mercury manometer was connected to the liquid feed line directly behind the inner nozzle. The static pressure in the air duct on the pressure was measured by means of a water manometer. All of these gauges were mounted on a control panel shown in photo. 3.

Piping, Valves, and Fittings.

a. 1/4 inch pipe, valves, and fittings:
galvanized pipe - 5 feet
valves - 2 globe
fittings - 8 ells, 2 street ells, 2 tees, 7 close nipples, 1 union

b. 3/8 inch pipe, valves, and fittings:
galvanized pipe - 32 feet
valves - 4 globe, 1 cock
fittings - 14 elbows, 4 street ells, 1 cross, 4 unions, 5 tees, 7 close nipples, 1 side outlet elbow

c. 1/2 inch pipe, valves, and fittings:
galvanized pipe - 3 feet
valves - 1 glove, 1 gate
fittings - 5 ells, 1 street ell, 3 tees, 1 union, 5 close nipples

d. 3/4 inch pipe, valves, and fittings:
pipe - 12 feet galvanized, 18 feet black iron
valves - 2 globe
fittings: 1. Galvanized - 3 elbows, 1 tee, 1 union, 3 close nipples
2. Black iron - 10 elbows, 5 unions, 3 tees, 2 street ells, 6 close nipples

e. Miscellaneous fittings:
bushings - 4 1/2 inch to 3/8 inch, 2 3/8 inch to 1/4 inch, 1 1 inch to 3/4 inch
reducing couplings - 3 3/8 inch to 1/4 inch, 2 2 inch to 1 inch, 1 1 1/2 inch to 1 inch
reducing elbow - 1 1 1/2 inch to 1 inch
rubber tubing - 2 feet of 3/8 inch, 3 feet of 1/4 inch

Miscellaneous Materials.
angle iron - 2 feet of 2 inch, 13 feet of 1 1/4 inch, 17 feet of 1 1/2 inch, 3 feet of 1 inch
strap iron - 3 feet of 1 inch
iron rod - 10 feet of 3/8 inch
solder - 8 pounds
wood - 60 feet of 2 inch x 8 inch

Air Preheaters. One one-row and one two-row extended surface heating units, size 600, having heating surfaces of 16 square feet and 30 square feet, respectively, and purchased from the B. F. Sturtevant Company of Boston, Massachusetts, were used to preheat the drying air. High-pressure steam was the heating medium used in these heaters, and they had a maximum operating pressure of 300 pounds per square inch gauge. These heaters were rated to heat 500 cubic feet of air per minute (standard temperature and pressure) to 226° F. and 1000 cubic feet of air per minute (standard temperature and pressure) to 157° F. when operating with a steam pressure of 50 pounds per square inch gauge.

Fan. A Sturtevant "Silentvane" fan, size 57 1/2, single width, single inlet, with a wheel diameter of 13 inches was used to circulate the drying air. This fan has a capacity of 2330 cubic feet per minute when operated under a total head of 5 1/2 inches water pressure at 2500 RPM (standard temperature and pressure). The fan was purchased from the B. F. Sturtevant Company of Boston, Massachusetts.

Motor. A "Craftsman" three phase electric motor, 2 h.p., 60 cycles, 220/440 volts, 5.6/2.8 amperes, catalogue number 5687, serial number 844703-99, purchased from the Sears, Roebuck and Company of Philadelphia, Pennsylvania, was used to drive the Sturtevant fan. A v-belt drive was used with a 5 inch pulley on the motor and a 3 1/2 inch pulley on the fan.

Air Compressor. The compressed air for the atomizer was supplied by a Nash Hytor, size AL-574, 3500 RPM. This unit was manufactured by the Nash Engineering Company, South Norwalk, Connecticut. It was driven by a Western Electric 15 h.p. induction motor operating on 220 volt, 3 phase, 60 cycle alternating current. A direct multiple v-belt was used

to operate the motor at 1740 RPM.

Thermometers. Two glass laboratory thermometers (20-220° F) were wrapped with wicking and used to measure the inlet and outlet wet bulb temperatures of the chamber. Provisions were made to keep the wicks damp.

One glass laboratory thermometer was used to get the outlet dry bulb temperature of the air from the chamber.

Three Weston Dial thermometers (50-300° F) were used. One was used to measure the temperature of the steaming air, the second, to measure the inlet air dry bulb temperature, and the third, to measure the feed temperature.

A Taylor "Humiguide" was placed at the "make-up" air duct to determine the humidity of the "make-up" air.

Turbidity Meter. This instrument was constructed from odd fittings as shown in drawing 4 . A Weston Master Photoelectric Exposure Meter was used to measure the intensity of the light. The voltage supplied to a 150 watt bulb was varied with a 500 ohm variable resistance and measured by a 0-150 volt AC voltmeter, manufactured by the Cambosco Scientific Company, Waverly, Massachusetts. Six matched Kimbal "Exax" Nessler tubes were used to determine the settling rates.

Timer. An Eastman Kodak timer was used to time the runs on the drier, and to measure the intervals when turbidity meter readings were made.

Anemometer. A Friez anemometer was used to measure the air velocity entering the system. J. F. Friez, Baltimore, Maryland.

Pitot Tube. A standard pitot tube (no identification) was used with

a Merian draft-gauge, manufactured by the Merian Company of Cleveland, Ohio, was used to measure the air velocity in the ducts.

Viscometer. The viscosity of the kerosene was measured with an Ostwald viscometer manufactured by the Chicago Apparatus Company, Chicago, Illinois.

Balances. The product was weighed on a "Chao" two kilogram balance, manufactured by the Chemical Rubber Company, 1900 W. 112th Street, Cleveland Ohio. Samples were weighed for laboratory work on a "Will" chainomatic analytical balance manufactured by the Will Corporation, Rochester, New York.

F. Methods of Procedure

Previous attempts to operate the drier had not been successful. A former thesis on this unit indicated that the nozzle used was far from ideal. Trouble had been experienced with clogging and back pressure developing in the liquid feed line. A recommendation suggested that the duct work be altered to provide more drying air behind the atomizer. No provisions had been made to collect the product from the system. Another recommendation indicated that a platform should be constructed at the top of the drier to make the upper zone of the drier accessible for operation and cleaning.

A great deal of the time allotted for this project was devoted to making the suggested changes and other changes that were deemed necessary by problems which developed. A new type of nozzle was developed which operated successfully in subsequent tests. The final design was the result of many trials and errors. Various lengths and diameters were tried for the inner liquid nozzle before the final form (p. 31 and drawing 3) was developed. Alterations in the duct work provided a line directly from the main air duct to the chamber behind the atomizer, air flow control dampers, and a closed dust collecting system. An open system was tried using first the cyclone separator alone, then the bag filter alone, then, finally, both together in series. All of these tests were unsuccessful in that the chamber operated under a positive pressure (4 in. of water) and the light construction of the unit made it impossible to seal leaks for these conditions economically. Consequently, the closed system was installed and operated successfully. The pump formerly used in the feed system was not available, so a smaller pump, better adapted to the service,

was installed with a new feed tank.

The platform was constructed at the top of the drier as suggested and all of the controls were mounted there on a centralized control panel.

Preliminary Adjustments. The dampers were adjusted so the chamber would operate under a slightly negative pressure, and the atomizer would wet the regions where the sides and bottom of the chamber met. Then the drier was set for these conditions, dusty operating conditions were eliminated and the best drying conditions were realized. Particles from the atomizer traveled the longest possible path before coming in contact with the chamber. Distribution of the drying medium was measured and the results are given in Table 32 .

Operating Data. Data was acquired operating under the conditions stated in the Plan of Investigation (p. 26).

Feed Solution. Five gallons of stock solution were made at one time and the weight of anhydrous sodium sulphate was determined by drying two 25 cc samples from the batch in a laboratory drying oven for forty-eight hours. The average weight of anhydrous material remaining was used to calculate the weight of anhydrous salt per liter. The batch of material used was indicated by the series number of each run, and the above analyses of the batches are recorded in Table 30 .

Bulk Density. The bulk density of the material was determined by putting 10.0000 grams of the product into a 50 volumetric flask. Then the volume was determined by measuring the volume of turbidimeter fluid required to increase the total volume of the mixture to 50 cc. The results were recorded in Tables 1-29

Moisture Content. Moisture content was determined by measuring the loss in weight on an analytical balance when a one to three gram sample was dried for twenty-four hours in a laboratory oven. These results are recorded in Tables 1-29

Particle Size Distribution. Particle size distribution was determined according to a method used by the American Society for Testing Materials for finding the distribution of particle size in cement samples. The apparatus was constructed to conform as closely as possible to the Society's equipment. It is illustrated in drawing 4 . The voltage required to deflect the photoelectric cell to .8 candle power was taken every minute for fifteen successive minutes after inserting the Beaker tube containing a well-mixed, freshly prepared solution of one gram of sample made up to 50 cc with the turbidimeter solution. Readings were then taken at two to five minute intervals until the solution was clear. (From the calibration curve this will be seen to be at fifty volts.)

The turbidimeter fluid was distilled kerosene (first half cut after boiling point had reached 100° C) with 0.5 grams Aerosol OT per gallon.

G. Experimental Data

The data accumulated will now be tabulated. Four series of tests were made on the drier, the first two being preliminary and they were not recorded. Series three and four were run on the drier with the variables indicated in each table. Two main differences existed between these runs: 1) the concentration of the stock solution (considered 100 per cent saturated) varied; 2) the room humidity was lower in the third series. The stock solution contained 175.3 grams of sodium sulphate per liter for the third series, whereas, for series four the concentration was 155.1 grams per liter. The humidity ranges were 22-25 in the first case, and 53-55 in the second case. Tables "a" list experimental data. The laboratory data is listed in tables "b", which follow the "a" table for each run.

This series of tables is followed by a table of preliminary laboratory determinations, and then a section of sample calculations. Turbidity meter calibration curves are given here and the method of determining the specific surface factor is described. The results of microscopic examinations are recorded at the end of this section.

TABLE 1a

Spray Drying with Atomizing Air at 95° F
Operating Data

Series	3	Concentration	100%
Run No.	1	Amount	1 liter
Date	4-6-42	Wt. Product	38 gms
Material	Na_2SO_4	Room Humidity	28%

Time (min)	Temperatures (°F)						Pressures (lbs. per sq. in.)	
	Inlet Air		Outlet Air		Atomiz. Air	Feed	Air at Nozzle	Steam
	D. B.	W. B.	D. B.	W. B.				
0					96	90	16	67
1	228	103			95	90	15	67
3	228	102	137	98	94	90	16	67
6	230	103	133	100	94	90	15	67
8	229	104	133	99	93	90	15	67
9	228	104	133	99	92	90	15	67

REMARKS: The unit was dried thoroughly before starting run. Product had tendency to ball.

TABLE 1b

Spray Drying with Atomizing Air at 95° F
Product Analysis

Transmittancy Constant 0.955

Stokes Law Constant 15,000

Particle Size Determination				
Time (min)	Volts	Illumination (Candlepower)	Size *	Concentration (%)
0	88	9.0	———	100.0
1	88	8.6	14.5	95.5
2	84	8.0	11.0	95.3
3	83	7.0	8.5	90.3
4	81	6.5	7.4	85.7
5	78	5.6	6.6	81.5
6	75	5.0	6.0	76.2
7	71	4.3	5.6	68.6
8	66	3.0	5.2	61.9
9	61	2.2	4.9	45.8
10	58	1.8	4.7	35.2
11	57	1.6	4.5	32.4
12	55	1.4	4.3	24.8
13	54	1.3	4.1	20.9
14	54	1.3	3.9	20.9
15	55	1.2	3.8	17.2
17	55	1.2	3.6	17.2
20	53	1.1	3.3	12.4
22	51	1.0	3.1	6.7
30	50	0.8	2.7	0.0

Moisture Determination			Bulk Density		
Wt. Sample	Wt. Dry Sample	Moisture	Wt. Sample	Volume	Bulk Density
2.0665 gms	2.0534 gms	0.623 %	10.0 gms	4.0 cc	2.5 gms / cc

* Size = Maximum particle diameter in microns.

TABLE 2a

Spray Drying with Atomizing Air at 170° F
Operating Data

Series 5
Run No. 2
Date 4-6-42
Material Na_2SO_4

Concentration 100%
Amount 1 liter
Wt. Product 38 gms
Room Humidity 28 %

Time (min)	Temperatures (°F)						Pressures (lbs. per sq. in.)	
	Inlet Air		Outlet Air		Atomiz. Air	Feed	Air at Nozzle	Steam
	D. B.	W. B.	D. B.	W. B.				
0						78	16	63
3	235	105	130	100	174	78	[illegible]	63
4	234	106	139	102	168	78	15	63
6	233	107	35	104	170	78	15	63
6.5	Shut Down							

REMARKS: Nozzle cleaned before each run. Atomizing air cold at start of run, while heat exchanger came to heat. Product poured well.

TABLE 2b

Spray Drying with Atomizing Air at 170° F
Product Analysis

Transmittance Constant 0.918

Stokes Law Constant 18,000

Particle Size Determination				
Time (min)	Volts	Illumination (Candlepower)	Size *	Concentration (%)
0	91	9.7	----	100.0
1	91	9.7	14.5	100.0
2	89	9.0	11.0	96.3
3	88	8.8	9.5	94.8
4	86	8.0	7.4	91.8
5	81	6.5	6.5	85.5
6	76	5.2	6.0	75.2
7	71	4.2	5.5	66.1
8	66	3.2	5.2	58.0
9	62	2.4	4.9	44.8
10	58	1.8	4.7	34.9
11	55	1.4	4.5	24.9
12	53	1.2	4.3	16.5
13	52	1.1	4.1	11.9
14	52	1.1	3.9	11.9
15	51	1.0	3.8	6.4
17	50	0.8	3.6	0.0

Moisture Determination			Bulk Density		
Wt. Sample	Wt. Dry Sample	Moisture	Wt. Sample	Volume	Bulk Density
2.0744 gms	2.0614 gms	0.627 %	10.0 gms	4.2 cc	2.38 gms / cc

* Size = Maximum particle diameter in microns.

TABLE 3a

Spray Drying with Atomizing Air at 200° F
Operating Data

Series	3	Concentration	100%
Run No.	3	Amount	1 liter
Date	4-6-42	Wt. Product	39 gms
Material	Na_2SO_4	Room Humidity	22%

Time (min)	Temperatures (°F)						Pressures (lbs. per sq. in.)	
	Inlet Air		Outlet Air		Atomiz. Air	Feed	Air at Nozzle	Steam
	D. B.	W. B.	D. B.	W. B.				
0					200	92	15	70
1	236	106	159	104	190	92	15	70
3	234	106	159	102	212	99	15	70
5	234	104	140	100	200	92	15	70
6					190	92	15	70
7					230	92	15	70
8	232	106	134	102	222	92	15	65

REMARKS: Product poured well.

TABLE 3b

Spray Drying with Atomizing Air at 200° F
Product Analysis

Transmittancy Constant 0.975

Stokes Law Constant 13,000

Particle Size Determination				
Time (min)	Volts	Illumination (Candlepower)	Size*	Concentration (%)
0	88	8.6	----	100.0
1	87	8.3	14.5	98.0
2	86	8.0	11.0	97.5
3	84	7.2	8.5	93.2
4	81	6.5	7.4	87.8
5	79	5.9	6.6	84.5
6	75	5.0	6.0	77.3
7	69	3.8	5.6	64.7
8	64	2.8	5.2	53.2
9	60	2.1	4.9	41.5
10	57	1.6	4.7	32.8
11	55	1.4	4.5	27.0
12	54	1.3	4.3	21.3
13	54	1.3	4.1	21.3
14	54	1.3	3.9	21.3
15	53	1.2	3.8	17.4
17	53	1.2	3.6	17.4
20	52	1.1	3.3	12.5
22	51	1.0	3.1	7.0
25	51	1.0	3.0	7.0
35	50	0.8	2.5	0.0

Moisture Determination			Bulk Density		
Wt. Sample	Wt. Dry Sample	Moisture	Wt. Sample	Volume	Bulk Density
2.1752 gms	2.1634 gms	0.59 %	10.0 gms	4.0 cc	2.5 gms / cc

* Size = Maximum particle diameter in microns.

TABLE 4a

Spray Drying with Feed at 75° F
Operating Data

Series	4	Concentration	100%
Run No.	1	Amount	1 liter
Date	4-26-42	Wt. Product	42 gms
Material	Na_2SO_4	Room Humidity	58%

Time (min)	Temperatures (°F)						Pressures (lbs. per sq. in.)	
	Inlet Air		Outlet Air		Atomiz. Air	Feed	Air at Nozzle	Steam
	D. B.	W. B.	D. B.	W. B.				
2	236	102	125	101	254	75	15	72
3	236	102	125	101	254	75	15	72
4	236	109	122	102	254	75	15	72
5			Shut	Down				

REMARKS: O-press hard to control.

TABLE 4b

Spray Drying with Feed at 75° F
Product Analysis

Transmittancy Constant 0.065

Stokes Law Constant 13,000

Particle Size Determination				
Time (min)	Volts	Illumination (Candlepower)	Size *	Concentration (%)
0	87	8.3	----	100.0
1	87	8.3	14.5	100.0
2	86	8.0	11.0	98.5
3	83	7.0	8.5	98.5
4	79	5.9	7.4	86.2
5	77	5.4	6.6	82.2
6	71	4.2	6.0	70.9
7	66	3.2	5.6	59.1
8	62	2.4	5.2	49.2
9	58	1.8	4.9	36.4
10	56	1.4	4.7	25.6
11	54	1.3	4.6	21.7
13	53	1.2	4.3	17.7
14	52	1.1	3.9	12.9
17	52	1.1	3.6	12.9
37	50	0.8	2.4	0.0

Moisture Determination			Bulk Density		
Wt.Sample	Wt.Dry Sample	Moisture	Wt. Sample	Volume	Bulk Density
2.0943 gms	2.0801 gms	0.67 %	10.0 gms	4.5 cc	2.2 gms / cc

* Size = Maximum particle diameter in microns.

TABLE 5a

Spray Drying with Atomizing Air at 250° F and Feed at 94° F
Operating Data

Series	3	Concentration	100%
Run No.	4	Amount	1 liter
Date	4-6-42	Wt. Product	39 gms
Material	Na_2SO_4	Room Humidity	28%

Time (min)	Temperatures (°F)						Pressures (lbs. per sq. in.)	
	Inlet Air		Outlet Air		Atomiz. Air	Feed	Air at Nozzle	Steam
	D. B.	W. B.	D. B.	W. B.				
2	233	106	122	101	251	94	15	60
4	233	106	122	102	251	94	15	60
6	233	103			251	94	15	60

TABLE 5b

Spray Drying with Feed at 94° F
Product Analysis

Transmittancy Constant 1.05

Stokes Law Constant 15,000

Particle Size Determination				
Time (min)	Volts	Illumination (Candlepower)	Size *	Concentration (%)
0	83	7.0	———	100.0
1	83	7.0	14.5	100.0
2	82	6.8	11.0	97.9
3	78	5.6	8.5	90.0
4	77	5.4	7.4	87.3
5	74	4.8	6.5	82.8
6	71	4.2	6.0	75.8
7	67	3.1	5.6	66.4
8	66	2.8	5.2	63.2
9	62	2.4	4.9	52.7
10	59	1.9	4.6	42.2
11	57	1.6	4.4	35.8
12	56	1.5	4.2	31.6
13	55	1.4	4.1	27.4
14	54	1.3	3.9	22.1
15	54	1.2	3.8	21.1
17	53	1.2	3.5	12.9
20	52	1.0	3.3	10.5
22	51	1.0	3.1	7.4
25	51	1.0	2.9	7.4
29	51	1.0	2.9	7.4
37	50	0.8	2.4	0.0

Moisture Determination			Bulk Density		
Wt. Sample	Wt. Dry Sample	Moisture	Wt. Sample	Volume	Bulk Density
1.4272 gms	1.4196 gms	0.53%	10.0 gms	4.5 cc	2.2 gms / cc

* Size = Maximum particle diameter in microns.

TABLE 6a

Spray Drying with Feed at 130° F
Operating Data

Series	S	Concentration	100%
Run No.	5	Amount	1 liter
Date	4-7-42	Wt. Product	82 gms
Material	$MgSO_4$	Room Humidity	34%

Time (min)	Temperatures (°F)						Pressures (lbs. per sq. in.)	
	Inlet Air		Outlet Air		Atomiz. Air	Feed	Air at Nozzle	Steam
	D. B.	W. B.	D. B.	W. B.				
1	237	111	142	109	252	130	15	64
3	237	113	135	110	252	127	15	64
4	237	112	138	108	Shut Down			

TABLE 6 b

Spray Drying with Feed at 130° F
Product Analysis

Transmittancy Constant 0.918

Stokes Law Constant 13,000

Particle Size Determination				
Time (min)	Volts	Illumination (Candlepower)	Size *	Concentration (%)
0	91	9.7	——	100.0
1	91	9.7	14.5	100.0
2	91	9.7	11.0	100.0
3	90	9.3	8.5	98.2
4	88	8.6	7.4	94.8
5	85	7.6	6.6	90.0
6	80	6.2	6.0	81.7
7	77	5.3	5.6	76.2
8	71	4.2	5.2	66.1
9	68	3.5	4.9	58.7
10	64	2.8	4.7	50.5
11	61	2.2	4.5	42.2
12	60	2.0	4.3	38.6
13	58	1.8	4.1	34.0
14	58	1.8	3.9	34.0
15	56	1.5	3.8	27.5
17	56	1.5	3.6	27.5
20	53	1.2	3.3	16.5
22	52	1.1	3.2	11.9
25	51	1.0	3.0	6.4
29	51	1.0	2.9	6.4
37	50	0.8	2.4	0.0

Moisture Determination			Bulk Density		
Wt. Sample	Wt. Dry Sample	Moisture	Wt. Sample	Volume	Bulk Density
2.8865 gms	2.8696 gms	0.59 %	10.0 gms	4.1 cc	2.4 gms / cc

* Size = Maximum particle diameter in microns.

TABLE 7a

Spray Drying with Feed at 145° F
Operating Data

Series	4	Concentration	100%
Run No.	2	Amount	1 liter
Date	4-25-42	Wt. Product	48 gms
Material	$MgSO_4$	Room Humidity	59%

Time (min)	Temperatures (°F)						Pressures (lbs. per sq. in.)	
	Inlet Air		Outlet Air		Atomiz. Air	Feed	Air at Nozzle	Steam
	D. B.	W. B.	D. B.	W. B.				
0					254	145	15	72
1	236	108	116	102	254	144	15	72
3	235	110	116	104	254	141	15	72
4			Shut	Down				

TABLE 7b

Spray Drying with Feed at 145° F
Product Analysis

Precipitancy Constant 1.000

Stokes Law Constant 13,000

Particle Size Determination				
Time (min)	Volts	Illumination (Candlepower)	Size *	Concentration (%)
0	86	8.0	——	100.0
1	85	7.6	14.5	98.0
2	84	7.2	11.0	96.5
3	81	6.5	8.5	91.0
4	79	5.9	7.4	87.5
5	76	5.2	6.6	82.0
6	73	4.6	6.0	76.0
7	70	4.0	5.6	70.0
8	65	3.0	5.2	58.0
9	61	2.2	4.9	46.0
10	58	1.8	4.7	37.0
11	57	1.6	4.5	34.0
12	54	1.3	4.3	22.0
13	53	1.2	4.1	18.0
20	52	1.1	3.3	13.0
31	51	1.0	2.6	7.0
37	50	0.8	2.4	0.0

Moisture Determination			Bulk Density		
Wt.Sample	Wt.Dry Sample	Moisture	Wt. Sample	Volume	Bulk Density
2.0225 gms	2.0139 gms	0.67 %	10.0 gms	4.6 cc	2.2 gms / cc

* Size = Maximum particle diameter in microns.

TABLE 8a

Spray Drying with Feed at 150° F
Operating Data

Series	3	Concentration	100%
Run No.	6	Amount	1 liter
Date	4-7-42	Wt. Product	19 gms
Material	Na_2SO_4	Room Humidity	55%

Time (min)	Temperatures (°F)						Pressures (lbs. per sq. in.)	
	Inlet Air		Outlet Air		Atomiz. Air	Feed	Air at Nozzle	Steam
	D. B.	W. B.	D. B.	W. B.				
1	258	110	142	114	252	149	15	65
3	254	111	142	112	252	145	15	65
4	254	111	142	112	252	145	15	65
4				Shut	Down			

TABLE 8b

Spray Drying with Feed at 150° F
Product Analysis

Transmittancy Constant 0.924

Stokes Law Constant 13,000

Particle Size Determination				
Time (min)	Volts	Illumination (Candlepower)	Size*	Concentration (%)
0	90	9.3	——	100.0
1	90	9.3	14.5	100.0
2	89	9.0	11.0	98.0
3	85	7.6	8.5	91.5
4	79	5.9	7.4	82.7
5	72	4.4	6.6	69.2
6	67	3.4	6.0	59.0
7	63	2.6	5.6	48.6
8	60	2.1	5.2	40.2
9	58	1.8	4.9	34.6
10	57	1.7	4.7	31.8
11	56	1.5	4.5	28.1
12	55	1.4	4.3	24.3
13	55	1.4	4.3	24.3
14	55	1.4	3.9	22.4
15	54	1.3	3.8	18.7
17	52	1.1	3.5	12.1
20	50	0.8	3.3	0.0

Moisture Determination			Bulk Density		
Wt. Sample	Wt. Dry Sample	Moisture	Wt. Sample	Volume	Bulk Density
1.9490 gms	1.9376 gms	0.59 %	10.0 gms	4.1 cc	2.4 gms / cc

* Size = Maximum particle diameter in microns.

TABLE 9a

Spray Drying with Feed at 162° F
Operating Data

Series	4	Concentration	100%
Run No.	5	Amount	1 liter
Date	4-26-42	Wt. Product	61 gms
Material	Na_2SO_4	Room Humidity	55%

Time (min)	Temperatures (°F)						Pressures (lbs. per sq. in.)	
	Inlet Air		Outlet Air		Atomiz. Air	Feed	Air at Nozzle	Steam
	D. B.	W. B.	D. B.	W. B.				
0						162		
1	239	106	137	104	253	157	15	72
3	238	105	136	102	253	156	15	72
5	236	108	135	101	253	153	15	72
5 1/2			Shut	Down				

TABLE 9b

Spray Drying with Feed at 160° F
Product Analysis

Transmittancy Constant 1.035

Stokes Law Constant 13,000

Particle Size Determination				
Time (min)	Volts	Illumination (Candlepower)	Size *	Concentration (%)
0	84	7.8	———	100.0
1	84	7.8	14.5	100.0
2	83	7.0	11.0	98.5
3	81	6.5	8.5	94.3
4	80	6.2	7.4	92.2
5	77	5.4	6.6	85.5
6	72	4.4	6.0	76.7
7	67	3.4	5.6	65.3
8	63	2.6	5.2	53.9
9	58	1.8	4.9	38.4
10	56	1.5	4.7	31.1
11	54	1.3	4.5	22.8
12	53	1.2	4.3	18.7
17	52	1.1	3.6	13.5
20	52	1.1	3.3	13.5
31	51	1.0	2.6	7.3
37	50	0.8	2.4	0.0

Moisture Determination			Bulk Density		
Wt.Sample	Wt.Dry Sample	Moisture	Wt. Sample	Volume	Bulk Density
2.2056 gms	2.2537 gms	0.74 %	10.0 gms	4.7 cc	2.1 gms / cc

* Size = Maximum particle diameter in microns.

TABLE 10 a

Spray Drying with Feed at 180° F
Operating Data

Series	3	Concentration	100%
Run No.	7	Amount	1 liter
Date	4-3-42	Wt. Product	41 gms
Material	Na_2SO_4	Room Humidity	26%

Time (min)	Temperatures (°F)						Pressures (lbs. per sq. in.)	
	Inlet Air		Outlet Air		Atomiz. Air	Feed	Air at Nozzle	Steam
	D. B.	W. B.	D. B.	W. B.				
1	250	104	142	105	250	180	15	65
3	250	103	142	104	250	180	15	65
5	250	103	140	103	250	180	15	65
7	250	102	142	101	250	180	15	65

TABLE 10 b

Spray Drying with Feed at 180° F
Product Analysis

Transmittancy Constant 1.05

Stokes Law Constant 13,000

Particle Size Determination				
Time (min)	Volts	Illumination (Candlepower)	Size*	Concentration (%)
0	83	7.0	——	100.0
1	83	7.0	14.5	100.0
2	81	6.5	11.0	95.7
3	79	5.9	8.5	92.0
4	77	5.4	7.4	87.9
5	75	5.0	6.6	84.3
6	73	4.6	6.0	80.0
7	70	4.0	5.6	73.7
8	68	3.6	5.2	68.4
9	65	3.0	4.9	61.2
10	62	2.4	4.7	52.7
11	60	2.1	4.5	43.5
12	58	1.8	4.3	38.9
13	56	1.5	4.1	31.6
14	55	1.4	3.9	27.4
15	55	1.4	3.8	25.3
17	53	1.2	3.6	18.9
20	52	1.1	3.3	13.7
22	52	1.1	3.2	10.5
25	51	1.0	3.3	7.4
29	50	0.8	2.9	0.0

Moisture Determination			Bulk Density		
Wt. Sample	Wt. Dry Sample	Moisture	Wt. Sample	Volume	Bulk Density
1.9332 gms	1.9239 gms	0.48 %	10.0 gms	4.6 cc	2.2 gms / cc

* Size = Maximum particle diameter in microns.

TABLE 11a

Spray Drying with Feed at 200° F
Operating Data

Series	4	Concentration	100%
Run No.	4	Amount	1 liter
Date	4-26-48	Wt. Product	70 gms
Material	Mg_2SO_4	Room Humidity	55%

Time (min)	Temperatures (°F)						Pressures (lbs. per sq. in.)	
	Inlet Air		Outlet Air		Atomiz. Air	Feed	Air at Nozzle	Steam
	D. B.	W. B.	D. B.	W. B.				
0						197		
1	257	107	126	103	253	205	15	72
3	256	108	129	102	253	197	15	72
4	255	110	126	105	252		15	71
5			Shut	Down				

TABLE 11 d

Spray Drying with Feed at 200° F
Product Analysis

Transmittency Constant 1.035

Stokes Law Constant 12,000

Particle Size Determination				
Time (min)	Volts	Illumination (Candlepower)	Size *	Concentration (%)
0	84	7.2	———	100.0
1	83	7.0	14.3	96.5
2	81	6.5	11.0	94.3
3	79	5.9	9.5	90.6
4	75	5.0	7.4	83.0
5	73	4.6	6.6	73.8
6	69	3.8	6.0	69.5
7	65	3.0	5.6	60.3
8	61	2.2	5.2	47.7
9	58	1.8	4.9	39.4
10	56	1.5	4.7	31.1
11	55	1.4	4.6	27.0
12	54	1.3	4.5	22.8
13	53	1.2	4.1	15.7
20	52	1.1	3.3	13.5
31	51	1.0	2.6	7.3
37	50	0.8	2.1	0.0

Moisture Determination			Bulk Density		
Wt. Sample	Wt. Dry Sample	Moisture	Wt. Sample	Volume	Bulk Density
2.0399 gms	2.0262 gms	0.67 %	10.0 gms	4.5 cc	2.2 gms / cc

* Size = Maximum particle diameter in microns.

TABLE 12a

Spray Drying with Chamber Air at 100° F
Operating Data

Series	3	Concentration	100%
Run No.	8	Amount	1 liter
Date	4-8-42	Wt. Product	8 gms
Material	$MgSO_4$	Room Humidity	35%

Time (min)	Temperatures (°F)						Pressures (lbs. per sq. in.)	
	Inlet Air		Outlet Air		Atomiz. Air	Feed	Air at Nozzle	Steam
	D. B.	W. B.	D. B.	W. B.				
1	100	80	90	80	250	95	15	0
5	98	80	88	80	250	95	15	0

REMARKS: Chamber floor wet.

TABLE 12b

Spray Drying with Chamber Air at 100° F
Product Analysis

Transmittancy Constant 0.877

Stokes Law Constant 15,000

Particle Size Determination				
Time (min)	Volts	Illumination (Candlepower)	Size *	Concentration (%)
0	94	10.9	----	100.0
1	94	10.9	14.9	100.0
2	94	10.9	11.0	100.0
3	93	10.5	8.8	98.0
4	90	9.3	7.4	93.9
5	86	8.6	6.6	90.6
6	83	7.0	6.0	85.3
7	78	5.6	5.6	75.0
8	75	5.0	5.2	70.2
9	69	3.6	4.9	59.7
10	65	3.0	4.7	50.8
11	61	2.2	4.8	40.3
12	59	1.9	4.3	35.1
13	57	1.6	4.1	29.3
14	54	1.3	3.9	19.3
15	52	1.1	3.8	11.4
17	52	1.1	3.6	11.4
20	51	1.0	3.3	6.2
22	51	1.0	3.1	6.2
30	50	0.8	2.7	0.0

Moisture Determination			Bulk Density		
Wt. Sample	Wt. Dry Sample	Moisture	Wt. Sample	Volume	Bulk Density
1.7257 gms	1.7250 gms	0.38%	----	----	----

* Size = Maximum particle diameter in microns.

TABLE 13 a.

Spray Drying with Chamber Air at 150° F
Operating Data

Series	3	Concentration	100%
Run No.	9	Amount	1 liter
Date	4-8-42	Wt. Product	10 gms
Material	Na_2SO_4	Room Humidity	35%

Time (min)	Temperatures (°F)						Pressures (lbs. per sq. in.)	
	Inlet Air		Outlet Air		Atomiz. Air	Feed	Air at Nozzle	Steam
	D. B.	W. B.	D. B.	W. B.				
1	155	91	106	92	250	95	15	2
3	150	93	101	92	250	95	15	0
4	150	94	100	92	250	95	15	5
5	150	91	99	91	250	95	16	0
6	150	90	96	90	250	95	15	0
6				Shut Down				

TABLE 13b

Spray Drying with Chamber Air at 150° F
Product Analysis

Transmittancy Constant 0.893

Stokes Law Constant 13,000

Particle Size Determination				
Time (min)	Volts	Illumination (Candlepower)	Size *	Concentration (%)
0	93	10.5	———	100.0
1	92	10.1	14.5	99.0
2	91	9.7	11.0	97.3
3	91	9.7	8.5	97.3
4	90	9.3	7.4	95.5
5	88	8.6	6.6	87.5
7	82	6.8	5.6	63.1
8	81	6.5	5.2	61.5
9	76	5.2	4.9	74.0
10	74	4.8	4.7	70.6
11	71	4.2	4.5	64.3
12	67	3.4	4.3	56.3
13	65	3.0	4.1	51.8
14	64	2.8	3.9	49.0
15	62	2.4	3.8	45.6
17	59	1.9	3.6	35.6
20	56	1.5	3.3	28.5
22	53	1.2	3.1	17.9
25	52	1.1	3.0	11.6
30	51	1.0	2.7	8.9
37	50	0.8	2.4	0.0

Moisture Determination			Bulk Density		
Wt. Sample	Wt. Dry Sample	Moisture	Wt. Sample	Volume	Bulk Density
2.0005 gms	1.9901 gms	0.53 %	10.0 gms	4.0 cc	2.5 gms / cc

* Size = Maximum particle diameter in microns.

TABLE 14a

Spray Drying with Chamber Air at 180° F
Operating Data

Series	3	Concentration	100%
Run No.	10	Amount	1 liter
Date	4-8-42	Wt. Product	41 gms
Material	Na_2SO_4	Room Humidity	25%

Time (min)	Temperatures (°F)						Pressures (lbs. per sq. in.)	
	Inlet Air		Outlet Air		Atomiz. Air	Feed	Air at Nozzle	Steam
	D. B.	W. B.	D. B.	W. B.				
0	180				250	90	15	10
2	180	94	116	91	251	90	15	10
4	175	94	116	94	251	90	15	10
7	180	96	115	94	251	90	15	10
8				Shut	Down			

REMARKS: Nozzle operated at less than usual vacuum with no feed. (1/2 in. instead of 1 in Hg). Was clean however.

TABLE 14b

Spray Drying with Chamber Air at 180° F
Product Analysis

Transmittancy Constant 1.04

Stokes Law Constant 13,000

Particle Size Determination				
Time (min)	Volts	Illumination (Candlepower)	Size *	Concentration (%)
0	84	7.2	----	100.0
1	83	7.0	14.5	98.5
2	82	6.8	11.0	96.4
3	80	6.2	8.5	92.2
4	79	5.9	7.4	90.7
5	77	5.4	6.6	86.5
6	75	5.0	6.0	82.9
7	72	4.4	5.6	76.7
8	69	3.8	5.2	69.5
9	66	3.2	4.9	62.2
10	63	2.6	4.7	53.8
11	60	2.1	4.5	46.2
12	58	1.8	4.3	40.0
13	56	1.5	4.1	33.2
14	55	1.4	3.9	26.9
15	54	1.3	3.8	24.9
17	53	1.2	3.6	18.7
20	52	1.1	3.3	15.5
22	51	1.0	3.1	7.3
30	50	0.8	2.7	0.0

Moisture Determination			Bulk Density		
Wt.Sample	Wt.Dry Sample	Moisture	Wt.Sample	Volume	Bulk Density
1.9501 gms	1.9377 gms	0.64 %	10.0 gms	4.4 cc	2.3 gms / cc

* Size = Maximum particle diameter in microns.

TABLE 15a

Spray Drying with Chamber Air at 200° F
Operating Data

Series	4	Concentration	100%
Run No.	12	Amount	1 liter
Date	4-27-42	Wt. Product	59 gms
Material	Na_2SO_4	Room Humidity	55%

Time (min)	Temperatures (°F)						Pressures (lbs. per sq. in.)	
	Inlet Air		Outlet Air		Atomiz. Air	Feed	Air at Nozzle	Steam
	D. B.	W. B.	D. B.	W. B.				
2	200	106	114	102	251	85	15	55
3	200	105	115	100	251	85	16	50
5				Shut	Down			

TABLE 15 b

Spray Drying with Chamber Air at 200° F
Product Analysis

Transmittancy Constant 1.075

Stokes Law Constant 15,000

Particle Size Determination				
Time (min)	Volts	Illumination (Candlepower)	Size *	Concentration (%)
0	82	6.8	----	100.0
1	82	6.8	14.5	100.0
2	81	6.5	11.0	98.0
3	78	5.6	8.5	92.0
4	78	5.6	7.4	92.0
5	76	5.2	6.6	88.2
6	74	4.8	6.0	83.9
7	71	4.2	5.6	77.5
8	68	3.6	5.2	70.0
9	65	3.0	4.9	62.4
10	62	2.6	4.7	56.0
11	60	2.1	4.5	48.2
12	59	1.9	4.3	43.0
13	56	1.5	4.1	32.5
14	55	1.4	3.9	28.0
16	54	1.3	3.7	23.7
18	53	1.2	3.5	19.4
20	51	1.0	3.3	16.0
31	50	0.8	2.6	0.0

Moisture Determination			Bulk Density		
Wt. Sample	Wt. Dry Sample	Moisture	Wt. Sample	Volume	Bulk Density
1.9962 gms	1.9837 gms	0.50 %	10.0 gms	4.4 cc	2.3 gms / cc

* Size = Maximum particle diameter in microns.

TABLE 16 a

Spray Drying with 25% Salt Solution
Operating Data

Series	3	Concentration	25%
Run No.	11	Amount	4 liters
Date	4-9-43	Wt. Product	34.5 gms
Material	$MgSO_4$	Room Humidity	32%

Time (min)	Temperatures (°F)						Pressures (lbs. per sq. in.)	
	Inlet Air		Outlet Air		Atomiz. Air	Feed	Air at Nozzle	Steam
	D. B.	W. B.	D. B.	W. B.				
3					251	94	15	67
5	232	105	119	100	251	85	15	67
8	231	106	120	101	251	86	15	68
11	232	105	129	100	252	87	15	69
14	230	106	128	102	252		15	69
18	230	106	129	101	253	88	15	67
22	229	106	129	103	251	89	15	67
25	230	106	130	106	251		15	67
28	230	108	129	103	251	Shut	Down	

Remarks: Product was balled and pink in color. Produced little dust when screened.

TABLE 16 b

Spray Drying with Feed Concentration at 25%
Product Analysis

Transmittance Constant	1.08
Stokes Law Constant	15,000

Particle Size Determination				
Time (min)	Volts	Illumination (Candlepower)	Size *	Concentration (%)
0	82	6.8	----	100.0
1	82	6.8	14.5	100.0
2	81	6.5	11.0	97.8
3	78	5.6	8.5	92.0
4	78	5.6	7.4	92.0
5	77	5.4	6.6	89.8
6	75	5.0	6.0	86.0
7	73	4.6	5.6	81.7
8	71	4.2	5.2	77.4
9	70	4.0	4.9	75.5
10	65	3.0	4.7	62.4
11	63	2.6	4.5	55.4
12	61	2.2	4.3	49.4
13	60	2.1	4.1	46.2
14	58	1.8	3.9	39.8
15	57	1.6	3.8	36.6
17	56	1.5	3.6	32.5
20	54	1.3	3.3	23.7
22	53	1.2	3.1	19.4
25	52	1.1	3.0	14.0
32	51	1.0	2.9	7.5
37	50	0.8	2.4	0.0

Moisture Determination			Bulk Density		
Wt. Sample	Wt. Dry Sample	Moisture	Wt. Sample	Volume	Bulk Density
1.8848 gms	1.8067 gms	0.838 %	10.0 gms	4.4 cc	2.3 gms / cc

* Size = Maximum particle diameter in microns.

TABLE 17a

Spray Drying with Feed Concentration at 25%
Operating Data

Series	4	Concentration	25%
Run No.	5	Amount	4 liters
Date	4-26-62	Wt. Product	37 gms
Material	Na_2SO_4	Room Humidity	50%

Time (min)	Temperatures (°F)						Pressures (lbs. per sq. in.)	
	Inlet Air		Outlet Air		Atomiz. Air	Feed	Air at Nozzle	Steam
	D. B.	W. B.	D. B.	W. B.				
3	255	112	125	106	252	78	15	71
6	253	111	116	104	252	80	15	71
9	252	110	116	104	252	82	15	71
12	252	109	116	105	252	80	16	70
15	253	110	116	105	253	80	16	70
17			Shut	Down				

REMARKS: Chamber wall and floor wet. Washed out and dried chamber at end of run.

TABLE 17 b

Spray Drying with Feed Concentration at 25%
Product Analysis

Transmittency Constant	1.220
Stokes Law Constant	13,000

Particle Size Determination				
Time (min)	Volts	Illumination (Candlepower)	Size *	Concentration (%)
0	76	5.2	----	100.0
1	76	5.2	14.5	100.0
2	75	5.0	11.0	97.5
3	73	4.9	8.5	92.6
4	71	4.3	7.4	87.8
5	69	3.9	6.6	81.7
6	67	3.4	6.0	76.3
7	65	2.0	5.6	70.8
8	63	2.6	5.2	63.4
9	61	2.2	4.9	56.2
10	59	1.9	4.7	49.0
11	58	1.8	4.5	45.2
12	57	1.6	4.5	41.4
13	56	1.5	4.1	36.6
14	55	1.4	3.9	31.7
17	53	1.2	3.6	22.6
20	52	1.1	3.3	15.3
31	52	1.1	2.6	15.3
37	50	0.3	2.4	0.0

Moisture Determination			Bulk Density		
Wt.Sample	Wt.Dry Sample	Moisture	Wt. Sample	Volume	Bulk Density
2.0047 gms	1.9821 gms	1.16 %	10.0 gms	4.4 cc	2.3 gms / cc

* Size = Maximum particle diameter in microns.

TABLE 18a

Spray Drying with Feed Concentration at 40%
Operating Data

Series	4	Concentration	40%
Run No.	6	Amount	2 1/2 liters
Date	4-26-42	Wt. Product	56 gms
Material	Na_2SO_4	Room Humidity	55%

Time (min)	Temperatures (°F)						Pressures (lbs. per sq. in.)	
	Inlet Air		Outlet Air		Atomiz. Air	Feed	Air at Nozzle	Steam
	D. B.	W. B.	D. B.	W. B.				
3	222	107	116	100	226	85	16	71
6	221	108	116	100	222	85	15	71
9	220	108	114	100	222	86	15	71
11			Shut	Down				

REMARKS: Hand hole was accidentally left partially open.

TABLE 18b

Spray Drying with Feed Concentration at 40%
Product Analysis

Transmittancy Constant 1.148

Stokes Law Constant 13,000

Particle Size Determination				
Time (min)	Volts	Illumination (Candlepower)	Size *	Concentration (%)
0	80	6.2	———	100.0
1	80	6.2	14.5	100.0
2	79	5.9	11.0	98.5
3	78	5.6	8.8	96.0
4	76	5.2	7.4	92.1
5	75	5.0	6.6	89.8
6	72	4.4	6.0	83.2
7	69	3.8	5.6	75.5
8	66	3.2	5.2	67.4
9	65	3.0	4.9	65.2
10	61	2.2	4.7	51.7
11	60	2.1	4.5	48.3
12	58	1.8	4.3	41.5
13	56	1.6	4.1	35.7
14	55	1.4	3.9	29.2
15	54	1.3	3.8	24.7
17	53	1.2	3.6	20.3
18	52	1.1	3.5	14.6
30	51	1.0	3.3	7.9
31	50	0.8	2.8	0.0

Moisture Determination			Bulk Density		
Wt.Sample	Wt.Dry Sample	Moisture	Wt. Sample	Volume	Bulk Density
2.0417 gms	2.0184 gms	1.14 %	10.0 gms	4.3 cc	2.3 gms / cc

* Size = Maximum particle diameter in microns.

TABLE 19a

Spray Drying with 50% Salt Solution
Operating Data

Series:	5	Concentration	50%
Run No.	12	Amount	2 liters
Date	4-9-42	Wt. Product	13 gms
Material	Na_2SO_4	Room Humidity	52%

Time (min)	Temperatures (°F)						Pressures (lbs. per sq. in.)	
	Inlet Air		Outlet Air		Atomiz. Air	Feed	Air at Nozzle	Steam
	D. B.	W. B.	D. B.	W. B.				
3	234	110	134	111	252	94	15	65
5	234	111	129	110	252	94	15	65
7	233	110	128	108	252	94	15	65
8				Shut	Down			

REMARKS: Product damp. Nozzle pulled about 1/2 in. extra vacuum when tested without feed.

TABLE 19b

Spray Drying with Feed Concentration at 50%
Product Analysis

Transmittancy Constant 0.916

Stokes Law Constant 15,000

Particle Size Determination				
Time (min)	Volts	Illumination (Candlepower)	Size *	Concentration (%)
0	91	9.7	----	100.0
1	89	9.0	14.5	96.3
2	86	8.6	11.0	94.9
3	86	8.0	8.3	91.9
4	84	7.2	7.4	90.5
5	79	6.9	6.6	80.3
6	76	5.0	6.0	73.5
7	70	4.0	5.6	64.2
8	69	3.8	5.2	61.5
9	65	3.0	4.9	53.2
10	63	2.6	4.7	47.7
11	62	2.4	4.5	45.8
12	60	2.1	4.3	39.2
13	59	1.9	4.1	36.7
14	58	1.8	3.8	33.9
15	57	1.6	3.9	31.2
17	55	1.4	3.6	23.8
20	53	1.2	3.3	16.5
22	52	1.1	3.1	11.9
25	52	1.1	3.0	11.9
29	50	0.8	2.3	0.0

Moisture Determination			Bulk Density		
Wt. Sample	Wt. Dry Sample	Moisture	Wt. Sample	Volume	Bulk Density
1.0161 gms	1.3254 gms	0.69 %	10.0 gms	4.1 cc	2.4 gms / cc

* Size = Maximum particle diameter in microns.

TABLE 20a

Spray Drying with Feed Concentration at 60%
Operating Data

Series	4	Concentration	60%
Run No.	7	Amount	3 1/3 liters
Date	4-27-42	Wt. Product	44 gms
Material	Na_2SO_4	Room Humidity	55%

Time (min)	Temperatures (°F)						Pressures (lbs. per sq. in.)	
	Inlet Air		Outlet Air		Atomiz. Air	Feed	Air at Nozzle	Steam
	D. B.	W. B.	D. B.	W. B.				
2	256	110	186	107	252	65	15	71
4	254	112	180	104	252	65	15	71
6	253	110	118	104	252	65	15	71
7			Shut	Down				

TABLE 20b

Spray Drying with Feed Concentration at 60%
Product Analysis

Transmittancy Constant	1.100
Stokes Law Constant	15,000

Particle Size Determination				
Time (min)	Volts	Illumination (Candlepower)	Size *	Concentration (%)
0	81	6.5	----	100.0
1	81	6.5	14.5	100.0
2	79	5.9	11.0	96.0
3	79	5.9	8.5	96.0
4	77	5.4	7.4	91.8
5	74	4.8	6.6	85.7
6	72	4.4	6.0	81.3
7	69	3.8	5.6	75.7
8	64	2.8	5.2	60.5
9	62	2.4	4.9	55.0
10	59	1.9	4.7	44.0
11	56	1.5	4.5	33.0
12	54	1.3	4.3	24.2
13	53	1.2	4.1	19.8
15	52	1.1	3.8	14.3
19	51	1.0	3.5	7.7
31	50	0.8	2.6	0.0

Moisture Determination			Bulk Density		
Wt.Sample	Wt.Dry Sample	Moisture	Wt. Sample	Volume	Bulk Density
2.0574 gms	2.0514 gms	0.76 %	10.0 gms	4.3 cc	2.3 gms / cc

* Size = Maximum particle diameter in microns.

TABLE 21a

Spray Drying with 75% Salt Solution
Operating Data

Series	5	Concentration	75%
Run No.	13	Amount	2 liters
Date	4-9-43	Wt. Product	30 gms
Material	Na_2SO_4	Room Humidity	34%

Time (min)	Temperatures (°F)						Pressures (lbs. per sq. in.)	
	Inlet Air		Outlet Air		Atomiz. Air	Feed	Air at Nozzle	Steam
	D. B.	W. B.	D. B.	W. B.				
2	232	111	131	110	250	94	15	64
4	232	110	128	110	250	94	15	64
6		110	126	108	250	94	15	64
8	230	110	124	108	250	94	15	64
8.5				Shut	Down			

REMARKS: Above normal vacuum (2 in.) at 15
Product damp

TABLE 21b

Spray Drying with Feed Concentration at 78%
Product Analysis

Transmittancy Constant 0.085

Stokes Law Constant 13,000

Particle Size Determination				
Time (min)	Volts	Illumination (Candlepower)	Size *	Concentration (%)
0	87	8.5	----	100.0
1	85	8.0	14.8	98.5
2	85	7.6	11.0	76.8
3	82	6.8	8.5	91.8
4	78	5.6	7.4	84.2
5	75	5.0	6.0	78.8
6	71	4.2	6.0	71.0
7	68	3.6	5.6	64.0
8	65	3.0	5.2	57.2
9	62	2.4	4.9	49.2
10	60	2.1	4.7	42.3
11	58	1.8	4.5	36.3
12	57	1.6	4.3	33.8
13	57	1.6	4.1	33.8
14	56	1.5	3.9	29.6
15	55	1.4	3.8	25.6
17	54	1.3	3.6	21.7
20	51	1.0	3.3	5.9
22	50	0.8	3.1	0.0

Moisture Determination			Bulk Density		
Wt. Sample	Wt. Dry Sample	Moisture	Wt. Sample	Volume	Bulk Density
2.0247 gms	2.0095 gms	0.30 %	10.0 gms	4.2 cc	2.4 gms / cc

* Size = Maximum particle diameter in microns.

TABLE 22a

Spray Drying with 8 lbs. per sq. in. Atomizing Air
Operating Data

Series	3	Concentration	100%
Run No.	14	Amount	1 liter
Date	4-10-42	Wt. Product	17 gms
Material	Na_2SO_4	Room Humidity	32%

Time (min)	Temperatures (°F)						Pressures (lbs. per sq. in.)	
	Inlet Air		Outlet Air		Atomiz. Air	Feed	Air at Nozzle	Steam
	D. B.	W. B.	D. B.	W. B.				
1	233	104	146	104	255	96	8	67
4	232	104	145	105	255	96	8	67
6	232	104	143	105	255	96	8	67
8	232	104	143	105	254	96	8	66
9.5				Shut	Down			

TABLE 22b

Spray Drying with Atomizing Air Pressure at 6 lbs. per sq. in.
Product Analysis

Transmittancy Constant 0.[illegible]

Stokes Law Constant 13,000

Particle Size Determination				
Time (min)	Volts	Illumination (Candlepower)	Size *	Concentration (%)
0	89	9.0	———	100.0
1	87	8.5	14.6	96.7
2	87	8.3	11.9	96.7
3	82	7.6	8.3	93.4
4	82	7.6	7.4	[illegible]
5	80	7.0	6.6	90.5
6	79	6.9	6.0	88.3
7	76	5.8	5.6	78.1
8	74	4.8	5.2	74.8
9	70	4.0	4.9	66.7
10	67	3.6	4.7	60.0
11	64	2.8	4.5	53.4
12	61	2.3	4.3	45.6
13	60	2.1	4.1	43.0
14	59	1.9	3.9	38.1
15	58	1.8	3.8	35.2
17	56	1.5	3.6	28.6
20	54	1.3	3.3	21.0
22	53	1.2	3.1	17.8
25	52	1.1	3.0	12.4
30	52	1.1	2.9	6.7
37	50	0.8	2.4	0.0

Moisture Determination			Bulk Density		
Wt. Sample	Wt. Dry Sample	Moisture	Wt. Sample	Volume	Bulk Density
1.[illegible] gms	1.0704 gms	0.[illegible] %	10.0 gms	4.5 cc	2.2 gms / cc

* Size = Maximum particle diameter in microns.

TABLE 23a

Spray Drying with 10 lbs. per sq. in Atomizing Air
Operating Data

Series	3	Concentration	100%
Run No.	15	Amount	1 liter
Date	4-10-42	Wt. Product	24 gms
Material	Na_2SO_4	Room Humidity	31%

Time (min)	Temperatures (°F)						Pressures (lbs.per sq. in.)	
	Inlet Air		Outlet Air		Atomiz. Air	Feed	Air at Nozzle	Steam
	D. B.	W. B.	D. B.	W. B.				
2	232	104	132	100	220	80	10	65
4	232	105	139	98	250	80	10	65
6	250	105	139	99	253	80	10	65
7	230	105	139	99	253	Shut	Down	

REMARKS: Atomizing air was at 110 for first minute. Preheater steam tray fouled.

TABLE 23b

Spray Drying with Atomizing Air Pressure at 10 lbs. per sq. in.
Product Analysis

Transmittancy Constant 0.902

Stokes Law Constant 13,000

Particle Size Determination				
Time (min)	Volts	Illumination (Candlepower)	Size *	Concentration (%)
0	93	10.5	----	100.0
1	92	10.1	14.5	99.0
2	89	9.0	11.0	93.6
3	87	8.3	8.5	90.6
4	85	7.4	7.4	87.4
5	82	6.8	6.6	83.0
6	77	5.4	6.0	74.5
7	71	4.2	5.6	64.3
8	67	3.4	5.2	56.2
9	60	2.1	4.9	38.4
10	57	1.6	4.7	30.4
11	54	1.3	4.5	19.6
12	53	1.2	4.3	16.1
13	52	1.1	4.1	11.6
14	51	1.0	3.9	6.3
15	50	0.8	3.8	0.0

Moisture Determination			Bulk Density		
Wt.Sample	Wt.Dry Sample	Moisture	Wt.Sample	Volume	Bulk Density
2.6206 gms	2.6067 gms	0.53 %	10.0 gms	4.2 cc	2.4 gms / cc

* Size = Maximum particle diameter in microns.

TABLE 24a

Spray Drying with 10 lbs. per sq. in. Atomizing Air
Operating Data

Series	4	Concentration	100%
Run No.	8	Amount	1 liter
Date	4-27-42	Wt. Product	55 gms
Material	$MgSO_4$	Room Humidity	56%

Time (min)	Temperatures (°F)						Pressures (lbs. per sq. in.)	
	Inlet Air		Outlet Air		Atomiz. Air	Feed	Air at Nozzle	Steam
	D. B.	W. B.	D. B.	W. B.				
2	238	110	136	108	258	55	10	70
4	237	110	133	108	258	54	10	70
6			Shut	Down				

REMARKS: Wet one-fourth of chamber floor.

TABLE 24b

Spray Drying with Atomizing Air Pressure at 10 lbs. per sq. in.
Product Analysis

Transmittancy Constant	1.040
Stokes Law Constant	13,000

Particle Size Determination				
Time (min)	Volts	Illumination (Candlepower)	Size *	Concentration (%)
0	85	7.6	———	100.0
1	85	7.6	14.5	100.0
2	83	7.0	11.0	97.0
3	81	6.5	8.5	92.0
4	79	5.9	7.4	89.5
5	75	5.0	6.6	81.7
6	71	4.2	6.0	73.3
7	69	3.8	5.6	68.4
8	67	3.4	5.2	64.2
9	64	2.8	4.9	56.2
10	61	2.2	4.7	47.0
11	60	2.0	4.5	43.8
12	58	1.8	4.3	37.6
13	56	1.5	4.1	30.6
14	55	1.4	3.9	26.5
15	54	1.3	3.8	22.4
17	53	1.2	3.6	18.4
20	52	1.1	3.3	13.3
24	51	1.0	3.0	7.2
37	50	0.8	2.4	0.0

Moisture Determination			Bulk Density		
Wt.Sample	Wt.Dry Sample	Moisture	Wt. Sample	Volume	Bulk Density
2.0625 gms	2.0463 gms	0.77 %	10.0 gms	4.1 cc	2.4 gms / cc

* Size = Maximum particle diameter in microns.

TABLE 25a

Spray Drying with 17 lbs. per sq. in. Atomizing Air
Operating Data

Series	4	Concentration	100%
Run No.	8	Amount	1 liter
Date	4-27-42	Wt. Product	59 gms
Material	Na_2SO_4	Room Humidity	55%

Time (min)	Temperatures (°F)						Pressures (lbs. per sq. in.)	
	Inlet Air		Outlet Air		Atomiz. Air	Feed	Air at Nozzle	Steam
	D. B.	W. B.	D. B.	W. B.				
1	255	110	123	110	251	65	17	71
3	252	110	120	105	251	65	17	71
4			Shut	Down				

TABLE 25b

Spray Drying with Atomizing Air Pressure at 17 lbs. per sq. in.
Product Analysis

Transmittancy Constant	1.035
Stokes Law Constant	18,000

Particle Size Determination				
Time (min)	Volts	Illumination (Candlepower)	Size *	Concentration (%)
0	84	7.2	———	100.0
1	83	7.0	14.5	98.5
2	82	6.8	11.0	96.3
3	79	5.9	8.5	90.5
4	78	5.6	7.4	88.5
5	76	5.2	6.6	85.0
6	71	4.2	6.0	74.6
7	69	3.8	5.6	69.4
8	68	3.6	5.2	67.4
9	65	3.0	4.9	60.2
10	62	2.4	4.7	51.6
11	56	1.9	4.5	41.4
12	57	1.6	4.3	33.2
13	55	1.4	4.1	26.9
14	53	1.2	3.9	18.6
17	52	1.1	3.6	13.5
24	51	1.0	3.0	7.3
37	50	0.8	2.4	0.0

Moisture Determination			Bulk Density		
Wt. Sample	Wt. Dry Sample	Moisture	Wt. Sample	Volume	Bulk Density
1.9963 gms	1.9824 gms	0.71 %	10.0 gms	4.2 cc	2.4 gms / cc

* Size = Maximum particle diameter in microns.

TABLE 26a

Spray Drying with 20 lbs. per sq. in. Atomizing Air
Operating Data

Series	3	Concentration	100%
Run No.	16	Amount	1 liter
Date	4-10-42	Wt. Product	32 gms
Material	Na_2SO_4	Room Humidity	32%

Time (min)	Temperatures (°F)						Pressures (lbs. per sq. in.)	
	Inlet Air		Outlet Air		Atomiz. Air	Feed	Air at Nozzle	Steam
	D. B.	W. B.	D. B.	W. B.				
1	232	112	126	109	246	85	20	62
3	230	112	122	108	246	85	20	62
4				Shut	Down			

REMARKS: Product damp. Nozzle cleaned well before run.

TABLE 26b

Spray Drying with Atomizing Air Pressure at 80 lbs. per sq. in.
Product Analysis

Transmittancy Constant	0.985
Stokes Law Constant	13,000

Particle Size Determination				
Time (min)	Volts	Illumination (Candlepower)	Size *	Concentration (%)
0	87	8.5	——	100.0
1	87	8.3	14.8	100.0
2	85	7.6	11.0	96.5
3	81	6.5	8.5	89.7
4	78	5.6	7.4	84.2
5	73	4.6	6.6	75.0
6	69	3.8	6.0	66.0
7	65	3.0	5.6	57.2
8	63	2.6	5.2	51.2
9	59	1.9	4.9	39.4
10	58	1.8	4.7	34.5
11	56	1.5	4.5	29.6
12	55	1.4	4.3	25.6
13	55	1.4	4.1	25.6
14	53	1.2	4.1	17.7
15	53	1.2	3.8	17.7
17	52	1.2	3.[illegible]	17.7
20	51	1.0	3.5	6.9
22	51	1.0	3.1	6.9
25	50	0.8	3.0	0.0

Moisture Determination			Bulk Density		
Wt.Sample	Wt.Dry Sample	Moisture	Wt.Sample	Volume	Bulk Density
2.5360 gms	2.5044 gms	0.47 %	10.0 gms	4.1 cc	2.4 gms / cc

* Size = Maximum particle diameter in microns.

TABLE 279

Spray Drying with 23 lbs. per sq. in. Atomizing Air
Operating Data

Series	4	Concentration	100%
Run No.	10	Amount	1 liter
Date	4-27-42	Wt. Product	28 gms
Material	Na_2SO_4	Room Humidity	55%

Time (min)	Temperatures (°F)						Pressures (lbs. per sq. in.)	
	Inlet Air		Outlet Air		Atomiz. Air	Feed	Air at Nozzle	Steam
	D. B.	W. B.	D. B.	W. B.				
2	296	118	124	110	248	95	23	70
3	289	114	120	119				
3 1/2			Shut	Down				

TABLE 27b

Spray Drying with Atomizing Air Pressure at 23 lbs. per sq. in.
Product Analysis

Transmittancy Constant	1.075
Stokes Law Constant	15,000

Particle Size Determination				
Time (min)	Volts	Illumination (Candlepower)	Size *	Concentration (%)
0	82	6.3	----	100.0
1	80	6.2	11.5	95.7
2	79	5.9	11.0	94.0
3	76	5.2	8.5	89.2
4	74	4.8	7.4	83.8
5	73	4.6	6.6	81.7
6	70	4.0	6.0	75.2
7	64	2.8	5.6	59.2
8	60	2.1	5.2	46.2
9	56	1.5	4.9	32.2
10	54	1.3	4.7	23.7
11	53	1.2	4.5	19.4
12	52	1.1	4.3	14.0
17	51	1.0	3.6	7.5
31	50	0.8	2.6	0.0

Moisture Determination			Bulk Density		
Wt.Sample	Wt.Dry Sample	Moisture	Wt. Sample	Volume	Bulk Density
2.0102 gms	1.9968 gms	0.67 %	10.0 gms	4.1 cc	2.4 gms / cc

* Size = Maximum particle diameter in microns.

TABLE 28a

Spray Drying with 26 lbs. per sq. in. Atomizing Air
Operating Data

Series	4	Concentration	100%
Run No.	11	Amount	2 1/2 liters
Date	4-27-42	Wt. Product	40 gms
Material	Na_2SO_4	Room Humidity	55%

Time (min)	Temperatures (°F)						Pressures (lbs. per sq. in.)	
	Inlet Air		Outlet Air		Atomiz. Air	Feed	Air at Nozzle	Steam
	D. B.	W. B.	D. B.	W. B.				
2	232	110	124	110	246	83	26	70
4	230	111	114	107	246	83	26	70
5	230	112	110	105	246	83	26	70
6			Shut	Down				

REMARKS: Dust in air. Chamber clean but cyclone separator damp inside.

TABLE 28b

Spray Drying with Atomizing Air Pressure at 25 lbs. per sq. in.
Product Analysis

Transmittancy Constant	1.190
Stokes Law Constant	18,000

Particle Size Determination				
Time (min)	Volts	Illumination (Candlepower)	Size *	Concentration (%)
0	78	5.6	———	100.0
1	78	5.6	14.5	100.0
2	76	5.2	11.0	95.8
3	74	4.8	8.5	91.2
4	73	4.6	7.4	88.8
5	72	4.4	6.6	86.5
6	70	4.0	6.0	82.0
7	68	3.6	5.6	76.0
8	66	3.2	5.2	70.2
9	65	3.0	4.9	67.8
10	64	2.8	4.7	64.8
11	63	2.6	4.5	60.8
12	61	2.2	4.3	53.8
13	59	1.9	4.1	46.8
15	58	1.8	3.8	43.5
16	57	1.6	3.7	39.8
17	55	1.4	3.6	30.4
20	53	1.2	3.3	21.1
31	51	1.0	2.6	8.2
37	50	0.8	2.4	0.0

Moisture Determination			Bulk Density		
Wt.Sample	Wt.Dry Sample	Moisture	Wt. Sample	Volume	Bulk Density
2.0303 gms	2.0138 gms	0.81 %	10.0 gms	4.1 cc	2.4 gms / cc

* Size = Maximum particle diameter in microns.

TABLE 29a

Spray Drying with 1 inch Hg Feed Pressure
Operating Data

Series	5	Concentration	100%
Run No.	17	Amount	1 liter
Date	4-10-42	Wt. Product	10 gms
Material	Na_2SO_4	Room Humidity	55%

Time (min)	Temperatures (°F)						Pressures (lbs. per sq. in.)	
	Inlet Air		Outlet Air		Atomiz. Air	Feed	Air at Nozzle	Steam
	D. B.	W. B.	D. B.	W. B.				
1	252	108	128	107	254	93	15	67
3	290	109	127	107	254	93	15	67
4 1/2				Shut	Down			

REMARKS: Was very hard to hold pressure constant. Product was damp. Liquid found in chamber exit duct.

TABLE 29b

Spray Drying with the Feed Pressure at 1 in. Hg
Product Analysis

Transmittancy Constant 1.036

Stokes Law Constant 18,000

Particle Size Determination				
Time (min)	Volts	Illumination (Candlepower)	Size *	Concentration (%)
0	84	7.2	——	100.0
1	84	7.2	14.5	100.0
2	83	7.0	11.0	98.5
3	82	6.8	8.5	96.8
4	82	6.8	7.4	96.5
5	81	6.5	6.6	94.5
6	79	5.9	6.0	90.6
7	78	5.6	5.6	88.6
8	76	5.2	5.2	85.0
9	74	4.8	4.9	80.0
10	73	4.6	4.7	78.8
11	71	4.2	4.5	74.7
12	68	3.6	4.3	67.3
13	65	3.0	4.1	60.2
14	63	2.6	3.9	53.9
15	62	2.4	3.8	51.8
17	60	2.1	3.6	44.6
20	56	1.5	3.3	31.1
22	54	1.3	3.1	23.8
25	53	1.2	3.0	18.7
30	51	1.0	2.7	7.3
37	50	0.8	2.4	0.0

Moisture Determination			Bulk Density		
Wt. Sample	Wt. Dry Sample	Moisture	Wt. Sample	Volume	Bulk Density
1.9131 gms	1.8996 gms	0.70%	4.0 gms	1.9 cc	2.1 gms / cc

* Size = Maximum particle diameter in microns.

TABLE 30

Preliminary Laboratory Determinations

Anhydrous Salt per liter Stock Solution				
Series	Volume of Sample	Wt. Anhydrous Salt	Average Wt.	Anhydrous Salt per liter
3	25 ml	4.2559	4.2517	175.3 gms
3	25 ml	4.2735		
4	25 ml	3.8775	3.8777	155.1 gms
4	25 ml	3.8779		

TABLE 31

Properties of Kerosene

Viscosity of kerosene at 60° F			Density		
Time in Seconds		Viscosity			
Water	Kerosene	Poise	Volume	Weight	Grams per cc
97	193	16.05	50	39.3520	0.79

TABLE 32

Pitot Tube Traverses

Depth of Insertion (inches)	Rectangular Inlet Duct * (6 in. x 15.5 in.) Horizontal Position (inches) 1 1/2	3	4 1/2	Ten Point Traverse of 10 in. duct ** Bleed-off	Chamber Outlet
1.5	0.42	0.42	0.42	0.56	0.52
3.0	0.42	0.42	0.43	0.56	0.54
4.5	0.42	0.42	0.42	0.56	0.53
6.0	0.42	0.43	0.42	0.56	0.49
7.5	0.43	0.42	0.42	0.55	0.47
9.0	0.43	0.43	0.42	0.55	0.47
10.5	0.43	0.42	0.43	0.55	0.47
12.0	0.43	0.43	0.45	0.55	0.49
13.5	0.43	0.42	0.43	0.55	0.53
15.0	0.42	0.42	0.43	0.55	0.57

* 0 point = 0.40 in.

* * 0 point 0.42 in. taken at 1.6, 2.7, 3.5, 4.2, 4.7 in. from the center.

TABLE 33

Steam Rate

Time (min.)	Weight of Condensate (lbs.)	Steam rate (lbs.per hr.)
20	25.6	76.7

Microscopic Examination. Examination of samples of product run under standard conditions indicated that the particles size range was from 3 to 33 microns. The particles were magnified 450 times, the limit of the microscope used, and even then it was difficult to observe their structure. They appeared to consist of small spheres made up of aggregates.

When the temperature of the chamber air was varied, the particle size increased. One explanation of this phenomena is that internal inert gas caused them to expand, forming hollow spheres. Samples of product from runs 4-12 and 4-1 were observed and indicated only that the particle size increased with temperature. The mean diameter was approximately 12 microns for 4-12 and 20 microns for 4-1 run.

Sample Calculations. The candlepower transmitted through a clear kerosene solution was observed for different voltages and Turbidity Meter Curve 1 was plotted.

According to Wagner's method for testing cement:[46]

$$T = \log \frac{I_0}{I}$$

where:

T = turbidity

I_0 = the light transmitted by the clear suspending medium

I = the light transmitted by the suspension

The turbidity meter was operated by varying the voltage to transmit 0.8 candlepower at all times so that $I = 0.8$ for all tests. I_0 could then be determined from Turbidity Meter Curve 1 from the varied voltage reading. A second curve was then plotted from calculated points which represented the log of the transmission intensities for voltages from 50 to 100. This curve is shown in figure 2 .

Now the turbidity is proportional to the concentration of the suspended material so

$$C = k\ (\log I_0 - \log I_d) = k\ T$$

where:

C = concentration of material in percent

k = transmittancy constant depending on the reflecting power, transparency and geometric form of the particles

When one gram of material was mixed well with 50 cc of kerosene, the solution was considered 100 per cent turbid and the transmittancy constant was determined from the zero reading of the turbidity to make this value equal 100 per cent.

For an example, consider the product analysis data when sodium sulphate was spray dried at 94° F (Table 5L). At zero time, the voltage required to transmit 0.8 candlepower was 83. The value of $\log \frac{I_y}{0.8}$ will be seen to be equal to 0.95 from whence the transmittancy constant will be equal to 1.05 (1.05 x 0.95 = 1.00). This constant was then used to multiply all the other values of $\log \frac{I_y}{0.8}$ throughout the run to convert them from turbidity to concentration.

Wagner also expressed Stokes Law in the following form:

$$T = \frac{18\ h\ u\ 10^8}{(p_1 - p_2)g}\ \frac{1}{d^2}$$

where:

T = time in seconds

h = depth of suspension to light level = 8.5 cm

u = viscosity of dispersing medium = 16.05 poise

p_1 = absolute particle density = 2.7 gms per cc

p_2 = medium density = 0.79 gms per cc

g = 980 cm per sec per sec

d = particle diameter in microns

$$\frac{18 \times 8.5 \times 16.05 \times 10^8}{(2.7-0.79)\ 980} = 13,000$$

or $$T = (13,000)\ \frac{1}{d^2}$$

Turbidity Meter Curve 3 was drawn on log-log paper for this equation since it is in exponential form. "T" was expressed in minutes instead of seconds as in the above equations. This curve indicates the maximum sized particle that can be present in the field at a given time.

The specific surface factor was calculated from the concentration and maximum particle diameter over the settling period by using the following equation.

$$\text{Specific Surface Factor} = \frac{6}{s}\left(\frac{w_1}{d_1} + \frac{w_2}{d_2} + \cdots \frac{w_n}{d_n}\right)$$

where:

s = specific gravity

w = fraction of a gram in the increment

d_i = arithmetric mean diameter in the increment (mm)

subscripts 1,2,...n = increments of the total settling period taken at concentration differences of about 10 per cent

For example, considering the same set of data (p.107) the specific surface factor would be:

$$= \frac{6}{2.8}\left(\frac{10}{11.5} + \frac{7.8}{7.5} + \frac{6.4}{6.5} + \frac{12.6}{5.6} + \frac{10.5}{5.05} + \frac{10.5}{4.8} + \frac{10.6}{4.45} + \frac{10.5}{4.0} + \frac{10.6}{3.55} + \frac{10.5}{2.85}\right) = 2.22 \times 10^4 \ (21.36)$$

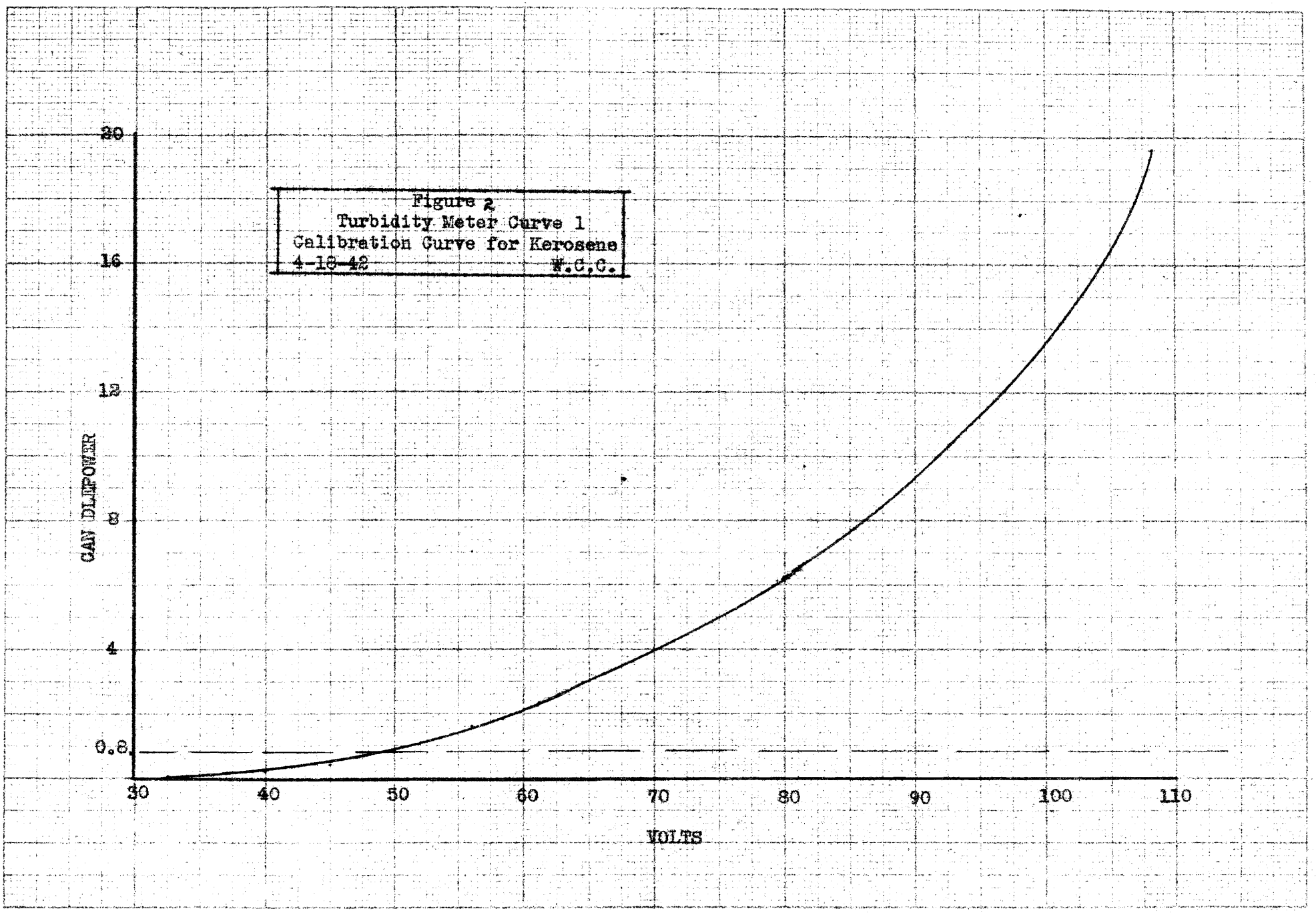
Figure 2
Turbidity Meter Curve 1
Calibration Curve for Kerosene
4-18-42
W.C.C.
20
16
12
8
4
0.8
CAN DIMPOWER
30
40
50
60
70
80
90
100
110
VOLTS

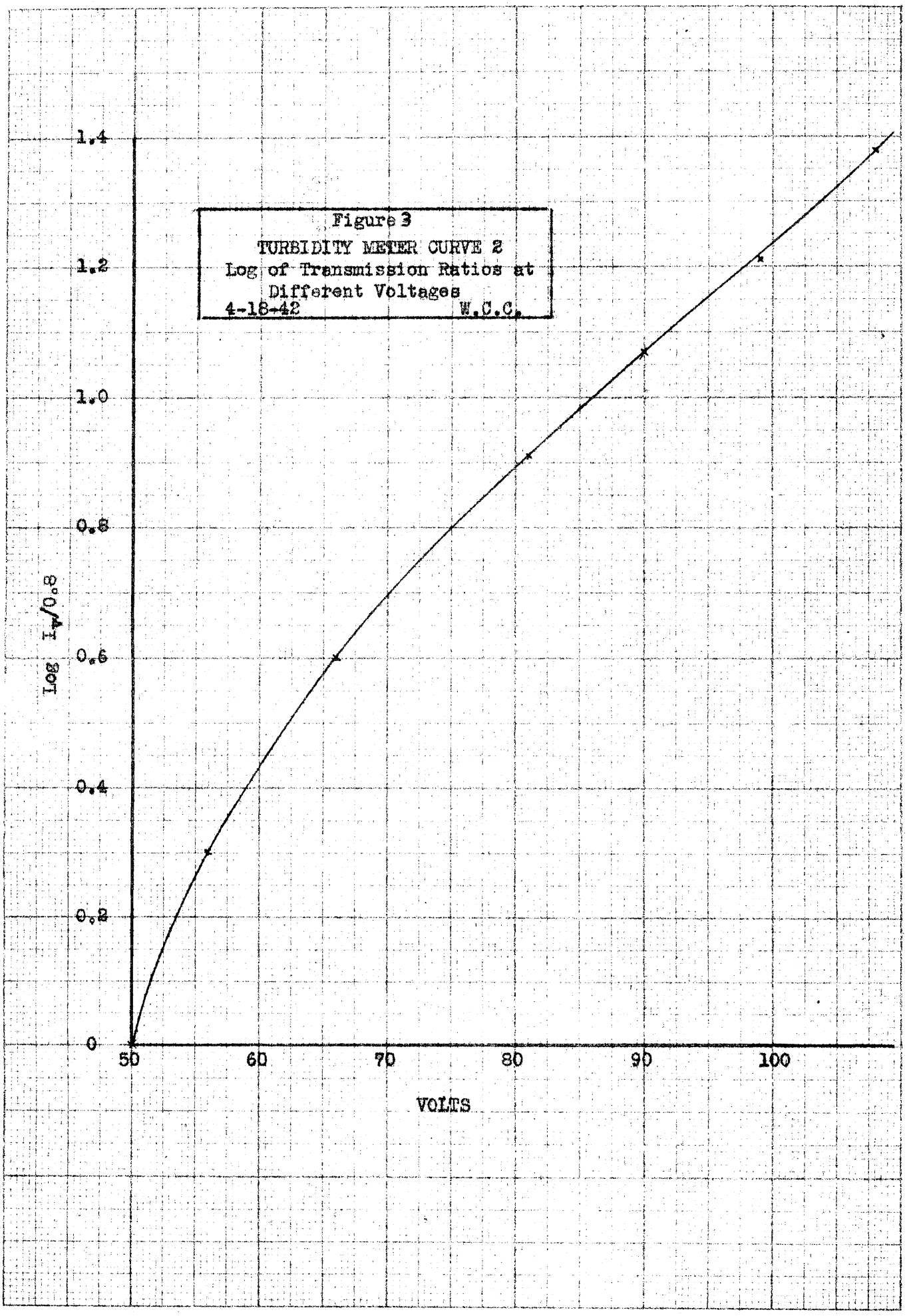
Figure 3
TURBIDITY METER CURVE 2
Log of Transmission Ratios at
Different Voltages
4-18-42
W.C.C.
1.4
1.2
1.0
0.8
0.6
0.4
0.2
0
Log I4/0.8
50
60
70
80
90
100
VOLTS

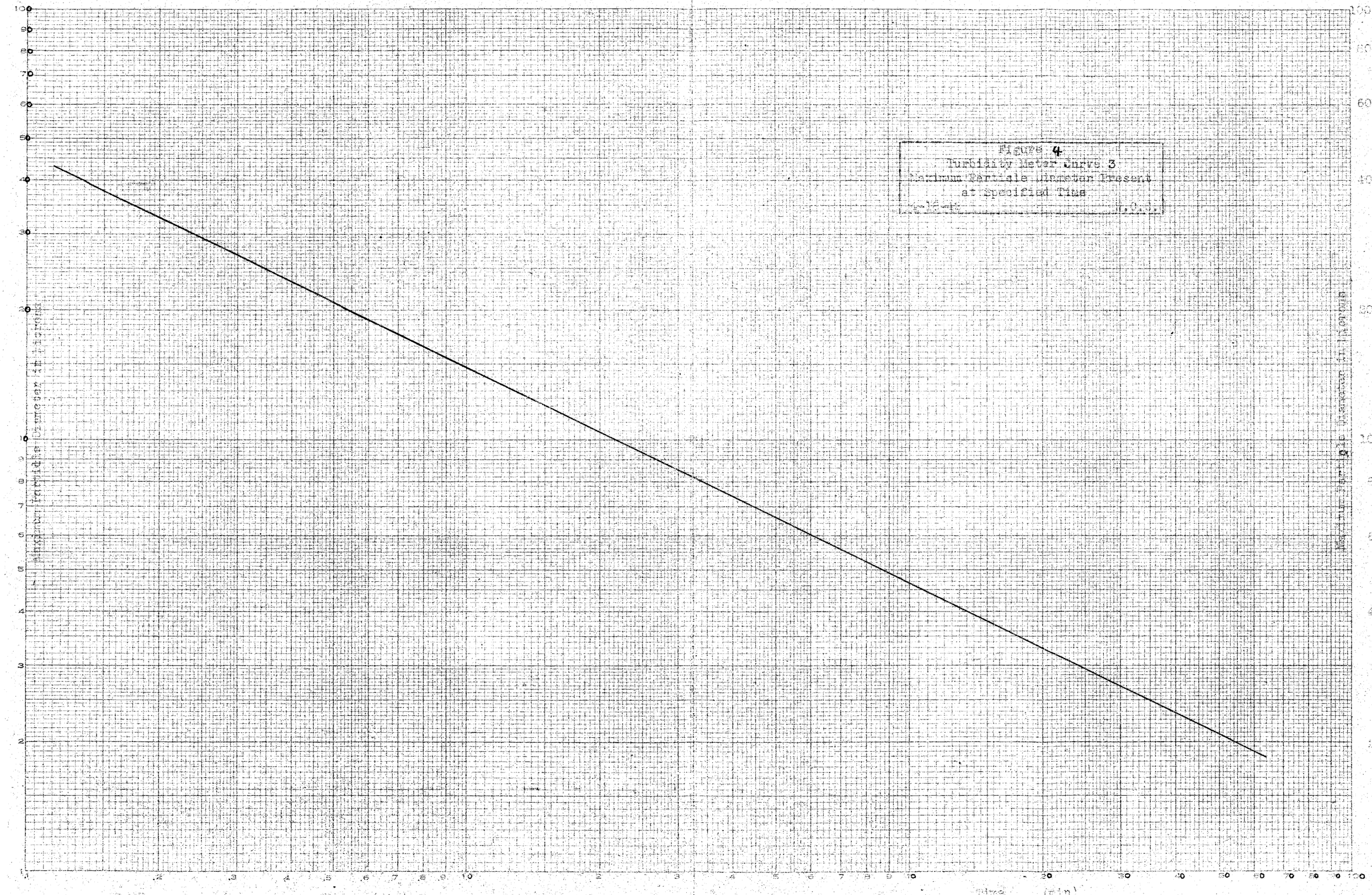

Figure 4
Turbidity Meter Curve 3
Maximum Particle Diameter Present
at Specified Time

H. Results

The results are summarized in Table 34. Curves of the product characteristics indicated in this table were plotted and follow Table 34.

Table 34 has been divided into five sections, each section consisting of one set of variables for one operating condition. The sets will be seen to comprise of: 1) varying the temperature of the atomizing air; 2) varying the feed temperature; 3) varying the chamber temperature; 4) varying the feed concentration; and 5) varying the atomizing air pressure. The variation of specific surface factor, bulk density and moisture content of the product was plotted for each of the mentioned sets of data in the section of curves.

TABLE 34

Operating Conditions and Product Characteristics of Spray Dried Sodium Sulphate

	Inlet Air		Outlet Air		Atomiz. Air		Feed		Specific	Bulk	Moisture	Product	Feed
Run	Humidity %	Temp. °F	Humidity %	Temp. °F	Temp. °F	Pressure lbs/in.²	Temp. °F	Pressure in.Hg	Surface Factor	Density gms/cc	Content %	Recovered %	Conc. gms/L
3-1	0.0	228	27	133	95	15	90	0	20.44	2.5	0.62	20.6	175.3
3-2	0.0	233	30	133	170	15	78	0	19.40	2.4	0.63	21.7	175.3
3-3	0.0	235	24	139	200	15	92	0	20.43	2.5	0.59	22.3	175.3
3-4	0.0	233	46	122	250	15	94	0	21.36	2.2	0.53	22.3	175.3
4-1	0.0	235	44	123	254	15	75	0	19.56	2.2	0.68	27.8	155.1
3-4	0.0	236	44	123	254	15	75	0	19.56	2.2	0.68	27.8	155.1
3-5	0.0	237	38	136	252	15	130	0	22.59	2.4	0.59	12.6	175.3
4-2	0.0	236	61	116	254	15	145	0	20.71	2.2	0.67	31.0	155.1
3-6	0.0	235	22	142	252	15	150	0	18.71	2.4	0.59	10.9	175.3
4-3	0.0	236	28	156	253	15	162	0	20.73	2.2	0.74	39.4	155.1
3-7	0.0	230	22	142	250	15	180	0	21.53	2.2	0.48	23.4	175.3
4-4	0.0	236	42	129	253	15	200	0	20.27	2.2	0.67	45.0	155.1
3-9	8.5	150	76	101	250	15	98	0	25.04	2.5	0.53	5.7	175.3
3-10	3.0	180	42	116	251	15	90	0	22.06	2.3	0.64	23.4	175.3
4-12	1.4	200	61	114	251	15	85	0	22.43	2.3	0.58	25.2	155.1
3-4	0.0	233	46	122	250	15	94	0	21.36	2.2	0.53	22.3	175.3
4-1	0.0	236	44	123	254	15	75	0	19.56	2.2	0.68	27.8	155.1
4-5	0.0	232	38	118	252	15	80	0	23.16	2.3	1.16	9.3	38.8
3-11	0.0	230	35	130	251	15	86	0	24.04	2.3	0.84	20.0	43.8
4-6	0.0	231	58	115	252	15	85	0	22.06	2.3	1.14	36.2	62.0
3-12	0.0	234	48	134	252	15	94	0	21.72	2.4	0.69	8.6	87.6
4-7	0.0	234	55	121	252	15	85	0	20.62	2.3	0.76	14.2	93.2
3-13	0.0	230	50	128	250	15	94	0	20.44	2.4	0.50	11.5	131.2
3-4	0.0	233	46	122	250	15	94	0	21.36	2.2	0.53	22.3	175.3
4-1	0.0	236	44	123	254	15	75	0	19.56	2.2	0.68	27.8	155.1
3-14	0.0	232	22	143	255	8	96	0	25.61	2.2	0.58	9.8	175.3
4-8	0.0	237	38	136	255	10	85	0	21.60	2.4	0.77	22.6	155.1
3-15	0.0	221	21	139	255	10	80	0	18.90	2.4	0.53	13.7	175.3
3-4	0.0	233	46	122	250	15	94	0	21.36	2.2	0.53	22.3	175.3
4-1	0.0	236	44	123	254	15	75	0	19.56	2.2	0.68	27.8	155.1
4-9	0.0	233	56	121	251	17	85	0	20.96	2.4	0.71	38.1	155.1
3-16	0.0	231	54	124	248	20	85	0	18.60	2.4	0.47	18.3	175.3
4-10	0.0	228	65	122	248	23	85	0	18.68	2.4	0.67	16.7	155.1
4-11	0.0	230	73	116	246	25	83	0	24.02	2.4	0.81	25.8	155.1

All operating conditions are based on average data for the run

1. First number of run numbers as listed indicates the series.
2. Moisture per cent is based on weight of sample before drying.
3. Feed concentration represents the grams per liter of anhydrous sodium sulphate.

TABLE 35

Material Balance

(based on 14.5 liters stock solution used in Series 4)

In:	
Water:	
Drying air	77.6 pounds
Secondary air	1.2 pounds
Feed	43.7 pounds
Anhydrous Salt	5.0 pounds
Air	3,240.0 pounds
Unaccounted Material	17.9 pounds
Total	3,385.4 pounds
Out:	
Water in drying air	144.0 pounds
Salt	1.4 pounds
Air	3,240.0 pounds
Total	3,385.4 pounds

Heat Balance

(based on 14.5 liters stock solution used in Series 4 and 78° F datum)

Heat In:	
Chamber air	28,600 BTU
Atomizing air	4,800 BTU
Unaccounted Heat	8,220 BTU
Total	41,620 BTU
Heat Out:	
Latent heat	8,420 BTU
Bag filter	33,200 BTU
Total	41,620 BTU

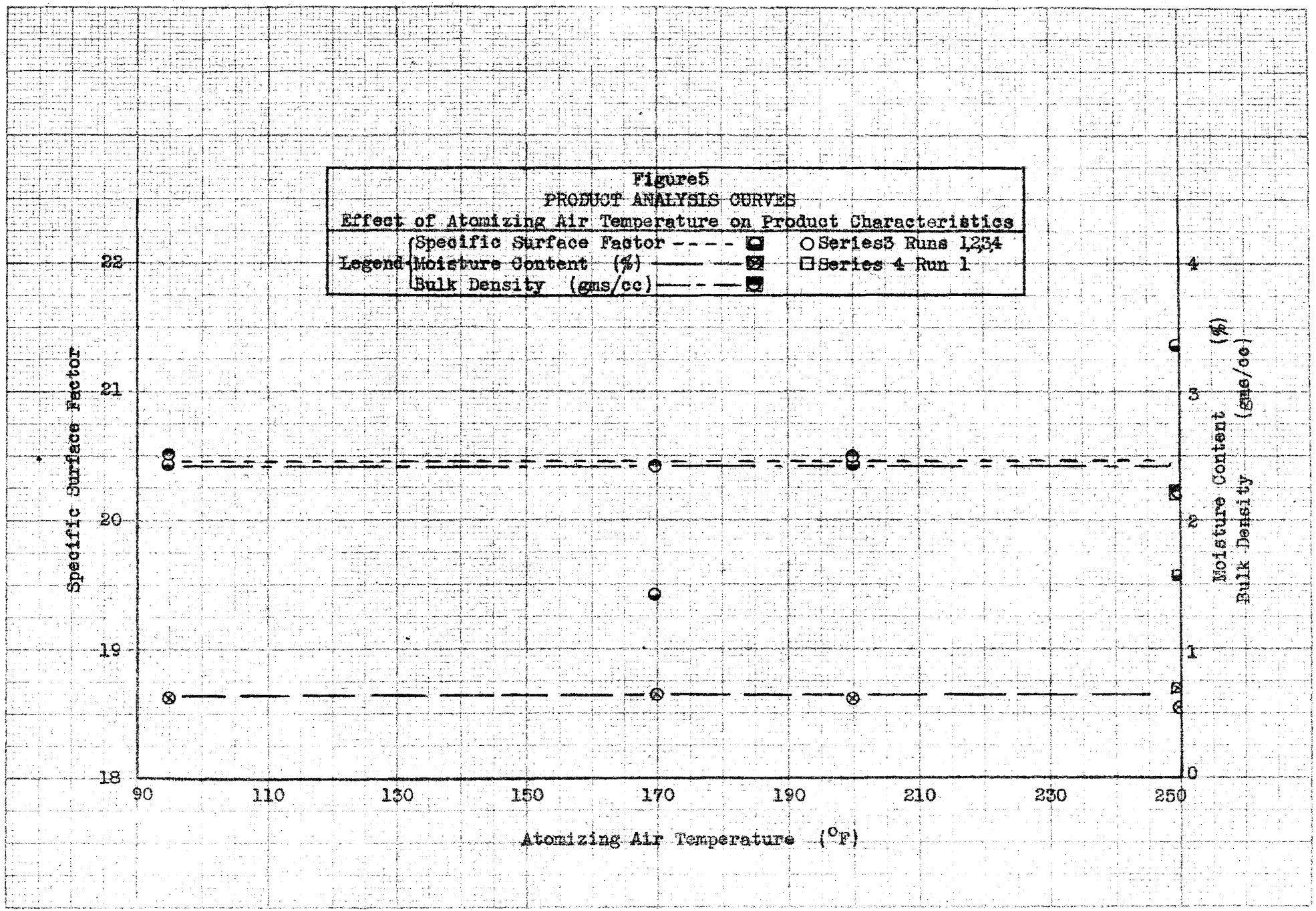

Figure5
PRODUCT ANALYSIS CURVES
Effect of Atomizing Air Temperature on Product Characteristics

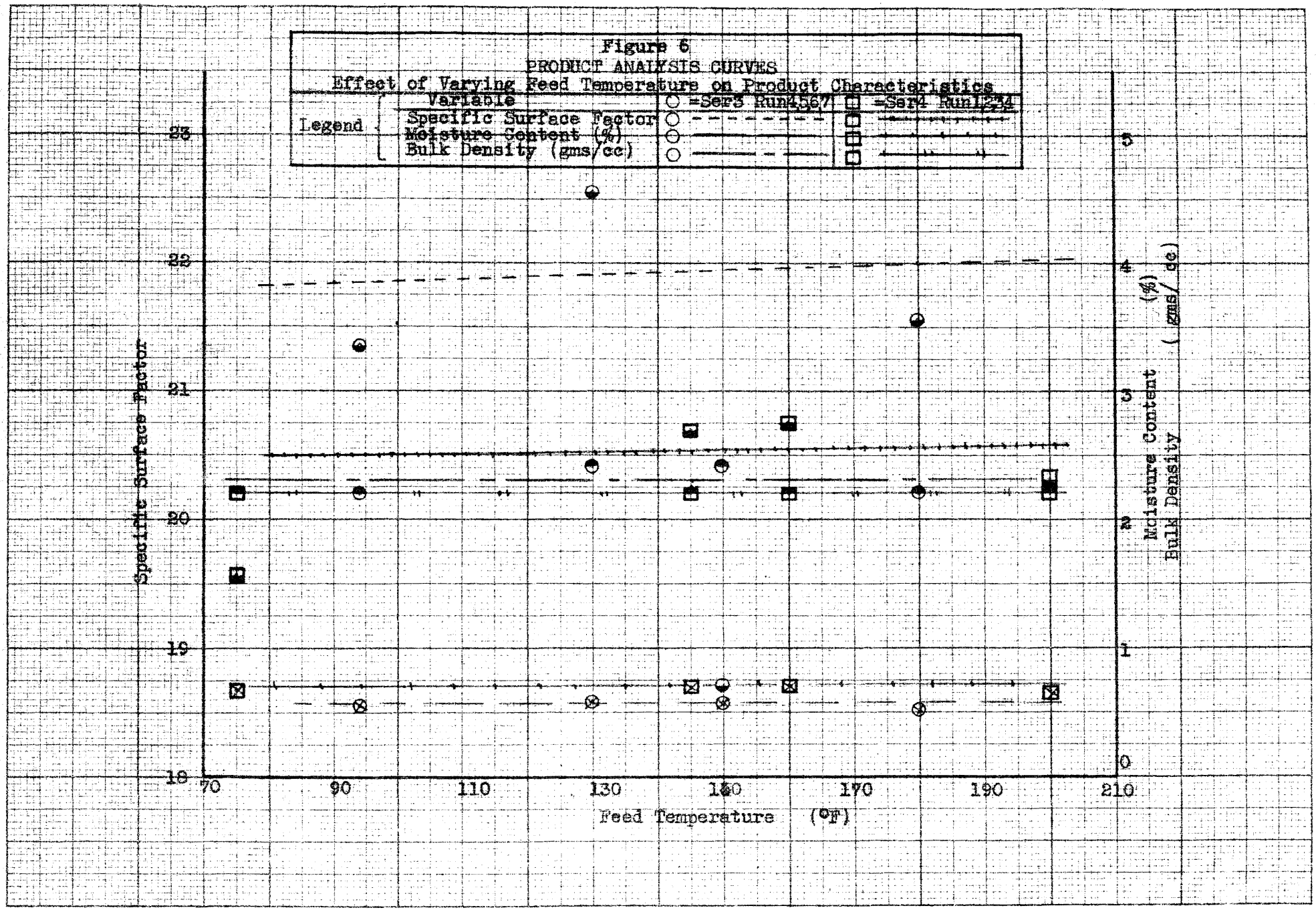

Figure 6
PRODUCT ANALYSIS CURVES
Effect of Varying Feed Temperature on Product Characteristics

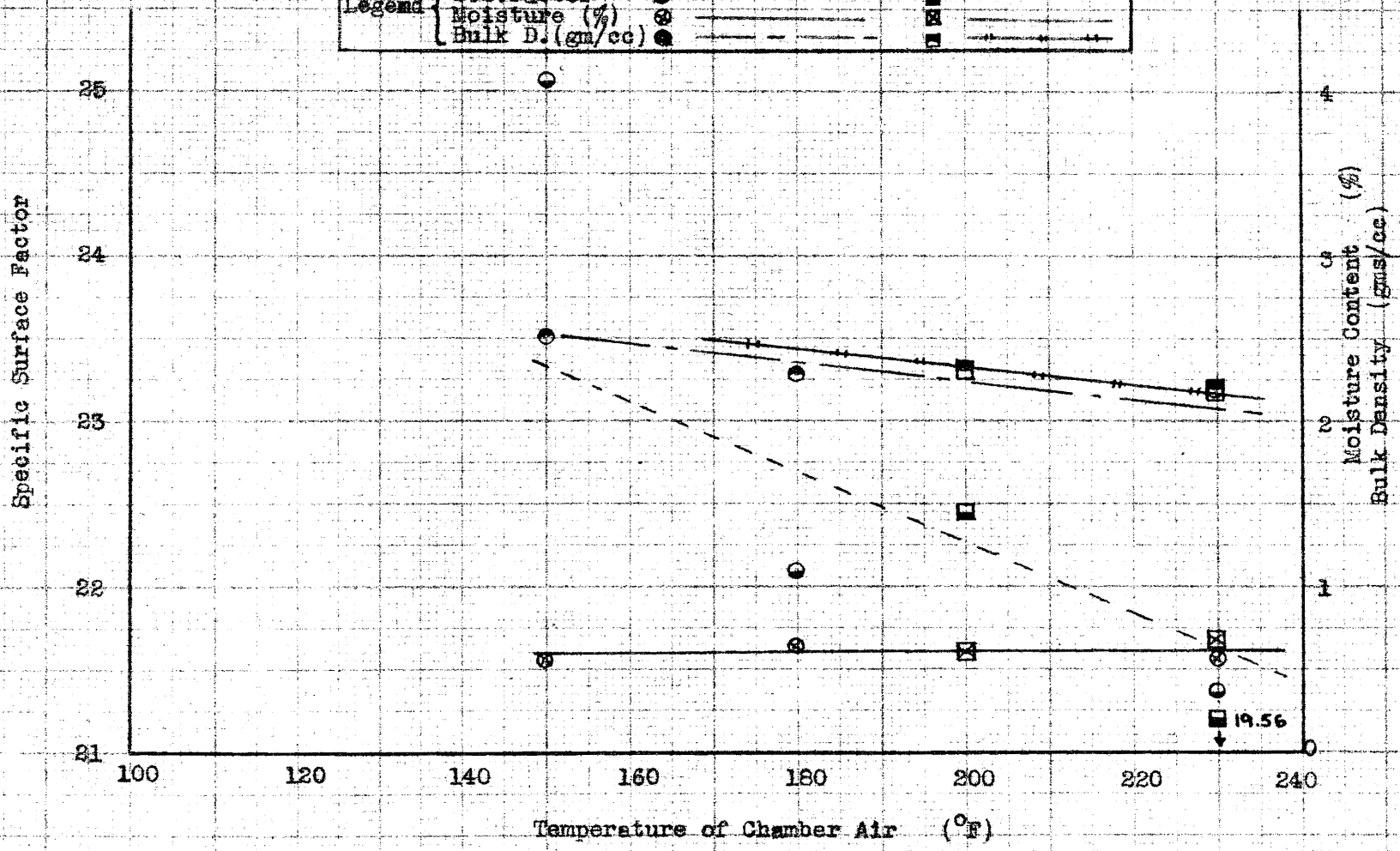

Figure 7

PRODUCT ANALYSIS CURVES

Effect of Chamber Temperature on Product Characteristics

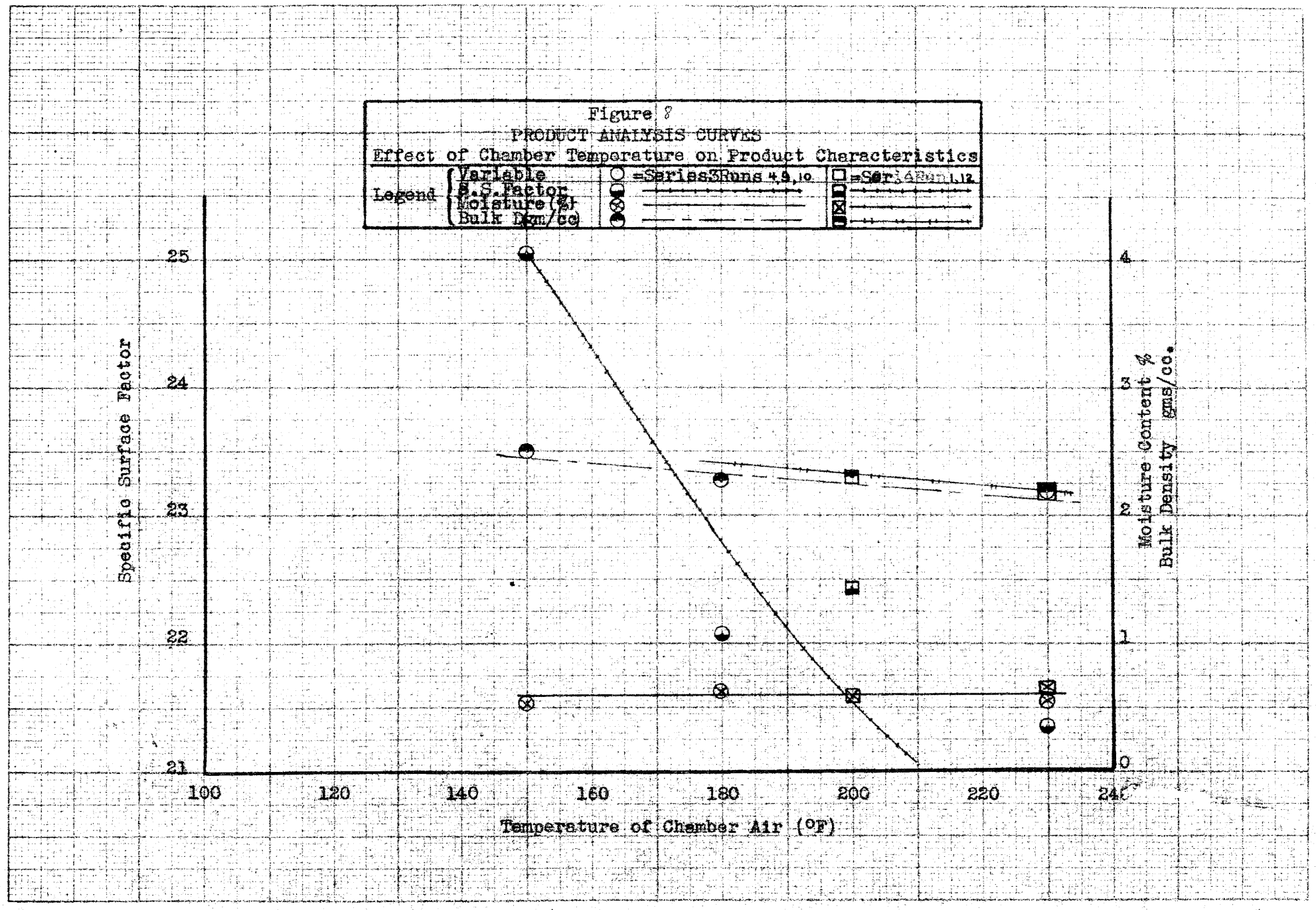

Figure 8
PRODUCT ANALYSIS CURVES
Effect of Chamber Temperature on Product Characteristics

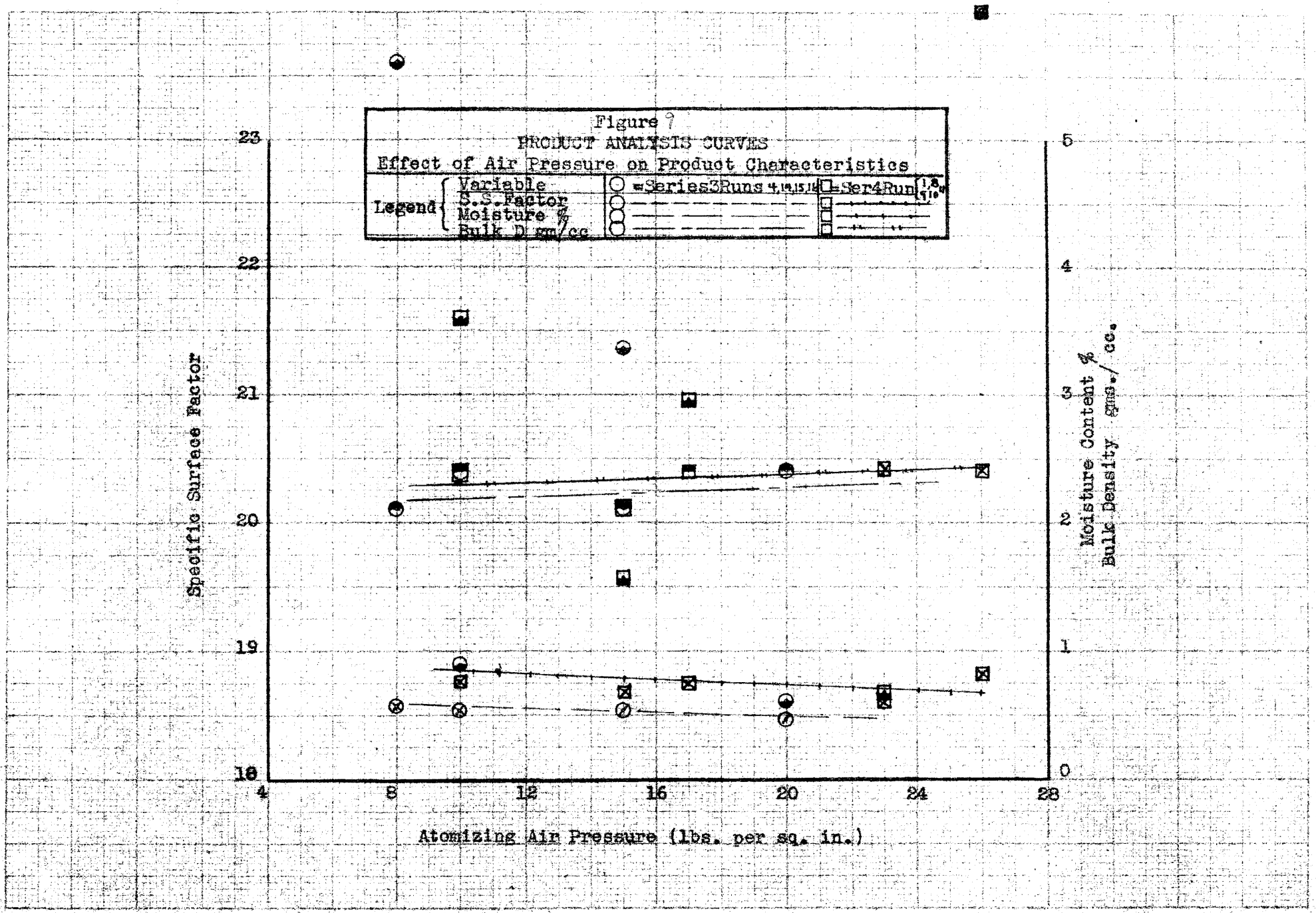

Figure 9
PRODUCT ANALYSIS CURVES
Effect of Air Pressure on Product Characteristics

IV. DISCUSSION

A. Discussion and Interpretation of Results

Effect of Feed Concentration. Figure 8 shows the effect of varying the feed concentration on the product characteristics. This curve clearly shows that increasing the concentration of the feed decreases the specific surface factor, that is, increases the particle size. This would be expected since each particle has a greater amount of salt at higher feed concentrations. A decrease in bulk density also substantiates this conclusion. The moisture content would likewise be expected to decrease since the initial moisture present in the particles before drying is less with concentrated solutions.

The curves for the series three runs will be seen to be lower in moisture content, and higher for the other two variables than the series four curves. The moisture is lower because the initial solution was more concentrated. The specific surface factor and bulk density were higher for series three because the chamber humidity was lower during this run, than during the series four runs. A lower humidity would give a higher drying rate, which would consequently produce finer particles, since more moisture would be removed during the same drying period.

Effect of Varying Feed Temperature. (Figure 6 .) The particle size varied directly as the temperature of the feed, while the bulk density and moisture content remained practically unchanged. Increasing the temperature of the feed reduced the surface tension of the particles at the atomizer, permitting finer atomization. Once again the series three and four curves varied the same as indicated in the preceeding paragraph, and the same explanation would apply.

Effect of Atomizing Air Temperature. Figure 5 was based solely on series three runs, although points for series four are shown for comparison at 250° F. The effect of the atomizing air temperature will seem to be negligible for all the variables within the range tested.

Effect of Air Pressure. Figure 9 indicates that the air pressure could not be used satisfactorily to control the particle size of the product. The results are erratic for this series of tests and no tendency was indicated by the specific surface factors. However, the moisture decreased and the bulk density increased as the pressure was increased, indicating that probably the particle size was reduced as would be expected.

Effect of Chamber Temperature. The particle size (indicated by the specific surface factor in Figure 7) increased with an increase in chamber temperature. In this particular case, the specific surface factor curve was drawn as an average between data taken from series three and series four runs. While it is realized that the preceeding procedure is not exact, it represents the trend which is substantiated by the bulk density data. An explanation of this phenomena was found in Fogler and Kleinschmidt's recent article on Spray Drying.[19] They stated that if case hardening occurred on the surface of the particles, or if a small amount of air or other permanent gas existed in the particle, a small amount of internal expansion would occur in drying. Increasing the temperature of the drying medium would increase this tendency. A microscopic examination of the particles indicated that they increased in size, but no other change in their characteristics was apparent. Lamont also observed that increasing the temperature of the chamber air increased the size of the dried particles.[38]

Specific Surface Factor. The specific surface factor is a very sensitive measure of particle size. This fact will be realized when it is considered that varying the average particle size from four to five microns would change the specific surface factor from twenty-five to twenty. Figure 5, page 115 illustrates this sensitivity admirably. The plot of the specific surface factor shows a definite slope whereas the slope of the bulk density curve is negligible.

Material Balance. Scrutiny of the material balance indicates that complete drying took place and that the low yield of product was certainly not due to partly dried material sticking in the chamber. Difficulty was experienced in getting a satisfactory pitot tube traverse. It was impossible to get twenty pipe diameters downstream from a curve in any of the ducts. Although an average of several readings were taken, the calculated flow rates might quite possibly be considerably in error.

B. Recommendations

While the value of the data was apparently unaffected by the material efficiency of the drier, more efficient operation would be highly desirable from a practical standpoint. Observation of the chamber interior indicates that its present construction is decidedly detrimental to efficient operation. Steel hoops are used to support the walls, being spaced about every foot up the chamber wall. A large amount of dust collected between the hoops and the wall, as well as on top of them. It is probably here that the greatest loss of product occurred in the system, since the external duct work was clean and no product was lost to the atmosphere when the system operated under a partial vacuum.

The importance in keeping the system beyond the chamber hot, especially when high exit humidities exist, might well be stressed here. Cooling of the hot exit air below its dew point must be prevented to eliminate condensation in the system. If the system were to be used with high exit humidities, it would be necessary to lag the ducts and cyclone separator to prevent this trouble.

Another suggestion would be to increase the area of the chamber air heater. Without recirculation, it is only possible to attain a temperature of 190° F with a steam pressure of 80 pounds per square inch. The temperature of this steam is about 320° F and a higher temperature should be available. Increasing the available temperature should increase the capacity of the drier and broaden the range over which this variable could be studied.

The feed rate was controlled by regulating the pressure on the liquid nozzle. Attempts were made to measure this rate with a differential

manometer, but were unsuccessful because of the low rate and varying pressure differential in the feed line. A rotameter should be installed in this line to get an absolute measure of the rate of feed.

A valuable study could be made on this drier to determine the time required for drying particles. The trajectory equation proposed by Shepherd and Lapple might be applied with Johnston's equation for the drying coefficient to determine this rate.

The effect of room humidity was appreciable as evidenced in the plots of data for series three and series four. While this variable is uncontrollable at present, it might be controlled by inserting a steam jet in the air make up duct.[20]

In calculating the material balance, it was found that a surprisingly small volume of the air passing through the blower actually passed through the drying chamber. Of the 1420 cubic feet per minute leaving the fan, only 616 cubic feet went to the chamber, the balance being exhausted through the bag filter. Since it is imperative to operate the chamber under a partial vacuum, and the above flow arrangement permitted a maximum flow to the chamber to realize these conditions, it will be evident that a higher vacuum is necessary to induce a greater flow of drying air to the chamber. Therefore, it would be desirable to install a damper in the make up duct as a secondary control of the vacuum in the chamber. This damper could then be set to produce a maximum vacuum, being limited only by the humidity of the recirculated air.

C. Limitations

While the control of pressure to control the feed rate was the best method available, it left much to be desired as evidenced by the different time rates in the tables of data. Uncontrollable variations in this rate doubtlessly contributed to some of the variations in the results. Lack of control made it impossible to vary the feed rate and study its effect on the product characteristics.

The pressure of the steam available made it impossible to study the effect of varying the chamber temperature except within a narrow range (150-230° F), and made recirculation of the drying medium necessary to even attain this range.

The humidity of the make up air to the system could not be controlled, and its effect was shown in the difference between the runs of series three and series four.

Using a pitot tube traverse to measure the volume of air circulating in the system left much to be desired as a quantitative measuring device. This method is not accurate for measuring the turbulent flow which existed at all points in the system due to the lack of straight duct work.

Lack of control of the make up air made it necessary to use a small flow of drying air through the chamber in order to operate under a partial vacuum. This materially reduced the capacity of the unit and probably reduced the amount of product recovered. A large flow of air in the chamber would increase the velocity of the drying medium and be a contributing factor to reducing the deposition of the product within the chamber.

V. CONCLUSIONS

The following conclusions may be made from the foregoing study within the limits of the research:

1. Increasing the feed concentration of a glaubers salt solution from 25 to 100 per cent saturated reduced the specific surface factor of the product from 24.04 to 20.00, reduced the bulk density from 2.5 to 2.2 grams per cc, and also reduced the moisture content from 1.16 to 0. 53 per cent.

2. Increasing the temperature from 75 to 200° F of a glaubers salt solution only increased the specific surface factor from 20.5 to 22.0 for one run and from 21.8 to 22.0 for a second run. The moisture content and bulk density of the product did not vary appreciably.

3. Increasing the temperature of the atomizing air from 95 to 250° F had practically no effect on the specific surface factor, bulk density or moisture content.

4. Increasing the atomizing air pressure from 8 to 26 pounds per sq. in. reduced the moisture content from 0.58 to 0.47 per cent and increased the bulk density of the product from 2.3 to 2.4 grams per cc.

5. Increasing the chamber temperature from 150 to 236° F decreased the bulk density from 2.5 to 2.3 grams per cc but did not affect the moisture content of the product. Variation in the specific surface factor of the product indicated that the particle size increased with an increase in chamber temperature.

VI. SUMMARY

The process of spray drying consists of dispersing a liquid to be dried into a hot desiccating medium. This operation is carried out in a chamber where the process is completed, and from which the dried product is removed. Due to the tremendous surface area of the dispersed particles and intimate contact of the particles with the drying medium, the drying time is reduced to a minimum. These facts along with the fact that the particle is not heated above the wet bulb temperature of the drying medium, make the process particularly adaptable to drying heat sensitive materials.

Although, the theory for spray drying is similar to that for other drying processes, it is complicated by the aerodynamics of small particles suspended in a turbulent medium. Neither quantitative data nor mathematical relationships are available in the literature which would enable spray drying equipment to be designed on the basis of calculated drying rates. A study of the numerous variables encountered in drying materials by this process should be very helpful for future design work.

The purpose of this investigation was to determine how variable factors such as condition of feed, atomizing variables, and chamber conditions affected the moisture content, bulk density, and particle size of a spray dried material. These variables were studied in a unit constructed at the Virginia Polytechnic Institute according to plans based on available information, and cut and try experimental work.

Sodium sulphate was dried in this unit with the concentration, temperature and pressure of the feed; temperature and pressure of the atomizing air; and temperature of the drying air varied from an arbitrary

set of operating conditions. The product from these runs was analyzed for its moisture content, bulk density, and particle size. The results of these analysis indicated that the concentration of the feed was the most significant variable tested. A variation of 25 to 100 per cent saturation at room temperature reduced the specific surface from 24.04 to 20.00, reduced the bulk density from 2.5 to 2.2 grams per cc and also reduced the moisture content from 1.16 to 0.53 per cent. Increasing the temperature of the atomizing air from 75 to 200° F and temperature of the atomizing air from 95 to 200° F was found to have almost no effect on the variables tested. Varying the atomizing air pressure from 8 to 26 pounds per sq. in. reduced the moisture content from 0.53 to 0.47 per cent and increased the bulk density of the product from 2.2 to 2.4 grams per cc without any definite trend in specific surface. The bulk density was decreased from 2. 5 to 2.3 grams per cc when the temperature of the chamber air was increased from 150 to 236° F. Variation in the specific surface factor indicated that the particle size increased and the moisture content remained constant for this run.

VII. BIBLIOGRAPHY

1. Alford, E. C. Spray Drying Insecticides and Allied Chemicals. Chem. & Met. 41, 654, (1934)

2. Alexander, Jerome. "Colloid Chemistry." p. 657. The Chemical Catalog Co., New York. 1926. 1st ed.

3. Alexander, Jerome. "Colloid Chemistry." p. 164-168. The Chemical Catalog Co., New York. 1931. 1st ed.

4. Andrews, A. I. "Ceramic Tests and Calculations." p. 120. John Wiley and Sons, Inc., New York. 1928

5. Anon. High Capacity Spray Dehydrator. Chem. & Met. 38, 669, (1931)

6. Anon. Unit Spray Drier. Chem. & Met. 43, 610, (1936)

7. Anon. Drying by Spraying. Chemical Construction Co. Chem. & Met. 32, 117, (1926)

8. Badger, W. L. and McCabe, W. L. "Elements of Chemical Engineering." p. 297. McGraw-Hill Book Co., New York. 1936.

9. Badger, W. L. and McCabe, W. L. "Elements of Chemical Engineering." p. 308. McGraw-Hill Book Co., New York. 1936.

10. Beeton, F. H. Drying Liquids, such as Milk, into Powders. Pat. J. Soc. Chem. Ind. 38, 694, (1919)

11. Bowen, W. S. Spray Drying. Ind. Eng. Chem. 30, 1001, (1938)

12. Carnell, W. C. Spray Drier Operation. Unpublished Technical Report. Rohm and Haas Chemical Co., Philadelphia, Pennsylvania. 1940.

13. Carnell, W. C. Reconditioning and Study of the Operating Characteristics of a Spray Drier. Unpublished Thesis. Library, Virginia Polytechnic Institute. Blacksburg, Virginia. 1941.

14. Daily, J. G. Bowen Research Corporation - Correspondence during the summer of 1941.

15. Deleeuw, H. Spray Drying Latex in Sumatra. Chem. & Met. 37, 100, (1930)

16. Dodge, Russell A. and Thompson, Milton A. "Fluid Mechanics." p. 190. McGraw-Hill Book Co., New York. 1937. 1st ed.

17. Fleming, R. S. The Spray Process of Drying. J. Ind. Eng. Chem. 13, 447-449, (1921)

18. Fleming, R. S. The Spray Process. Chem. & Met. 24, 828, (1921)

19. Fogler, R. S., and Kleinschmidt, R. V. Spray Drying. Ind. Eng. Chem. 30, 1572, (1938)

20. Johnstone, H. Fraser. Heat Transfer to Clouds of Falling Particles. Univ. of Ill. Eng. Exp. Sta. Bull. 43, (1941)

21. Lapple, C. E. and Shepherd, C. B. Calculation of Particle Trajectories. Ind. Eng. Chem. 32, 605, (1940)

22. Lampitt, L. H. The Development of the Dried Milk Industry, with Special Reference to Spray Drying. J. Soc. Chem. Ind. 47, 1344, (1928)

23. Langmuir, Irving. Evaporation of Small Spheres. Chem. & Met. 20, 135, (1919)

24. Lough, C. A. A New Drying System for Liquids. Chem. & Met. 19, 48, (1918)

25. McAdams, W. H. "Heat Transmission." p. 173. McGraw-Hill Book Co., New York. 1933.

26. McCormack, H. Drying Chestnut Extract by the Carbon Process. Trans. Amer. Inst. Chem. Eng. 10, 411, (1917)

27. Meyer, P. Heat Transfer to Small Particles by Natural Convection. Trans. Inst. Chem. Eng. (British) 15, 127, (1937)

28. Moore, H. K. Chemical Engineering Aspects of Renovating a Sulphide Mill. Chem. & Met. 17, 119, (1917)

29. Moore, H. K. Some General Aspects of Evaporation and Drying. Trans. Inst. Chem. Eng. (British) 10, 376, (1917)

30. Noel, W. A. A Peculiar Dust Explosion. Chem. & Met. 31, 255, (1924)

31. Partridge, E. P. Improved System for Spray Drying and Recovery of Product. Ind. Eng. Chem. 22, 601, (1930)

32. Patent Literature (Chronologically) Originals not seen.
    a. 51,253, C. A. LaMont, 1865; earliest reference to spray drying, relates to egg powder.
    b. 656,711, R. Steuf, 1901; atomized material introduced into hottest zone of drying air (patent acquired by Merrell-Soule Co.)
    c. 860,929, I. S. Merrell, I. S. Merrell, and W. G. Gere, 1907; preconcentration before spraying shown.
    d. 890,078 and 940,398, W. Luring, 1908-1919; use of steam or other heated gaseous medium to assist atomization of soap, which is first superheated.

e. 962,721, W. S. Osborne, 1910; concurrent spraying with hot air; dried product recovered in cyclone collector, exhaust from which is scrubbed with weak spray liquor, thus recovering dust and entrained solids.

f. 1,099,740, W. B. McLaughlin, 1914; current of relatively cold air introduced at predetermined point in the drying stream to solidify product.

g. 1,183,393, J. S. Merrell and G. E. Merrell, 1916; high pressure spray nozzle, adapted for pressures of 3000 lb. per sq. in. and over.

h. 1,215,309 and 1,350,348, 1917 and 1920; H. W. G. Stutzke; use of superheated steam directly as drying medium, recirculation of drying medium by closed system.

i. 1,732,464, G. H. Wurster; 1929; impingement atomizer for soap solutions.

j. 1,734,260, D. R. Lamont, 1929; control characteristics of spray dried soap by regulating atomizer.

k. 1,914,955, D. D. Peebles, 1933; use of two tangential currents of drying air of different characteristics, one current outside the other, each moving in opposite directions. (Process used by Western Precipitation Co.)

l. 2,081,909, W. S. Bowen, 1937; air introduced through long vertical slots into drying chamber in such a manner and angle that dried product will not accumulate on walls.

m. 2,182,788, W. H. Burkhart, 1938; spray drying in two stages to reduce plasticity and prevent adhesion.

n. 696,874,* Fritz Kording, 1940; volatile ammonia salt as an addition agent in drying suspensions to control bulk densities.* (German)

33. Perry, J. H. "Chemical Engineers' Handbook." p. 1598. McGraw-Hill Book Co., New York. 1941. 2nd ed.

34. Philip, J. G. Fog and Mist From the Physics - Chemical Standpoint. Trans. Inst. Chem. Eng. (British) 16, 200, (1938)

35. Philip, J. G. The Development of Spray Drying. Trans. Inst. Chem. Eng. (British) 15, 107, (1935)

36. Rosvell, J. A. Concentration of Fruit Juices and Fruit Drying. J. S. C. I., Chem. Ind. 15, 618-621, (1937)

37. Rosvell, J. A. Film and Spray Drying. Trans. Inst. Chem. Eng. (British) 6, 115, (1928)

38. Reddie, W. A. An Investigation of Some of the Factors Affecting Spray Drying. Unpublished Thesis. Library, Virginia Polytechnic Institute, Blacksburg, Virginia. 1940.

39. Rongsted, W. G. Drying Heat Sensitive Solutions. Ind. Eng. Chem. 33, 1544-1546, (1941)

40. Schmidt, E. A. Cottrell Processes of Electrical Precipitation. Trans. Amer. Inst. Chem. Eng. 8, 60, (1915)

41. Shepherd, C. B., and Lapple, C. E. Flow Patterns and Pressure Drop in Cyclone Dust Collectors. Ind. Eng. Chem. 32, 1246, (1940)

42. Shepherd, C. B., and Lapple, C. E. Flow Pattern and Pressure Drop in Cyclone Dust Collectors. Ind. Eng. Chem. 31, 972-984, (1939)

43. Sherwood, T. K. Development of Drying. Chem. & Met. 42, 314, (1935)

44. Stewart, R. D. Many New Fields Invaded by Spray Drying. Chem. & Met. 35, 470, (1928)

45. Thomas, Preston. "Light." p. 287. Macmillan and Co. New York. 1898. 2nd ed.

46. Wagner, L. A. A Rapid Method for the Determination of the Specific Surface of Portland Cement. A. S. T. M. Proceedings. 33, 583, (1933)

47. Waite, R. Laboratory Spray Drying Machine. J. Soc. Chem. Ind., Chem. Ind. 18, 659-661, (1940)

48. Warster, O. H. Soap Technology Meets Changed Markets. Chem. & Met. 38, 218, (1931)

VIII ACKNOWLEDGMENTS

The author wishes to express his gratitude to Dr. A. H. Cooper for his willing and able guidance in the course of this research.

Dr. F. C. Vilbrandt also gave many valuable suggestions throughout the period of study. F. S. Dear kindly aided the author by letting him use the Zoologie's Department Microscope. Material assistance was given during construction period by H. C. Gentry, whose undergraduate thesis was on this phase of the subject.