HARBORAGE LIMITATION AND HABITAT ISOLATION FOR GERMAN COCKROACH CONTROL

by

Bobby R. Farmer Jr.

Thesis submitted to the Graduate Faculty

of Viriginia Polytechnic Institute and State University

in partial fulfillment for the degree of

Master of Science

in

Entomology

APPROVED:

Dr. W.H Robinson, Chairman	Dr. R.D. Fell
Dr. J.L. Eaton	Dr. S.L. Poe

June, 1982

Blacksburg, Virginia

ACKNOWLEDGMENTS

I would very much like to thank Dr. W.H Robinson for his guidance throughout the course of the study and for his encourgement when it was most needed. My committee members also deserve my sincere thanks, Dr. Fell for help in correcting this work and Dr. Eaton whose comments and suggestions were much appreciated.

Without the technical computer assistance of John Deighan, this beautiful computer output would never have been achieved and for this I thank him wholeheartedly.

My friends, without whom I would have never survived this research, deserve many thanks. John Dukes and Mike Tolley are two of my best friends whose help in caulking and in consoling me when times were rough will never be forgotten. Also many thanks go to Kevin Cannon whose advice was invaluable throughout my stay at Virginia Tech. I am deeply indepted to them all.

Technical assistance and materials were provided by Patricia Zungoli -Bellinger, Mr. Tom Tuttle of Johnson Wax Products (who provided the pyrethrin areosol), Roanoke Redevelopment and Housing Authority (who provided me with the opportunity to conduct the research and provided the caulking compound), Dr. E. C. Turner (without whom I would not have had transportation more

than once), and Janet Goldblatt (whose excellent illustrations grace this paper).

I would like to acknowledge the residents of public housing whose privacy was invaded on a daily basis by myself and others simply for the sake of science.

Many many thanks go to Roseanna my companion and helper whose constant source of encouragement was always there when I needed it most. I would also like to thank her for her two figures which took so much time and effort.

And last but never least, I would like to express my deepest appreciation to my parents whose support both financially and morally kept me going.

THANKS MOM!

TABLE OF CONTENTS

LIST OF FIGURES

Figure Page

LIST OF TABLES

INTRODUCTION

The German cockroach, *Blattella germanica* (L.) is the most important household pest in the United States (Mampe 1972) and worldwide (Cochran et al. 1975, Mueller 1978). This species lives in close association with man in areas where a warm, moist environment is most likely to be found. They are known carriers of disease-causing organisms (Roth and Willis 1957) and are recognized as a visual, and sometimes economic pest (Mallis 1960).

German cockroaches are secretive, house and apartment infesting insects, whose nocturnal habits often make determination of their presence and abundance difficult. They hide in cracks and crevices when at rest (approximately 75% of the time), preferring cracks about 3/16 of an inch in width (Berthold and Wilson 1967).

The habit of resting in cracks and crevices, coupled with poor sanitation within the habitat, make chemical application for German cockroach control a difficult process. Chemicals usually do not reach the areas in which the cockroaches hide and control is achieved only when the insects move from their harborages and contact the insecticide residue.

Populations of German cockroaches have developed resistance to commonly used insecticides (Grayson 1960, 1961). Many of these chemicals are also repellent to cockroaches (Ebeling 1966, 1967, 1968). Resistance and repellency make chemical application by itself a poor control technique.

An Integrated Pest Management (IPM) approach should be used in order to achieve control of German cockroach populations. Resident education, management training, sanitation within the habitat, and applicator training must be integrated with proper insecticide selection and application. These strategies are important, yet they may be rendered ineffective if cockroaches avoid insecticide treatment by moving between apartments or hide in untreatable harborages. Eliminating the movement and dispersal of cockroaches between apartments, as well as limiting the harborages available to them, may improve the effectiveness of cockroach control techniques.

The research presented here evaluates harborage limitation and habitat isolation as two control stategies that would be useful if incorporated into a cockroach IPM program. The objectives of the research are 1) to demonstrate the value to a cockroach IPM program of limiting the movement and dispersal of adults and nymphs of German cockroaches; and 2) to demonstrate the value to a cockroach IPM program of reducing harborage accessibility to adults and nymphs of German cockroaches.

LITERATURE REVIEW

The biology of *Blattella germanica* (L.) has been studied extensively in the laboratory and in the field. Early laboratory studies were concerned with biology and life history (Rau 1924, Ross 1929, Woodruff 1939). The first comprehensive report on the biology of *B. germanica* was published by Gould and Deay (1940). Woodruff (1938) and Rau (1943) published information on reproduction and behavior. Roth and Willis (1952,1954) added to this information with detailed laboratory studies using various species of cockroaches. Gunn (1935) and Gould (1941) studied the temperature and humidity preferences of the German cockroach. The information available on *B. germanica* and other cockroaches, has increased to the point that there have been two texts published about these species (Guthrie and Tindall 1968, Cornwell 1968). Cochran et al. (1975) has reviewed the status of cockroaches as a worldwide pest species.

The incidence of German cockroaches as a pest species and its ability to produce large population sizes is well documented. Mallis (1964) estimated the presence of 280,000 cockroaches in 177 apartments, 99.7% of which were German cockroaches. Grothaus et al. (1981) and Kruse (1948), made theoretical population expansion estimates based on actual life cycle data. These estimates range from 400,000 per year from one gravid female (calculated from data of Gould and Deay 1940), to 10 million females in one year (based

on laboratory data), (Grothaus et al. 1981). Haines and Palmer (1955) reported that German cockroaches occurred in houses 86.6% more than any other cockroach species. Wright (1965) reported that 96-100% of apartment buildings surveyed in North Carolina cities had cockroach infestions, 90% of which consisted of German cockroaches. Moore (1971) surveyed six public housing projects and found 60% of them to be infested with German cockroaches. Wright and McDaniel (1969, 1973) and Ogata et al. (1975) reported the German cockroach to be the most prevalent species found in houses and apartments versus other types of buildings.

The German cockroach has the potential to be a vector of medically important diseases (Roth and Willis 1957). Janssen and Wedberg (1952), report that *B. germanica*, when fed *Salmonella sp.*, can still pass infective feces up to 7 days after feeding. Olsen and Reuger (1950), Rueger and Olsen (1969) and Ash and Greenberg (1980) reported that cockroaches can be vectors of various food poisoning organisms. Simple mechanical or fecal transmission are the two most probable routes of pathogen transfer (Barson 1979). Frishman and Alcamo (1977) demonstrated the presence of many food poisoning organisms on specimens of *B. germanica* obtained from the field. Fisher and Syverton (1951) demonstrated in the laboratory that the cockroach could be an experimental vector of coxsackie virus. Syverton et al. (1952) demonstrated the ability of *B. germanica* to act as a vector of polio myelitis virus. Kang (1976),

Bernton and Brown (1964,1967,1970a,b), and Cornwell (1977), reported that *B. germanica* antigens are causitive agents in bronchial asthma.

German cockroach distribution within houses and apartments is an important factor when considering the pest status of this species. Wright and Hillman (1975) reported that *B. germanica* was found in kitchen areas of single family houses more than any other area in the house. Akers and Robinson (1981) reported the highest populations of German cockroaches were located in certain apartments (foci) where food, water and poor sanitation were at a maximum.

Sanitation affects the density and distribution of German cockroaches. Ross and Wright (1977) reported population density and distribution were directly related to sanitation, i.e., availibility of food and water within the habitat. Mueller (1978), Ono and Tsujii (1972), and Kunkel (1966), reported that food and water availability affect the individual development and population equilibrium of German cockroaches. Wright (1979), showed a positive correlation between sanitation and cockroach density, Gupta et al. (1973) and Owens (1980) examined the effects of sanitation on methods to control German cockroaches. Wright (1979) citing Bennett (1979) states that "If there is no correlation (of control with sanitation) in apartments, it may be due to possible cockroach migration between adjoining apartments."

Migration and dispersal of German cockroaches between apartments has been reported. Suto and Kamada (1981) report that Geman cockroaches produce a dispersion inducing substance in their saliva. Klunker (1977) demonstrated that cockroaches can slip through cracks as small as 0.5 mm (nymphs) and 2.1 mm (adults). Actual movement of adult German cockroaches between apartments was demonstrated by Owens (1980), who found movement as high as 30%, and Akers (1980), who reported much lower movement (1-3%). Zungoli (personal communication) and Runstrom (personal communication) have also shown movement of adult cockroaches between apartments with common plumbing.

Methods for following movement of German cockroaches in the field and population estimation techniques require a dependable method of marking individual cockroaches. Owens (1980) used enamel paint combined with a cobalt siccative to mark German cockroaches on the wings, thorax, and abdomen. Zungoli (personal communication) used liquid paper to mark German cockroach wings.

Walker and Wineriter (1981) and Southwood (1978) reviewed individual insect marking techniques and stated the criteria for a good marking compound. A good marking compound must be durable, adhesive, non-toxic, easy to apply, quick drying, lightweight, available in many colors and invisible except to the researcher. Fluorescent dyes have all of these qualities. These dyes in powder form have been used to mark a variety of insects

(LaBreque et al. 1975, Reeves et al. 1948, Sheppard et al. 1973). Norris (1957) devised a method whereby newly emerged calypterate flies would self mark upon emergence. Moth and Barker (1975) determined that fluorscent powder had no effect on the longevity of *Drosophila spp*. However, Moffit and Albamo (1972) determined fluorscent powder had signifigant effects on fecundity and longevity of codling moths.

Control of German cockroaches has been based on the application of residual chemicals to easily accessible harborages (Riererson et al. 1979, Flynn and Schoof 1971, Chadwick 1976) and to cracks and crevasses where the cockroaches rest (Shore 1974). The relative success or failure of such control programs depends on effective chemical application, cockroach resistance and repellancy. Resistance to chemical insecticides was first observed in German cockroaches in 1953 (Heal et al. 1953). Grayson (1960,1961,1964,1966) and Cochran (1973) have reported that German cockroaches may become resistant to many chemicals applied for their control. Burden (1974) reported an easy method for resistance testing. Ebeling et al. (1966,1967,1968), demonstrated the repellency of insecticides applied for cockroach control. Reierson and Rust (1977) reported that repellency can be a major factor in reducing blatticide effectiveness. They have attempted to counter this effect by adding aggregation pheromone extracts to insecticides (Rust and Reirerson 1976a,b). The advantage of using

the aggregation pheromone in German cockroach control programs was confirmed by Metzger and Trier (1975).

Many current cockroach control programs are based on the concept of Integrated Pest Management (IPM). Waller (1965) set up a cockroach IPM program in public housing in California. Emphasis was placed on sanitation, tenant education, whole building treatment versus single-unit treatment, applicator training, and selective use of more than one type of insecticide. Piper and Frankie (1978) designed a cockroach IPM program which stressed selective insecticide application, trapping, sanitation and use of natural enemies to suppress domiciliary cockroach populations. Wood (1980), working in urban housing in Baltimore, stressed PCO (applicator) training, selective chemical treatment based on sanitation within the habitat, use of many types of chemical insecticides, and resident education. Ebeling (1971, 1978) and Ebeling et al. (1969) stressed the use of insect-proofing during construction and subsequent treatment with sorptive dusts. Slater et al. (1979), working in student housing, stressed the use of built-in controls, tenant education, selective use of three different chemicals, inspections, and record keeping.

Information is available on sanitation as it relates to cockroach control (Gupta et al. 1973, Owens 1980), resident attitudes about cockroach problems (Wood 1980, Wood et al. 1981), homeowner pesticide use and attitudes towards use (Graham 1967, Bush 1968,

Frankie and Levinson 1978), proper chemical application techniques (Karner et al. 1977, Reierson et al. 1979), trapping and control uses of traps (Reirerson and Rust 1977, Piper and Frankie 1978, Ross 1981 a), population estimation techniques of field populations (Bulow and Huggins 1968, Keil 1981), and cockroach genetic mutants as a possible component of a German cockroach control program (Ross and Cochran 1973, 1976, Ross 1977, and Ross et al. 1981).

MATERIALS AND METHODS

All experiments were conducted in apartments administered by the Roanoke Redevelopment and Housing Authority, Roanoke, Virginia, from June 1981 to February 1982. Each building contained either four or six two-story apartments. Sanitation in the apartments used in this research was considered poor. Food scraps, dirty clothes and unclean dishes were present in abundance. Tenants were contacted and permission obtained to conduct the experiments in their apartments. Letters were sent to the tenants describing the purpose and methods of the experiment.

The cockroach population in each apartment was evaluated with traps before the project was started. The traps consisted of one-quart Mason jars with the inner rim coated with a thin layer of petroleum jelly. A paper towel was secured around the exterior with an elastic band. One tablespoon of boiled raisins in a small polyethylene dish was placed in the jar as bait. Raisins were boiled immediately prior to use to obtain maximum attractiveness. A four dram, sponge-wicked vial was placed in the jar to provide water. Three traps were placed in the apartments for 48 h, then removed and the cockroaches in the traps counted. Apartments in which 25 or more cockroaches were trapped, were considered to have large populations and were chosen for the experiments.

HARBORAGE LIMITATION

The harborage limitation study was conducted in the Hunt Manor housing project. All cracks, crevices, harborage access, and actual harborage areas in the two bathrooms and kitchen area were sealed with latex caulk (Southern Products Co.) and polyurethane foam. The caulk was used to seal long, extended cracks and crevices, while the foam was used to seal large open areas which beads of caulk could not fill. Harborages in control apartments were not sealed. Six traps were placed in the apartments for 24 h. Following the caulking and foam treatments, five traps were placed downstairs and one upstairs as follows: downstairs 1) under kitchen sink (KS), 2) lower kitchen cabinet (KC), 3) next to refrigerator (KR), 4) next to washing machine (KWM), 5) next to bathroom toilet (DSB); upstairs 6) next to bathroom toilet (USB).

After the 24 h trapping period, the traps were removed and the cockroaches counted. The number of males, females, females with visible ootheca, and nymphs were recorded. Apartments were then sprayed with 0.5% chlorpyrifos in water using a compressed-air sprayer with the nozzle set at course-fan. The posttrapping procedure was the same as that used for pretrapping. The traps were set out 1 wk, 2 wk, 6 wk, and 20 wk after the apartments were sprayed. Trap counts were tabulated and percentage control determined.

The effectiveness of limiting harborages was examined also by determining harborage access. Harborage access was considered to be any crack or area a cockroach could enter (0.5-2.3 mm in size). All cabinets in the kitchen and bathroom were measured and actual harborage access determined in linear feet. Areas under the sinks, around the top and bottom of the toilet, and around the cabinets were measured and total harborage access determined. Total harborge access for these two rooms in the apartment was calculated and from this number the actual percentage of harborage sealed was determined.

HABITAT ISOLATION

The habitat isolation study was conducted in the housing projects of Landesdowne Park and Lincoln Terrace. Apartments with large cockroach populations (focus apartments) were chosen so that there were two other apartments located on either side of it. All cracks, crevices, plumbing accessways, gaps around pipes, and miscellaneous holes that might allow cockroaches to move between apartments were caulked. Control units were not caulked.

Ten traps were then placed in the focus units. Traps were placed downstairs and upstairs as follows: downstairs 1) under kitchen sink (KS), 2) next to the refrigerator (KR), 3) in the pantry (P), 4) staircase closet (SC), 5) living room (LR); upstairs 6) next to bathroom toilet (B), 7) linen closet beside bathroom

(BLC), 8) linen closet between bedrooms (LC), 9) bedroom closet near bathroom (BBD), 10) bedroom closet furthest from bathroom (BB).

Traps were removed and replaced with fresh traps 24 h later. The traps were then placed in ice to immobilize the cockroaches. The cockroaches were separated into groups (males, females, females with visible ootheca and nymphs) which were then counted and marked.

The method of marking consisted of dusting adults and nymphs with a fluorescent pigment (Aurora pink, Day-Glo Color Corp.). After marking, the cockroaches were returned to the traps and taken back to the apartments and released at points of capture. Laboratory tests with the marking powder revealed no mark loss or transfer and no mortality from treatment with the powder. Marking continued for 7 days with counts of marked and unmarked cockroaches taken each day. Apartments were then treated with a 0.25% synergized pyrethrins aerosol to induce cockroach movement. Prior to the pyrethrin treatment, 10 traps were placed in each adjacent apartment in locations that were identical to those in the middle or caulked apartments. These traps were removed 24 h later. Fresh traps were placed and removed 1 wk later. Traps contents were counted as before and trap counts tabulated. An ultraviolet light was used to separate marked cockroaches from unmarked ones.

DATA ANALYSIS

Data from both experiments were analyzed using a Wilcoxon paired sample T-test ($P<0.1\%$) to check for overall differences between treatments and controls. The habitat isolation experiment was analyzed for differences in amount of movement between treatments and controls. Harborage limitation was analyzed for differences in relative amounts of control between treatment and control apartments.

RESULTS

HARBORAGE LIMITATION

The results for this experiment are summarized on Tables 1-5 and Figures 1-5. Figure 1 presents the mean numbers of German cockroaches trapped versus number of weeks postspray. Zero weeks postspray is the time before insecticide was applied, and the cockroaches trapped during this period are termed prespray counts. This graph shows that over the 20 wk period the means of the treatments and controls followed a similar trend. The prespray trap count mean (0 wks) for the treatments was 80 cockroaches and the control trap count mean was 70 cockroaches. The means were based on the total number of cockroaches trapped, per 6 traps, in each apartment. One week after the insecticide treatment, the mean number of cockroaches for the treatments dropped to 60. The mean number for the controls dropped to 15 cockroaches. This difference between treatments and controls is reflected in the percentage control.

Table 1 presents the percentage control in each treatment and control apartment for the 4 postspray counts. Percentage control in treatment 1 for 1 wk postspray was -30%. This is in contrast to 58% and 82% control in the other two treatment apartments. This negative percentage control is the result of an increase in actual number of cockroaches trapped in the apartment after spraying with the insecticide. The percentage control after 1 wk postspray in the two control apartments was 45% and 82%, respectively.

The graphic representation of the mean numbers of cockroaches trapped is based on data from Table 2. Table 2 presents the total number of cockroaches for the complete experiment. The total cockroach count for 1 wk postspray increased in treatment 1 from 110 cockroaches trapped to 143 after the insecticide application. There was a decrease in the numbers trapped in all of the other apartments (see Table 2).

Tables 3-5 present the number of cockroaches trapped seperated by sex and life stage. Table 3 presents the number of adult males trapped for all apartments. The number of males trapped in apartment 1 dropped from 43 trapped prespray to 39 trapped 1 wk postspray. In apartment 2 the number of cockroaches trapped dropped from 18 to 11 and in apartment 3 the number of cockroaches trapped dropped from 36 to 4. The two control apartments followed similar trends. Control apartment 1 dropped from 6 males to 5 after the treatment and control apartment 2 from 45 to 9.

Table 4 presents the number of females with and without oothecae that were trapped both before and after insecticides were applied. In general relatively low numbers of females were trapped in the apartments. The three treatment apartments had 13, 4, and 7 females without oothecae trapped, respectively before the insecticide application. Only 0, 2, and 4 females with oothecae were trapped before the insecticide application. The control apartments

also had low numbers with 1 and 16 females without oothecae trapped prespray and 1 and 8 females with oothecae trapped prespray. The number of females trapped in treatment apartment 1 increased from 13 prespray to 38 postspray (Table 4). In all other apartments the number of females without oothecae remained constant or decreased. There was a similar trend in numbers of females with oothecae trapped. Treatment 1 increased while the others decreased, except apartment 2, which had a slight increase from 2 to 3 cockroaches.

Table 5 presents the number of cockroach nymphs that were trapped during the course of the experiment. The numbers of nymphs trapped in treatment 1 before insecticide application was 54 which increased to 59, 1 wk postspray. All other apartments had a decrease in the number of cockroach nymphs trapped for the same period.

The mean numbers of cockroaches trapped in treatments and controls were approximately the same 2 wks after insecticide application. A mean number of 17 cockroaches were trapped at this time (Figure 1). Six weeks later the mean numbers increased dramatically, the treatments to 190 cockroaches and the controls to 98 cockroaches. Twenty weeks after insecticide application the means dropped back down to a level similar to that which was found 2 wk postspray. The mean number of cockroaches trapped in the treatments at 20 wks postspray was 38 and the mean number of cockroaches trapped in the controls was 25.

There were no significant differences ($P<0.1\%$) between treatments and controls in percent control over the period from 2 wk to 6 wk postspray. A similar level of significant difference was found for the numbers of males trapped (Table 3), the numbers of females trapped (Table 4), and numbers of nymphs trapped (Table 5). Percentage control in apartment 2 for the 2 to 6 wk postspray period, showed an increase from 2 wk to 6 wk postspray. The percentage control in all the other apartments decreased, with apartment 3 and control 2 decreasing to negative percentage control. This accounts for the rapid rise in mean numbers at 6 wk postspray as shown in Figure 1.

HABITAT ISOLATION

The results of this experiment are summarized on Tables 6-8 and Figures 6-13. Treatments 1-3 were focus apartments (ie. ones with large cockroach populations) in which the holes and accessways between the focus and the adjacent apartments were sealed. Controls 1-5 were focus apartments in which the holes and accessways between the focus and adjacent apartments were not sealed. Treatments and controls both had units on either side of them, and these are termed adjacent apartment units.

The percentage movement of adult German cockroaches is presented in Table 6. Adult cockroaches include males, females, and females with oothecae.

The percentage movement was calculated on the basis of recapture probabilities. The probability of recapture (P/R:Table 6) is the number of marked cockroaches recaptured in the focus apartment in a 1 wk trapping period divided by the total number marked in that apartment. The percentage movement was calculated as the number of marked cockroaches trapped in the adjacent apartments divided by the total number marked and then adjusted by the probability of recapture (R/M or the probability of movement and recapture:Table 6). For comparison a number (P/M) is given for the number of marked cockroaches trapped in the adjacent apartment as a percenttage of the total numbers marked. The percentages calculated using the recaptured number of adults were much higher than the ones calculated using the overall total of cockroaches captured and marked. The recapture percentages ranged from a high of 35.29% in treatment apartment 2 to a low of 2.78% in control apartment 2 (Table 6). There were no significant differences ($P<0.1\%$) noted between the control apartments and the treatment apartments when a Wilcoxon paired sample T-test was used.

The actual numbers of males, females with oothecae, and females without oothecae that moved are presented in Table 7. In general, males moved much more readily than females. All apartments, treatments and controls, had some male movement, while only three apartments (treatments 1 and 2, and control 1) had any

movement of females. A total of 814 males were marked and 22 of the males that were marked moved to adjacent apartments. The numbers of total females (ie. females with oothecae combined with those without oothecae) marked was 760. Fifteen of the females that were marked moved to adjacent apartments. The totals of males and females captured and marked in all apartments differ by only 54 individuals or approximately 3.5% of the total number marked. The numbers of males and females that moved differ by 7 individuals or 19% of the total number of marked individuals that moved to an adjacent apartment.

The movement of females without oothecae versus the movement of females with oothecae differed by one individual; 8 females without oothecae versus 7 females with oothecae. There were 495 females without oothecae marked and 265 females with oothecae marked.

In treatment apartment 1, 825 cockroaches were marked and 9 of these moved from the caulked apartment to the adjacent apartments. Figure 6 depicts the number of cockroaches that moved, dividing them according to the direction of movement. Eight cockroaches (no immatures) moved into the adjacent apartment to which the treatment apartment was connected by common plumbing and 1 cockroach moved in the other direction.

In treatment apartment 2, 133 cockroaches were marked and 14 of the marked cockroaches moved into the adjacent apartments.

Figure 7 depicts the directional movement of the cockroaches. Twelve cockroaches moved from the caulked apartment into the adjacent apartment that had common plumbing. The adjaent apartment that did not have plumbing in common with the caulked apartment had only 2 marked cockroaches move into it.

In treatment apartment 3 a total of 165 cockroaches were marked. However, in this apartment only one marked cockroach moved into an adjacent apartment. The cockroach moved into the adjacent apartment that did not have plumbing in common with the caulked apartment (Figure 8).

In control apartment 1 a total of 223 cockroaches were marked and 8 moved to adjacent apartments. Only two of the cockroaches that moved were nymphs. The adjacent apartment that had plumbing in common with the focus, had 7 marked cockroaches move into it (Figure 9). Only one marked cockroach moved into the other adjacent apartment.

In control apartment 2 a total of 443 cockroaches were marked, and one individual moved to an adjacent apartment. None of the marked cockroaches that moved were nymphs. As figure 10 shows, this cockroach moved between apartments without common plumbing.

In control apartment 3 a total of 67 cockroaches were marked and 3 marked cockroaches moved from this apartment to the adjacent apartments. Figure 11 shows the directional movement of these

three cockroaches; two moved into an apartment that had common plumbing between the two apartments, and the other individual moved to the other adjacent apartment. There were no immatures among the movement group.

In control apartment 4 a total of 154 cockroaches were marked. There were 3 adults that moved to adjacent apartments and no immatures. Figure 12 shows that 2 cockroaches moved into the adjacent apartment without common plumbing while the other cockroach moved into the opposite apartment.

In control 5 a total of 282 cockroaches were marked. There were only 2 adults and one immature cockroach that moved. All three of these moved into the adjacent apartments that had plumbing in common with the focus apartment (Figure 13). The percentage movement between focus and adjacent apartments is tabulated on Table 8. These percentages are based on total numbers marked and total numbers moved. All of the percentage movements calculated were under 1% and there were no significant differences ($P<0.1\%$) between treatments and controls.

DISCUSSION

HARBORAGE LIMITATION

Limiting harborage and harborage access available to German cockroaches in urban apartments was studied. Harborage access is defined as any crack or crevice through which an adult or immature German cockroach could slip or in which a cockroach could hide to avoid insecticide treatments. By limiting the harborage available to German cockroaches it was expected that the mortality and control achieved with an insecticide treatment would be increased. A trapping method using raisin-baited Mason jars was employed to survey cockroach populations and determine the effectiveness of the harborage limitation. Other studies (Ross 1981, Owens 1980, Reirerson and Rust 1977) have shown baited jar traps to be good cockroach survey tools.

No significant differences ($P<0.1\%$) between treatments and controls were observed. The harborage and harborage access limitation did not increase the control achieved with a commercial insecticide spray. These results were attributable to a combination of factors including structural problems and other available harborages.

Treatment apartment one was a major factor in causing data analysis to yield nonsignificant results. Even though it had similar sanitation problems as the other apartments, this apartment had some structural problems that were unique. The structural

problems rendered the areas that needed to be sealed very difficult to treat. This apartment could not be sealed as well as the two other treatment apartments. For example in the cabinets under the kitchen sink the flooring of the cabinet had been exposed to a constant source of water which had caused serious wood decay. A large opening had been created in the flooring and this opening proved difficult to completely seal. This area was not sealed well and therefore cockroaches may have been able to enter areas under the flooring and escape the effects of insecticide treatment.

Harborage and harborage access limition was very difficult to achieve. It required approximately 7-8 man-hours per apartment to adequately seal all available harborages and harborage access. Seven to eight 11oz. tubes of interior caulking compound and one 16oz. can of polyurethane foam were used to accomplish sealing in each apartment.

The harborage access sealed was determined by measuring kitchen cabinet and bathroom areas. Certain areas interior to kitchen cabinets were unaccessible to the tools used for sealing (caulking gun and polyurethane applicator can). These unaccessible areas and other accessible areas are presented on figures 2-5. The broken lines indicate uncaulked areas (---- = interior and .... = exterior areas). The circles and triangles indicate caulked areas both interior and exterior to the cabinets. Using these diagrams along with actual cabinet measurements it was determined that there

are approximately 96 linear feet of harborage access external to the cabinets. Eighty three percent of this area was sealed. There was approximately 143 linear feet of harborage access available internally, and approximately 41% of this area was sealed.

Harborage access is any crack or crevice through which or in which an adult or nymph German cockroach could slip or hide. Klunker (1977) reported that the minimum crack-size for small nymphs (1st instar) was .5mm and the minimum size for males was 2.4 mm., females 1.7 mm., and females with ootheca 2.1 mm. Klunker (1977) also stated that "the cracks preferred for the aggregation of the individual instars are 2 to 3 times larger than the smallest cracks that the cockroaches are still able slip through". Berthold and Wilson (1967) reported that adult German cockroaches preferred to rest in cracks about 3/16" (4.6 mm) in width. These figures were kept in mind when measuring areas in the apartments for harborage access determinations.

Explanation of the results of this experiment are based on the actual percentage of the harborage access sealed. An assumption of the experiment was that sufficient harborage and harborage access could be sealed to achieve some increase in insecticide control. This would be accomplished by forcing cockroaches from their hiding places and thus increasing contact between insecticides and cockroaches. When approximately 41%, or less than one-half, of the internal harborage was not sealed, a difference between treatments

and controls would not be expected. Cockroaches could apparently escape insecticides equally well in treatments or controls. This is reinforced by the fact that in apartment 1, sealing was futher hampered by the decaying wood problem. In this apartment substantial area existed for insects to escape insecticide treatments and thus lead to a decrease in percentage control.

The treatment apartments had low levels of sanitation. This led to an increased availability of harborages in which the cockroaches could hide and avoid insecticide treatments. Areas in the kitchen had washing machines, freezers and other large appliances, within which cockroaches could aggregate. The trap set next to the kitchen washing machine often caught many more cockroaches than the other traps in the apartment.

The variability in the data and small sample size do not lend the data to easy interpretation. Fluctuations in the data set could be due to yearly population fluctuations attributable to micro-climatic conditions that often differ over a period of time within the apartments. These effects are most likely to be expressed in the later stages of the study. The actual data at 6 wk and 20 wk postspray shows a great fluctuation. Apartments were sprayed by the in-house pest control crew during week 7 of the study. This could account for the severe drop in the number of insects trapped 6 wk and 20 wk postspray. However no significant difference ($P<0.1\%$) was noted between treatments and controls even at this time.

Valuable data on the field effectiveness of harborage limitation was gained. The amount of time and effort spent caulking, sealing, and spraying these apartments is not justified in terms of the amount of control achieved with a simple thorough spraying. The control achieved in the unsealed apartments is essentially equivalent to the control achieved in apartments with harborage and harborage access sealed. The cabinets in the kitchen and bathroom areas of these apartments were old and had considerable harborage access. Rather than waste valuable time, caulking and trying to seal harborages, time spent applying a thorough insecticide treatment would prove more economical. Unless some effort is made to increase the sanitation level within apartments any effort made towards decreasing harborage availablity to cockroaches would be negated.

The difficulties of finding and obtaining permission to work in apartments for such a study, make the use of small sample sizes essential. Futher experimentation on the idea of harborage limitation would be better accomplished in a laboratory situation where many factors such as seasonal fluctuations in populations and tenent interference could be avoided.

HABITAT ISOLATION

The effects of caulking and sealing accessways between urban housing apartments on limiting the movement of German cockroaches between these apartments was studied. It was expected that sealing

all accessways between the apartments would limit or stop the movement of cockroaches between the apartments.

No significant results between treatments and controls were observed. The movement rates or percentage movement in the treatments was not statistically different ($P<0.1\%$) from the movement rates in the controls. Sealing the accessways between the apartments did not alter the percentage movement of cockroaches between apartments. Even after considerable care had been taken to seal all of the possible routes of movement between these apartments, some movement still took place.

Caulking all of the accessways between these apartments took approximately 8 man hours or one full day of work. An average of ten, 8 oz. tubes of interior latex caulk were used to seal each treatment apartment.

Movement of cockroaches between apartments was initiated using a pyrethrin aerosol. The concentration used was 0.25% to maximize movement and minimize mortality. Some mortality from the spray was found which was difficult to quantify. Often agitated cockroaches would enter into areas unaccessible to the researcher thus making a determination of the mortality difficult. Laboratory studies of pyrethrin induced mortality were not considered justified because an exact measurement of the amount of pyrethrins applied in the field could not be made. One second bursts of the aerosol were used for an approximate 2000 cubic feet of room or cabinet

space. It was assumed that mortality throughout the treatments and controls was equal.

The movement rates found for the study were calculated using probability of recapture. The highest adult movement rate was 35.3% found in treatment apartment 1 and the lowest movement rate was 2.8% found in control apartment 2.

Adult male cockroaches moved more than the females did. Twenty-two marked males were found to have moved to adjacent apartments. Out of 15 female cockroaches that moved, only 7 were ootheca bearing females and 4 of these moved between apartments in the treatment group.

There is a common idea among pest control operators and apartment dwellers, that cockroach problems are caused by the cockroaches coming from "next door". The research presented here supports the idea that cockroaches can come from "next door". Movement of cockroaches between apartments was found and some of the cockroaches that moved were females with ootheca.

Although movement rates or percentage movement found in these apartments were low, there exists no data base on which comparisons can be made. The low movement rates found could still be sufficiently high to start new infestations of cockroaches in adjacent apartments. One ootheca bearing female can introduce 38-40 nymphs into an adjacent apartment. Kruse (1948) calculated that after one year, 400,000 individuals may result from introduction of one gravid female.

The low movement rates obtained may have resulted from increased mortality of cockroaches because of the pyrethrin application. Other reasons for the low movement rates also exist. Capture rates of marked cockroaches may not have been representative of the actual numbers of cockroaches that moved, although recapture data shows that considerable numbers of marked cockroaches were recaptured in the focus units. Marking of the cockroaches may have altered their behavior towards the traps. Considerable care was taken to mark cockroaches as little as possible to minimize the effects the mark might have on behavior. Laboratory studies also found no mortality due to the marking technique or from the effects of the marking compound. Mark loss or transfer to unmarked individuals did not occur.

The low movement rates found among females are likely a result of female sedentary behavior. Reports in the literature of trapping data (Ross and Wright 1979) have often stated that males forage more widely than do females. This tends to support the fact that higher movement rates were found among males.

Movement rates between apartments that had plumbing in common were higher than rates between apartments without common plumbing. Overall there were 5 apartments where the movement rates were higher between the two apartments with common plumbing and 3 apartments where movement rates into the apartment without common plumbing were higher. This trend is what would be

expected since apartments with common plumbing would be expected to have more routes or avenues available for cockroach movement. In general, movement rates between apartments were higher if there were large numbers of cockroaches trapped in the adjacent apartments. This occurs even if there is no common plumbing. Seven out of eight apartments used in this study follow this trend. Movement of cockroaches between the focus and the adjacent apartment that has high cockroach numbers is expected to be high. There is a greater chance that cockroach movement would occur when there are larger numbers of cockroaches present. Density-dependent movement does not seem to occur in the apartments studied.

There are reports of German cockroach movement in the literature. Akers (1980) using blackbody, genetically marked, lab-reared cockroaches found movement from 1-3%. Zungoli (Personal communication) found 31 cases of movement out of a total of 3581 cockroaches marked or an amount of 0.8%. Owens (1980) found movement up to 30% and Runstrom (Personal communication) also found movement that was high. The amount of movement found by Zungoli and Akers was found in urban housing apartments in Roanoke, Va. The other high movement is from urban housing apatments in Indiana. This shows that there are inherent differences in movement depending on the buildings and apartments studied.

Even when all available accessways are caulked and sealed there is some movement of German cockroaches between apartments. The percentage movement in the treated apartments was not significantly different ($P<0.1\%$) from the movement in the non-treated or control units. The amount of time, effort, and money spent on sealing these holes and accessways does not provide any discernable benefit in terms of limiting cockroach movement.

CONCLUSIONS

The results presented here provide some insight into two previously untested methods that might help in the control of German cockroaches. Harborage limitation and habitat isolation were studied and the following conclusions drawn:

1) The amount of time, effort, and money spent to seal structural harborage within apartments and/or accessways between apartments is not justified in terms of the results generated. Niether harborage limitation or habitat isolation increased the amount of control over that which had been achieved in the control group;

2) Harborage limitation by itself is not a viable cockroach control tool. It is very difficult to eliminate structural harborage in such a way that insecticide control is increased. Complicating factors include poor sanitation, other available harborage and difficulty in sealing;

3) Insecticide induced movement between urban housing apartments was low;

4) Cockroaches do move between apartments and this is facilitated by common plumbing.

Figure 1. Mean numbers of German cockroaches trapped in treatment and control apartments versus number of weeks postapplication of 0.5% chlorpyrifos.

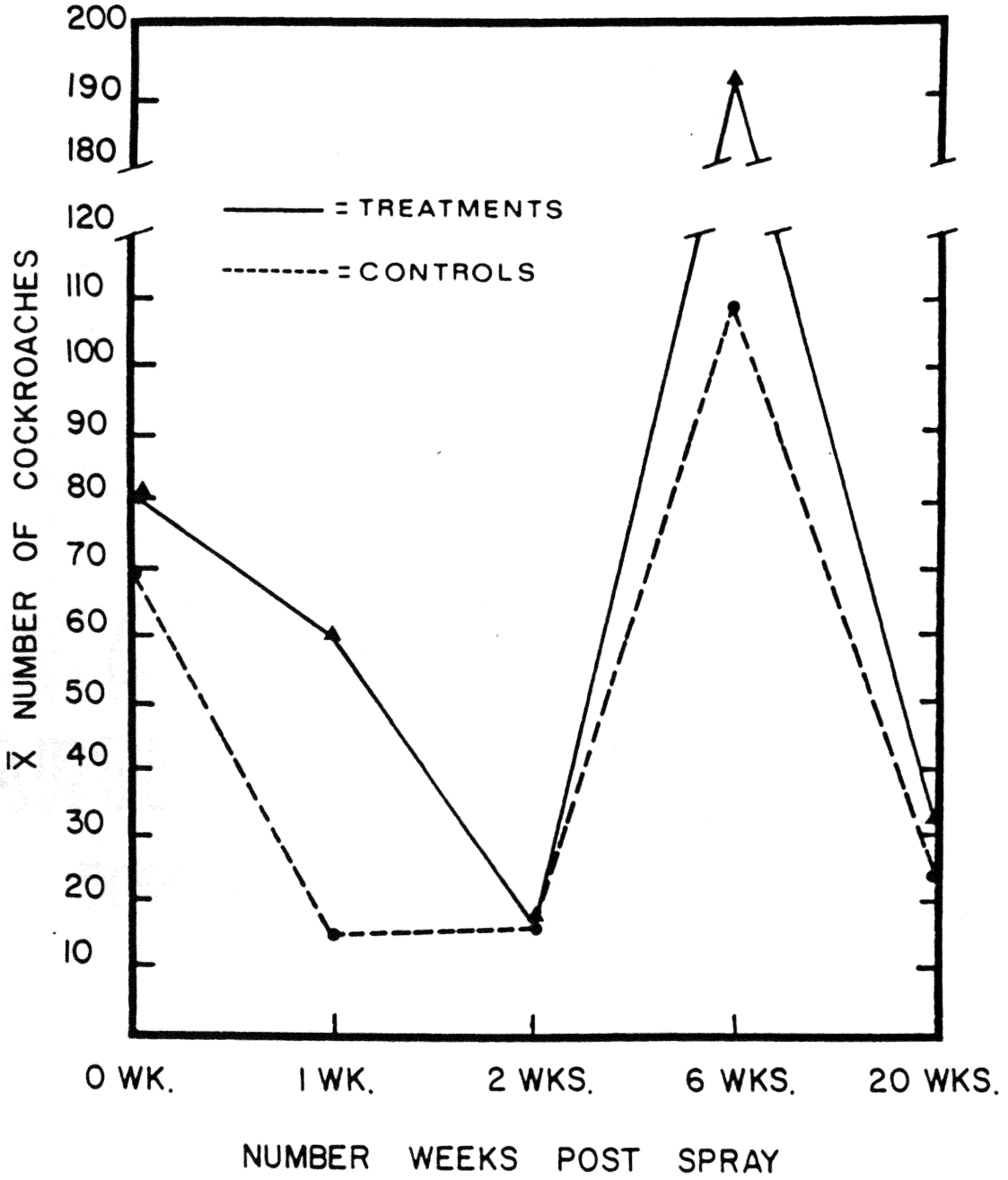
200
190
180
120
110
100
90
80
70
60
50
40
30
20
10
= TREATMENTS
= CONTROLS
X̄ NUMBER OF COCKROACHES
0 WK.
1 WK.
2 WKS.
6 WKS.
20 WKS.
NUMBER WEEKS POST SPRAY

Figure 2. A diagrammatic representation of the internal areas of the kitchen sink cabinet area. Areas sealed and not sealed are indicated.

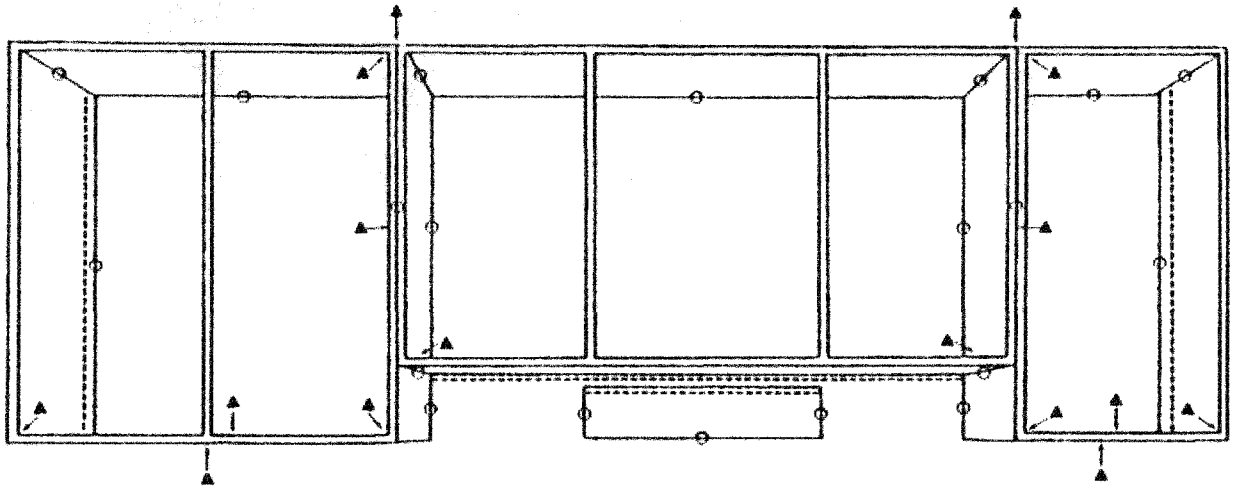

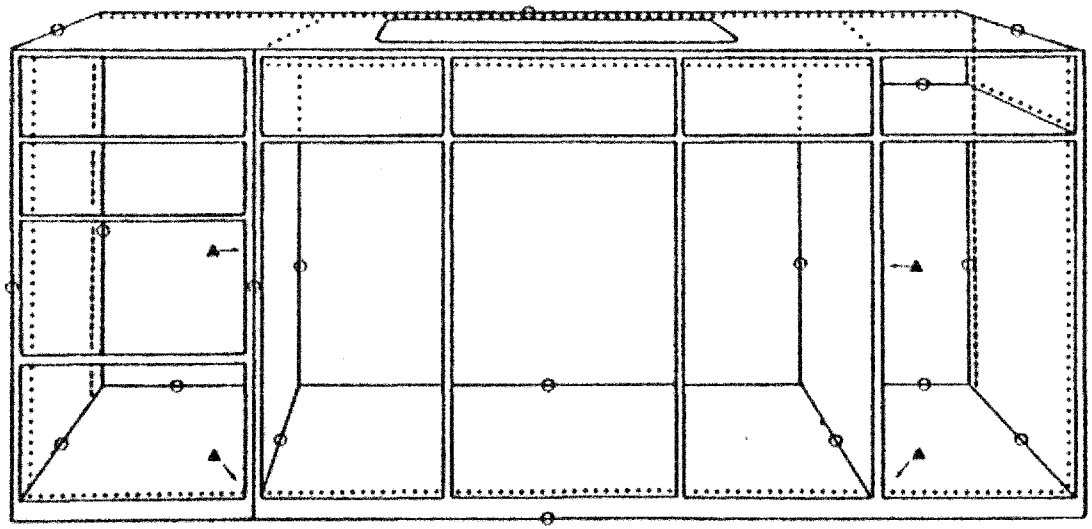

O = CAULKED

▲ = CAULKED NOT VISIBLE

···· = NOT CAULKED INTERIOR

---- = NOT CAULKED EXTERIOR

Figure 3. A diagrammatic representation of the internal areas of the refrigerator kitchen cabinet area. Areas sealed and not sealed are indicated.

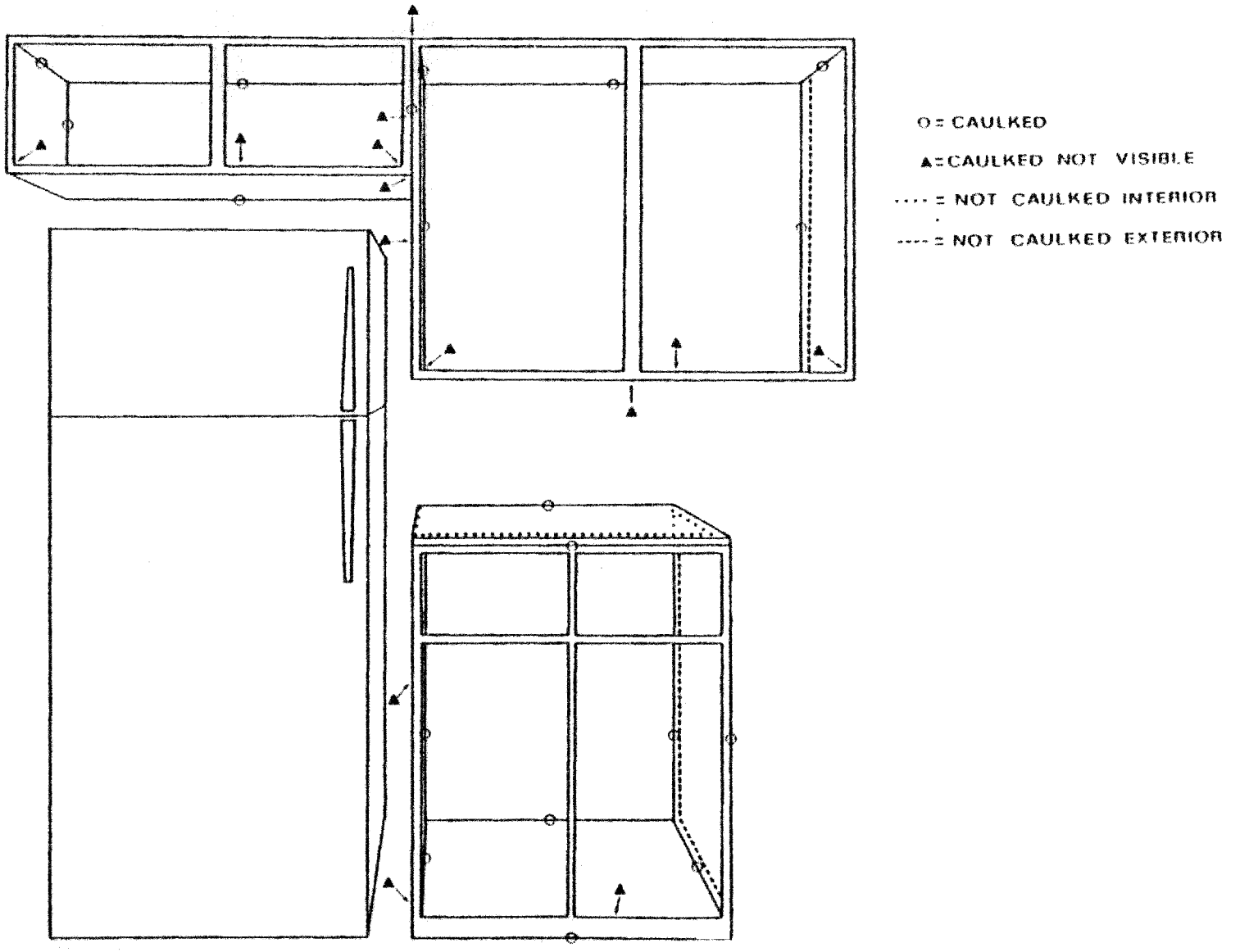
O = CAULKED
▲ = CAULKED NOT VISIBLE
···· = NOT CAULKED INTERIOR
---- = NOT CAULKED EXTERIOR

Figure 4. A diagrammatic representation of the external kitchen sink cabinet area. Areas that were sealed and not sealed are indicated.

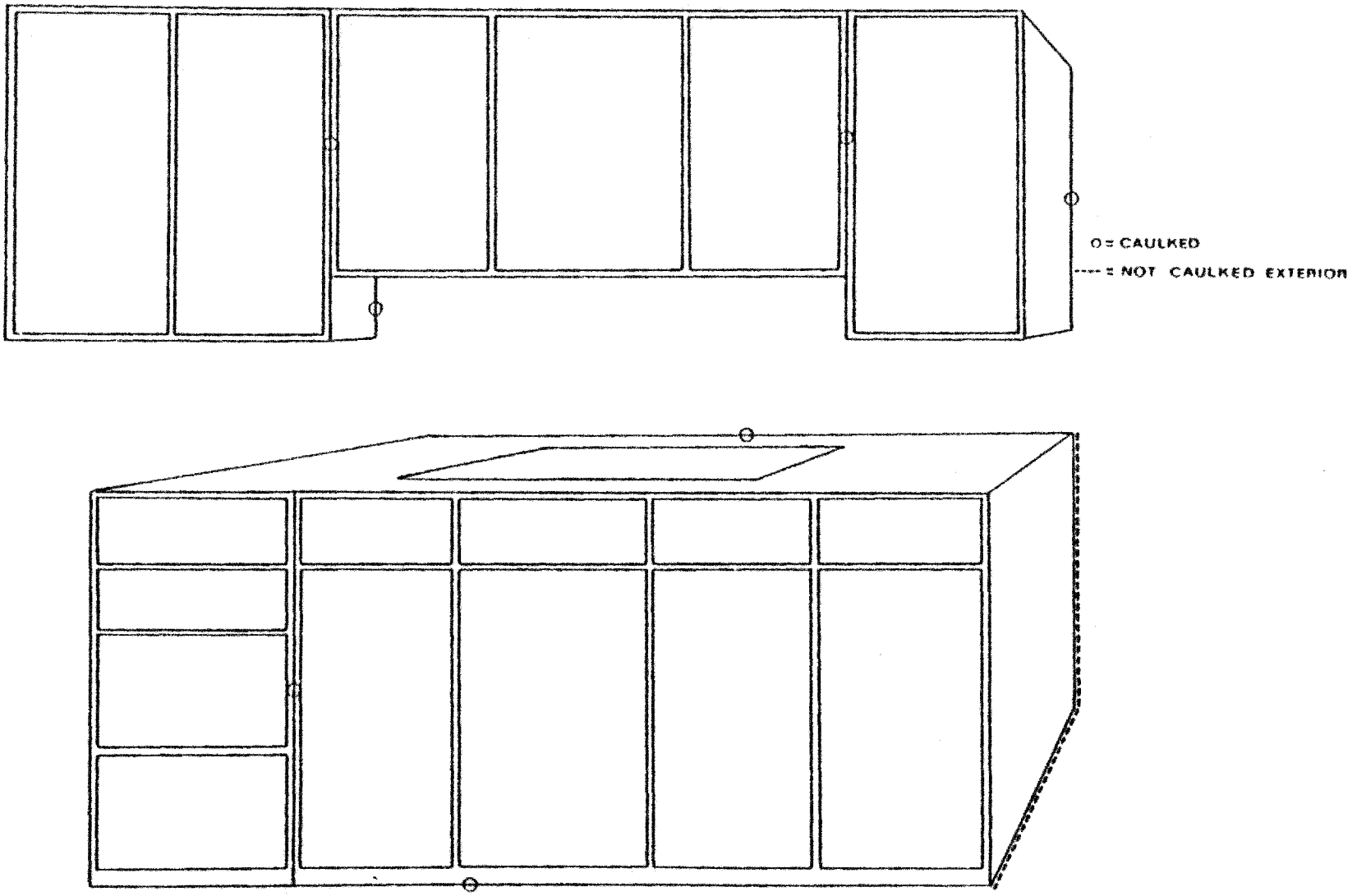
O = CAULKED
---- = NOT CAULKED EXTERIOR

Figure 5. A diagrammatic representation of the external kitchen refrigerator cabinet area. Areas that were sealed are indicated.

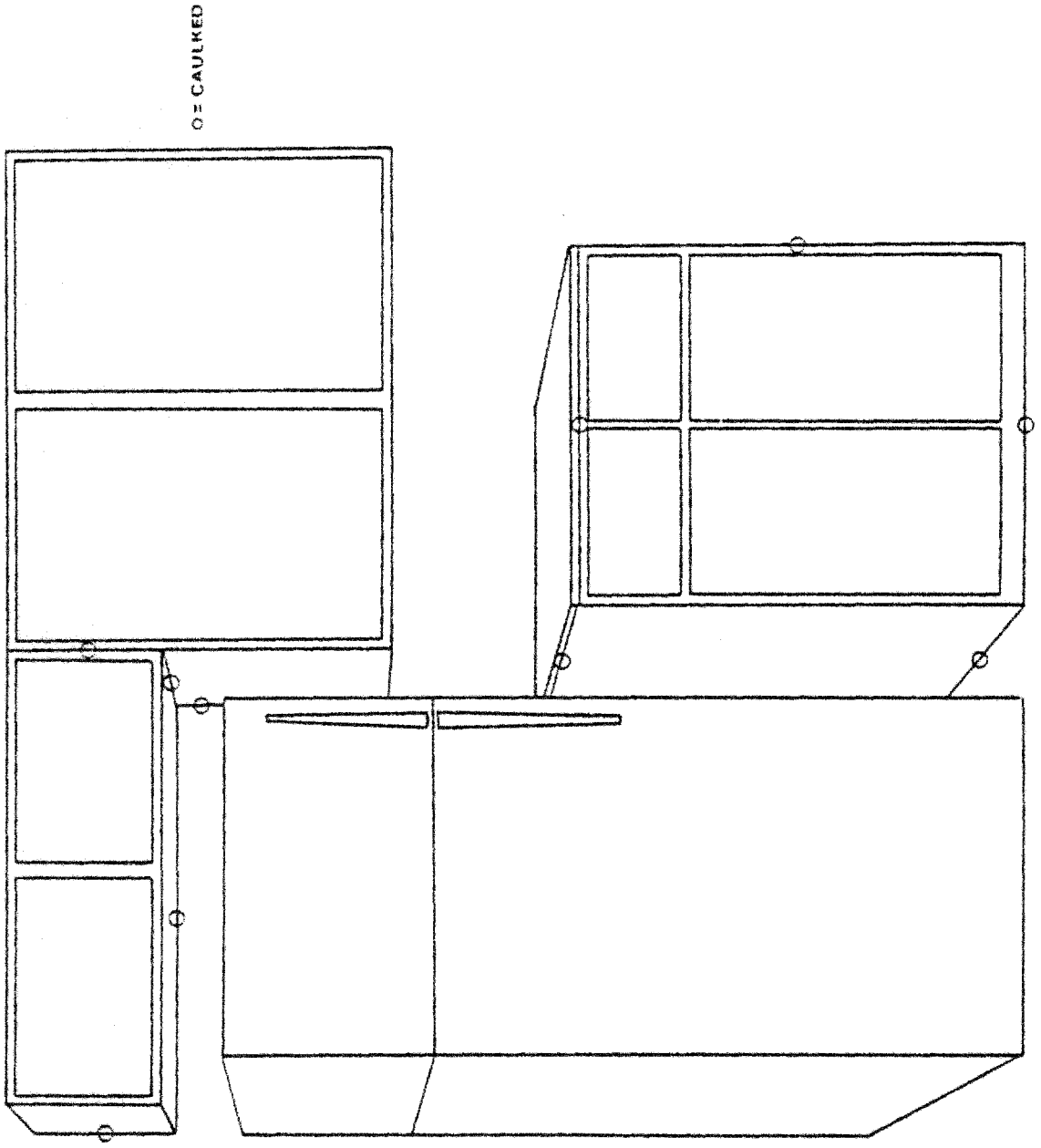
O = CAULKED

Figure 6. Habitat Isolation Treatment Apartment 1. Representation of German cockroach directional movement. Common plumbing is indicated by double bars (=) and the total number of cockroaches in the adjacent apartment is indicated by TNC.

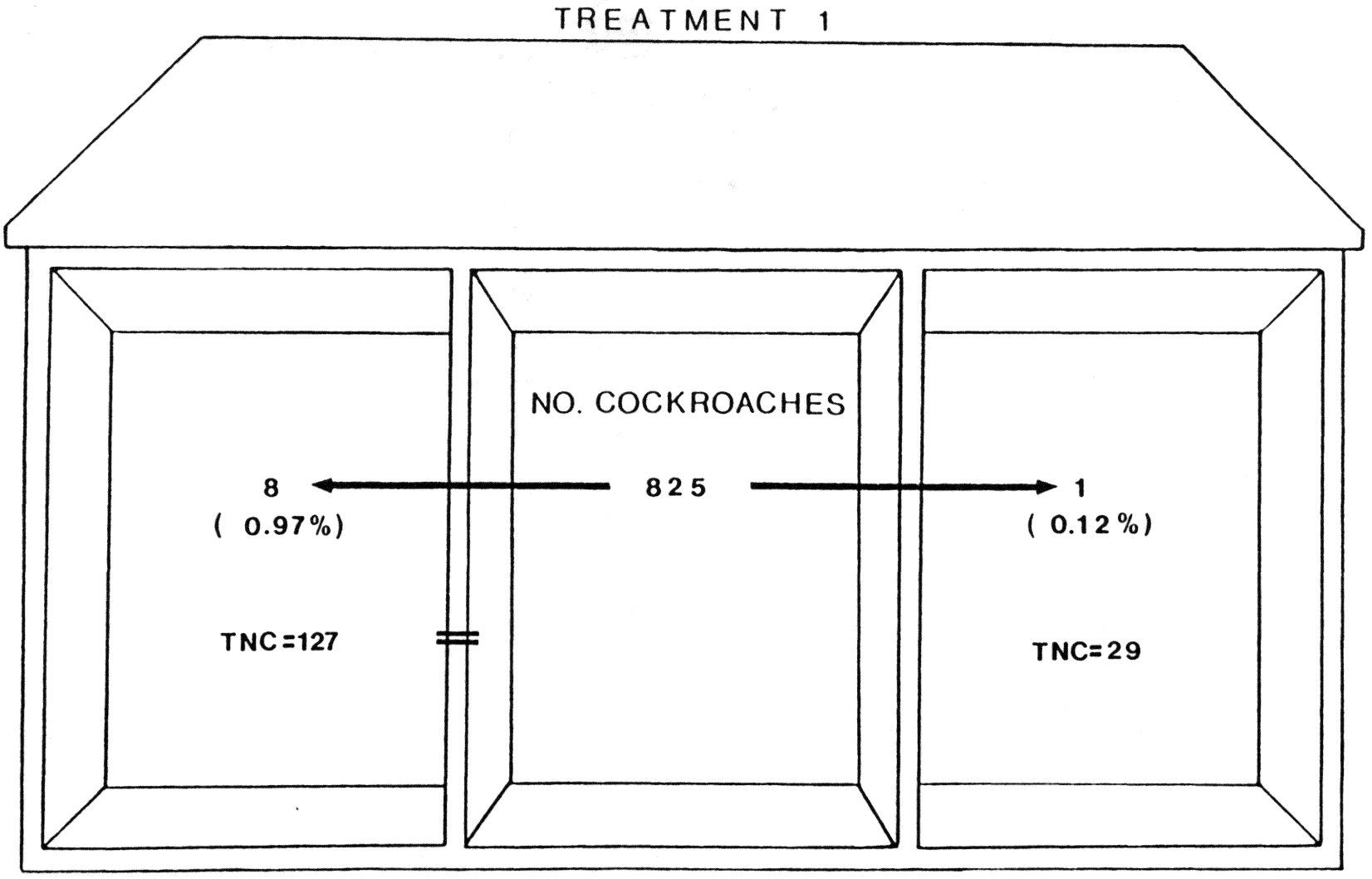
TREATMENT 1
NO. COCKROACHES
8
(0.97%)
825
1
(0.12%)
TNC=127
TNC=29

Figure 7. Habitat Isolation Treatment Apartment 2.

Representation of German cockroach directional movement. Common plumbing is indicated by double bars (=) and the total number of cockroaches in the adjacent apartment is indicated by TNC.

TREATMENT 2

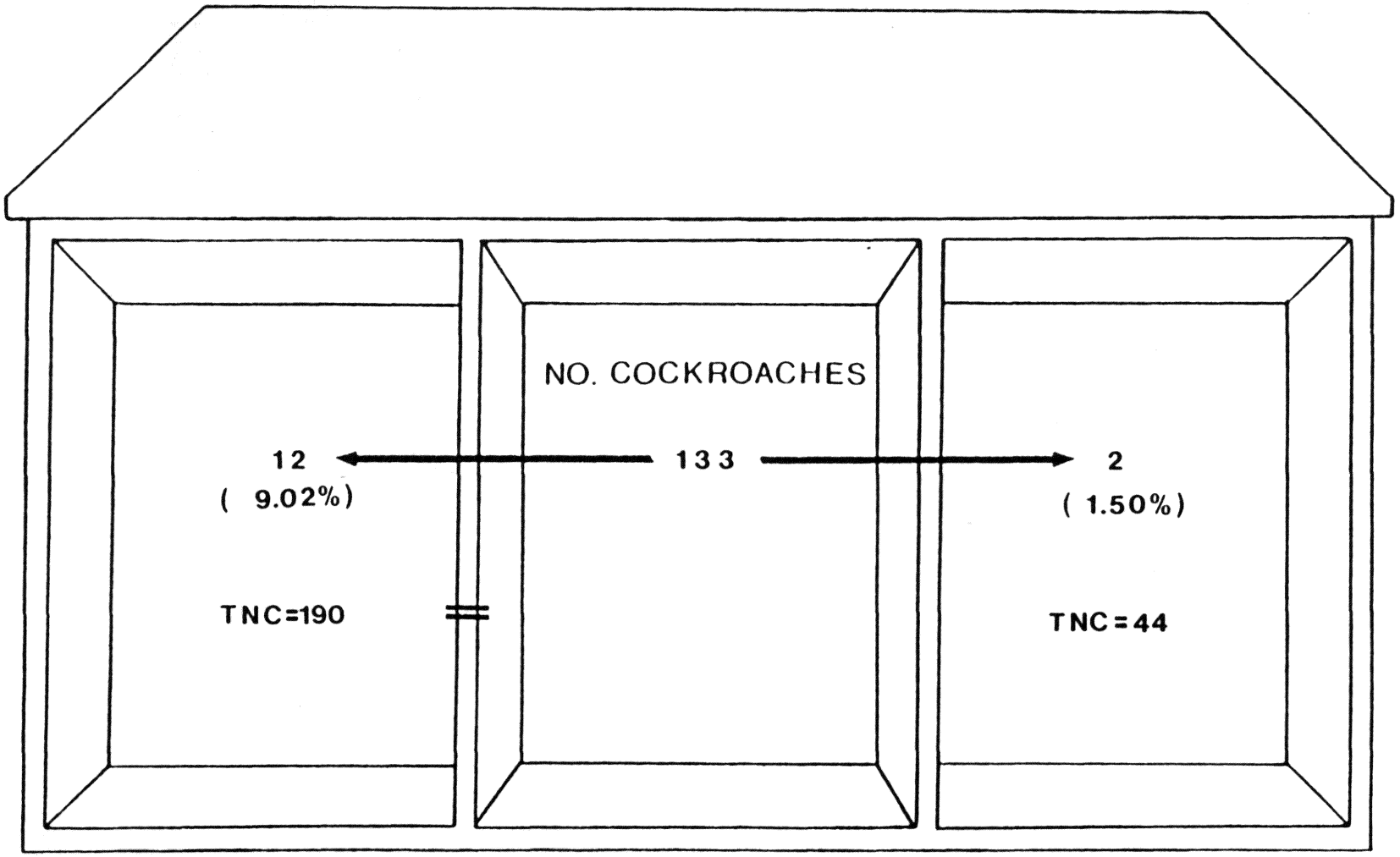

Figure 8. Habitat Isolation Treatment Apartment 3.

Representation of German cockroach directional movement. Common plumbing is indicated by double bars (=) and the total number of cockroaches in the adjacent apartment is indicated by TNC.

TREATMENT 3

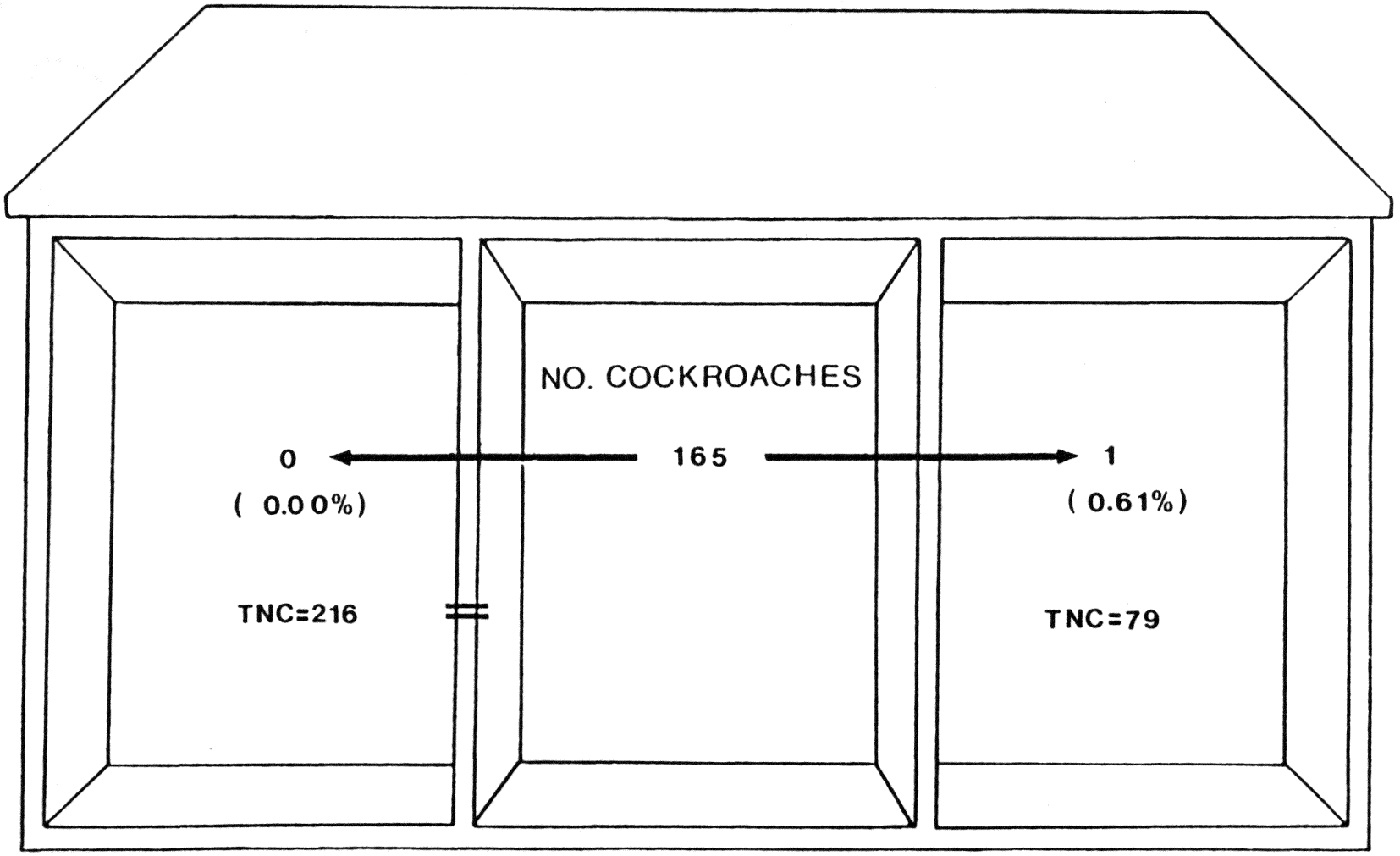

Figure 9. Habitat Isolation Control Apartment 1.

Representation of German cockroach directional movement. Common plumbing is indicated by double bars (=) and the total number of cockroaches in the adjacent apartment is indicated by TNC.

CONTROL 1

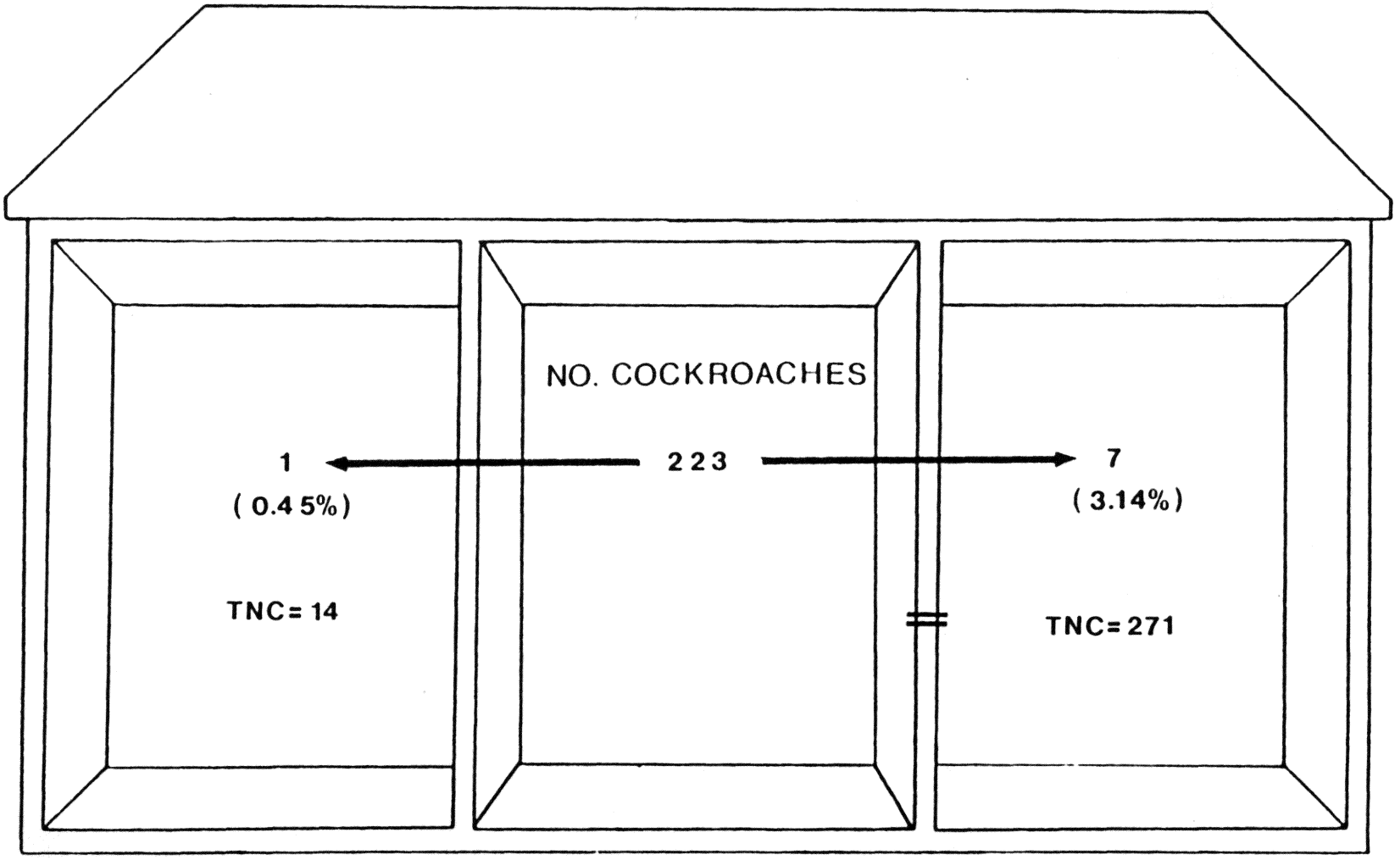

Figure 10. Habitat Isolation Control Apartment 2.

Representation of German cockroach directional movement. Common plumbing is indicated by double bars (=) and the total number of cockroaches in the adjacent apartment is indicated by TNC.

CONTROL 2

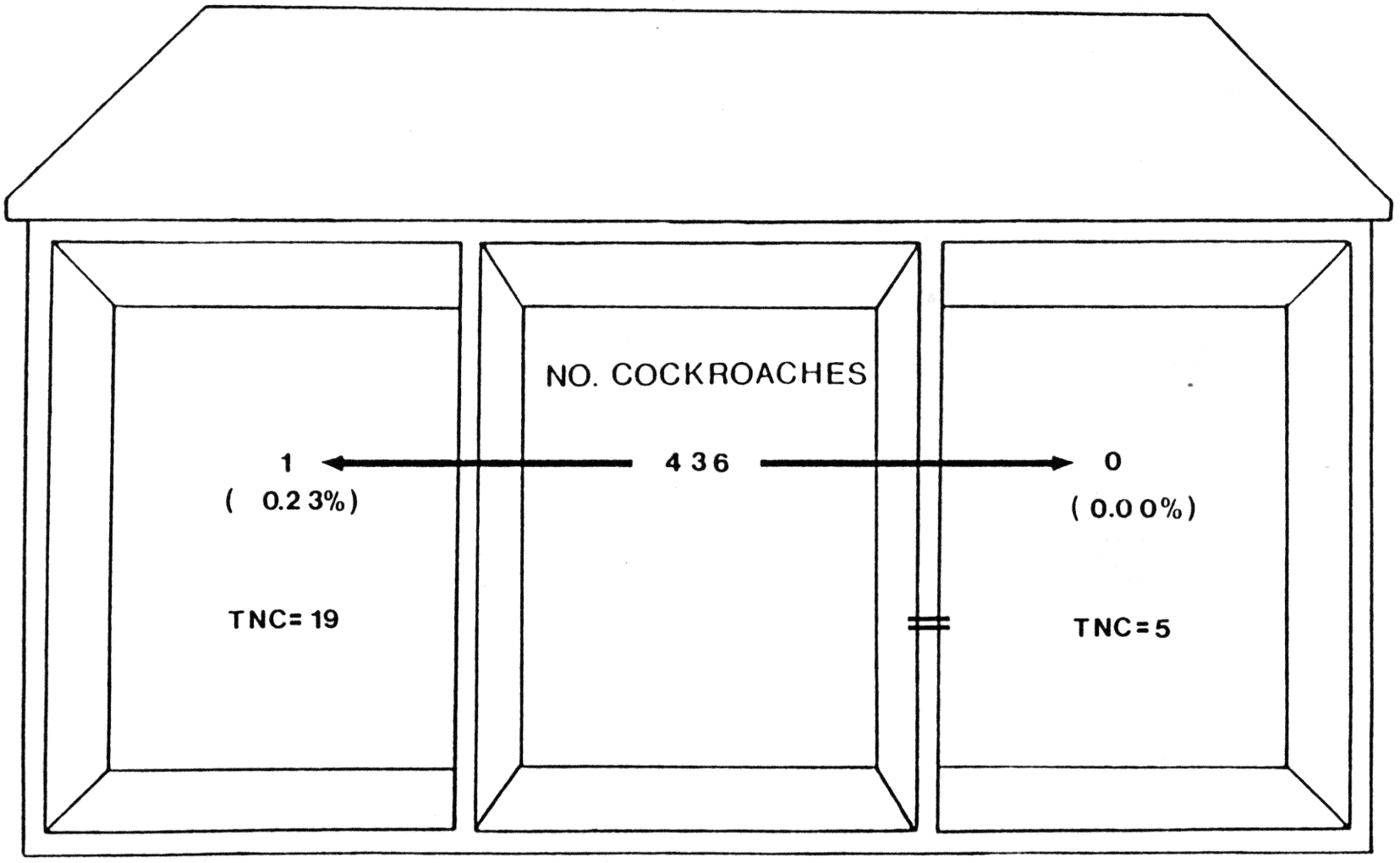

Figure 11. Habitat Isolation Control Apartment 3.

Representation of German cockroach directional movement. Common plumbing is indicated by double bars (=) and the total number of cockroaches in the adjacent apartment is indicated by TNC.

CONTROL 3

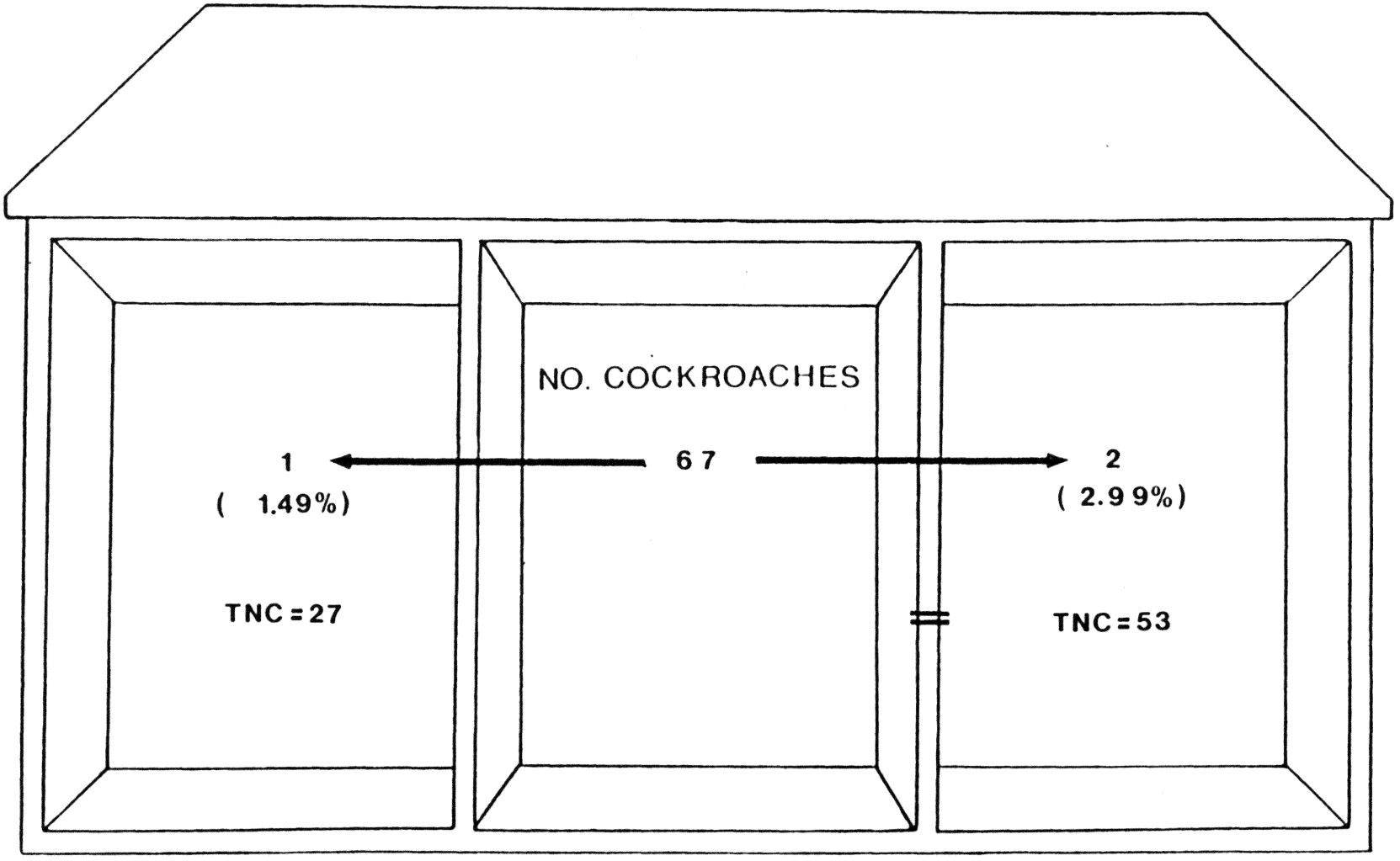

Figure 12. Habitat Isolation Control Apartment 4.

Representation of German cockroach directional movement. Common plumbing is indicated by double bars (=) and the total number of cockroaches in the adjacent apartment is indicated by TNC.

CONTROL 4

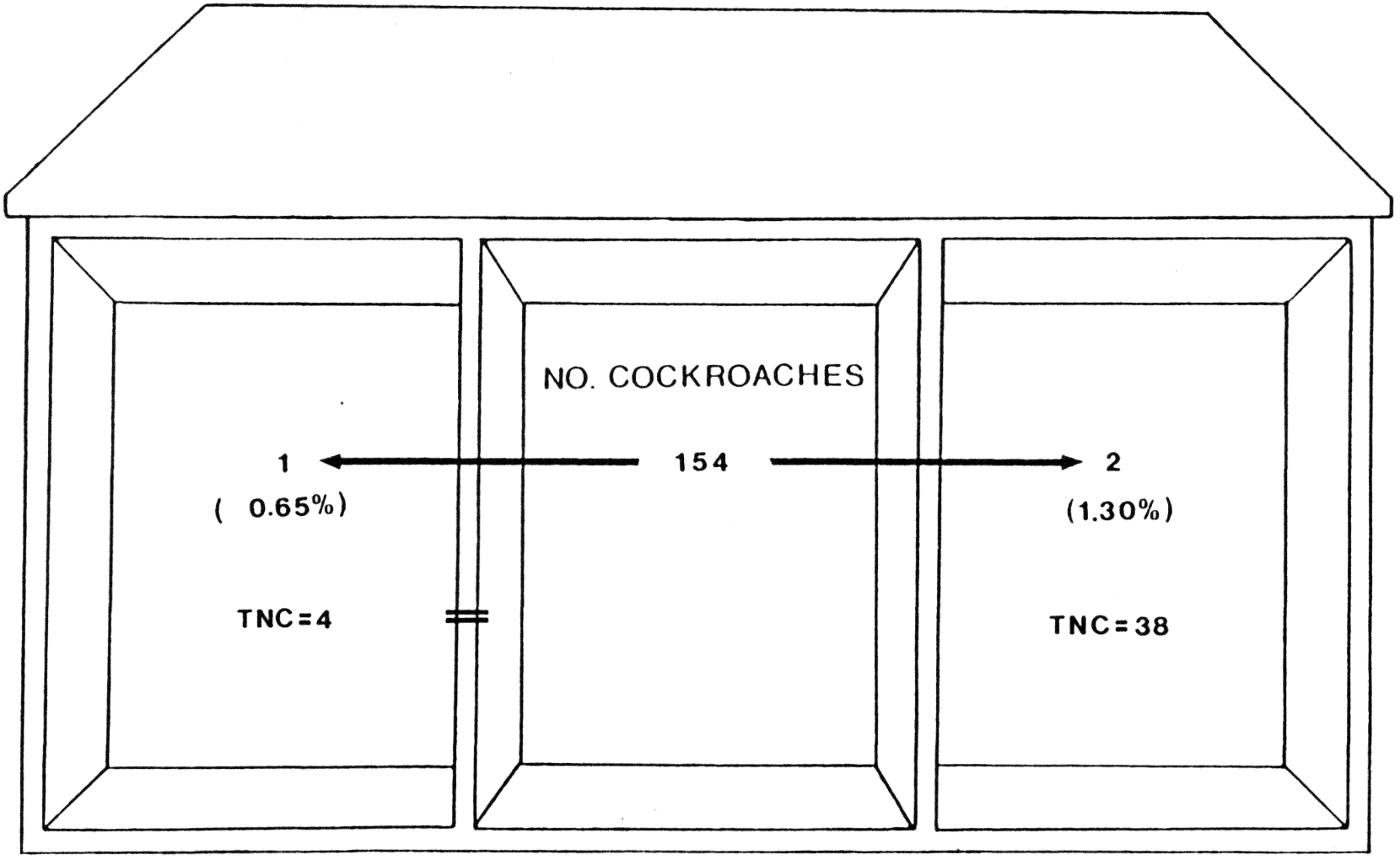

Figure 13. Habitat Isolation Control Apartment 5.

Representation of German cockroach directional movement. Common plumbing is indicated by double bars (=) and the total number of cockroaches in the adjacent apartment is indicated by TNC.

CONTROL 5

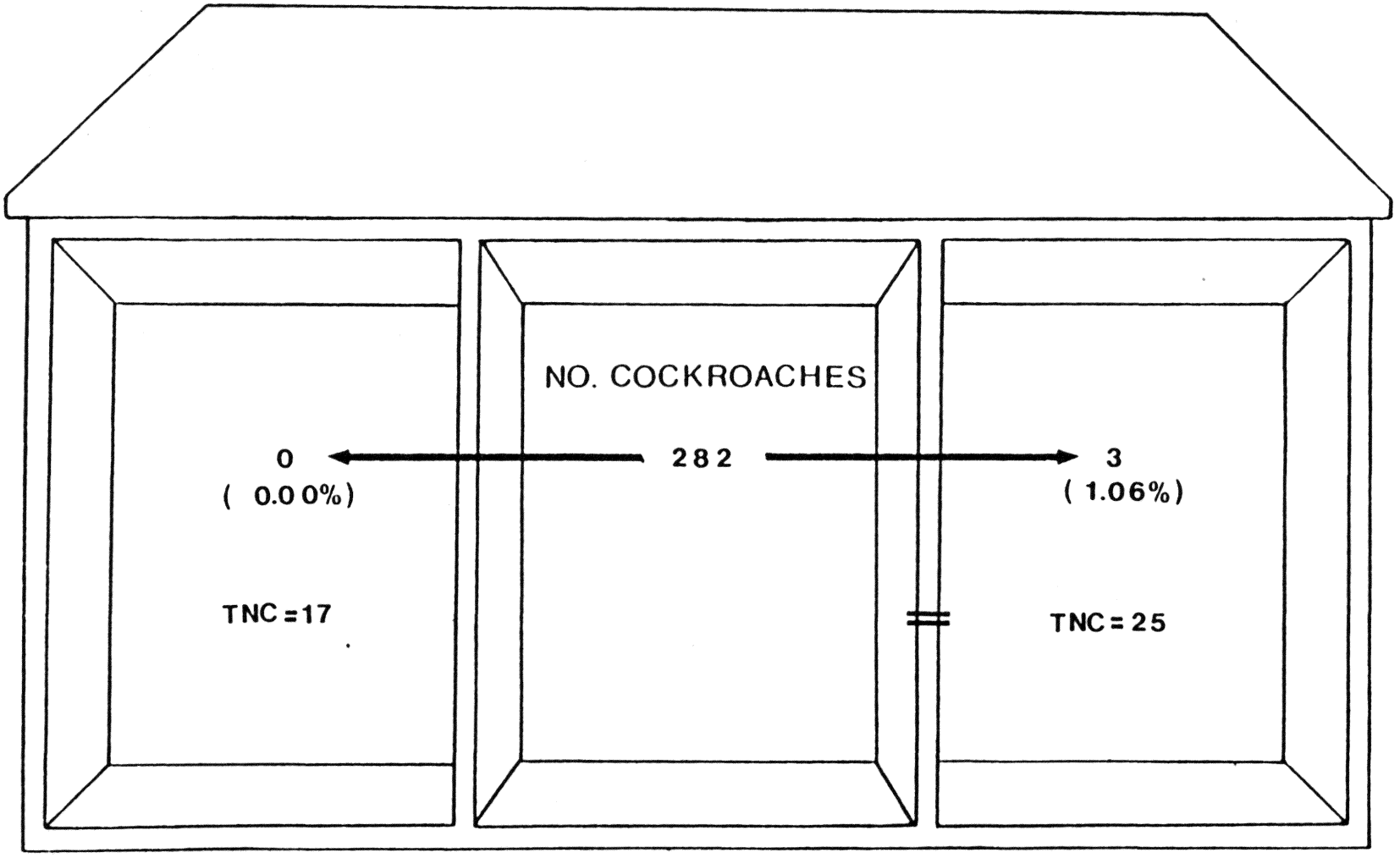

Table 1. Percentage control of German cockroaches in apartments following caulking and application of 0.5% chlorpyrifos.

LOCATION	PERCENTAGE CONTROL			
	1 WK[1]	2 WK	6 WK	20 WK
Apartment 1	-30a	85a	53a	33a
Apartment 2	58a	38a	53a	49a
Apartment 3	82a	93a	-41a	96a
Control 1	45a	91a	73a	82a
Control 2	82a	76a	-69a	76a

[1]Percents within columns followed by same letter are not significantly different at the 0.10% level. (Wilcoxon paired sample T-test)

Table 2. Total number of German cockroaches trapped after caulking and application of 0.5% chlorpyrifos in water.

LOCATION	COCKROACHES TRAPPED				
	PRESPRAY[1]	1 WK[2]	2 WK	6 WK	20 WK
Apartment 1	110a	143a	16a	52a	74a
Apartment 2	45a	19a	28a	21a	23a
Apartment 3	85a	15a	6a	120a	3a
Control 1	11a	6a	1a	3a	31a
Control 2	127a	23a	30a	214a	31a

[1]Prespray column refers to cockroaches trapped after harborage limitation but before insecticide spraying.

[2]Numbers within column followed by same letter were not significantly different at the 0.1% level. (Wilcoxon paired sample T-test).

Table 3. Total number of German cockroach males trapped after caulking and application of 0.5% chlorpyrifos in water.

LOCATION	COCKROACHES TRAPPED				
	PRESPRAY[1]	1 WK[2]	2 WK	6 WK	20 WK
Apartment 1	43a	39a	6a	31a	25a
Apartment 2	18a	11a	18a	8a	6a
Apartment 3	36a	4a	3a	31a	2a
Control 1	6a	5a	1a	2a	13a
Control 2	45a	9a	7a	74a	8a

[1]Prespray column refers to cockroaches trapped after harborage limitation but before insecticide spraying.

[2]Numbers within column followed by same letter were not significantly different at the 0.1% level. (Wilcoxon paired sample T-test.

Table 4. Total number of German cockroach females trapped after caulking and application of 0.5% chlorpyrifos in water.

LOCATION	COCKROACHES TRAPPED									
	PRESPRAY[1]		1 WK[2]		2 WK		6 WK		20 WK	
Apartment 1	13a	(0)a[3]	38a	(7)	6a	(2)	12a	(1)	13a	(1)
Apartment 2	4a	(2)a	4a	(3)	4a	(3)	7a	(1)	3a	(0)
Apartment 3	7a	(4)a	4a	(1)	1a	(2)	11a	(12)	0a	(0)
Control 1	1a	(1)a	0a	(0)	0a	(0)	1a	(0)	2a	(3)
Control 2	16a	(8)a	9a	(0)	6a	(1)	48a	(20)	13a	(2)

[1]Prespray column refers to cockroaches trapped after harborage limitation but before insecticide spraying.

[2]Numbers within column followed by same letter were not significantly different at the 0.1% level (Wilcoxon paired sample T-test).

[3]Numbers within parentheses refer to females with visible ootheca.

Table 5. Total number of German cockroach nymphs trapped after caulking and application of 0.5% chlorpyrifos in water.

LOCATION	COCKROACHES TRAPPED				
	PRESPRAY[1]	1 WK[2]	2 WK	6 WK	20 WK
Apartment 1	54a	59a	2a	8a	35a
Apartment 2	21a	1a	3a	5a	14a
Apartment 3	34a	6a	0a	66a	1a
Control 1	3a	1a	0a	0a	2a
Control 2	58a	5a	16a	72a	8a

[1]Prespray column refers to cockroaches trapped after harborage limitation but before insecticide spraying.

[2]Numbers within column followed by same letter were not significantly different at the 0.1% level. (Wilcoxon paired sample T-test).

Table 6. Percentage movement of German cockroaches (adults) after application of 0.25% synergized pyrethrins.

LOCATION	COCKROACHES TRAPPED					
	TOT MARKED FOCUS APTS	TOT RECAPT FOCUS APTS	# MARKED & MOVED	P/R[1]	R/M[2]	P/M[3]
Treatment 1	596	71	9	12.7a	12.7a	1.5a[4]
Treatment 2	96	34	12	35.4a	35.3a	12.5a
Treatment 3	109	5	1	4.6a	20.0a	0.9a
Control 1	109	40	6	36.7a	15.0a	5.5a
Control 2	208	36	1	17.3a	2.8a	0.5a
Control 3	48	10	3	20.8a	30.0a	6.3a
Control 4	141	13	3	9.2a	23.1a	2.1a
Control 5	167	31	2	18.6a	6.5a	1.2a

[1]P/R = Probability of Recapture

[2]R/M = Probability of Movement and Recapture

[3]P/M = Percentage movement based on total numbers of German cockroaches marked in the focus apartments.

[4]Numbers in column followed by same letter are not significantly different at the 0.1% level. (Wilcoxon paired sample T-test).

Table 7. Movement of German cockroaches between apartments after application of 0.25% synergized pyrethrins.

LOCATION	MALES		FEMALES		FEMALES WITH OOTHECA	
	NUMBER MOVED	TOTAL MARKED	NUMBER MOVED	TOTAL MARKED	NUMBER MOVED	TOTAL MARKED
Treatment 1	2	384	6	155	1	57
Treatment 2	7	43	2	42	3	11
Treatment 3	1	50	0	49	0	10
Control 1	3	59	0	41	3	9
Control 2	1	115	0	77	0	16
Control 3	3	32	0	14	0	2
Control 4	3	51	0	47	0	43
Control 5	2	80	0	70	0	17
Totals	22	814	8	495	7	265

Table 8. Percentage movement of German cockroaches (adults and immatures) after application of 0.25% synergized pyrethrins.

LOCATION	COCKROACHES TRAPPED		
	NUMBER MOVED	TOTAL MARKED	PERCENTAGE MOVEMENT[1]
Treatment 1	9	825	0.1a
Treatment 2	14	133	0.1a
Treatment 3	1	165	0.01a
Control 1	8	223	0.03a
Control 2	1	436	0.00a
Control 3	3	67	0.04a
Control 4	3	154	0.02a
Control 5	3	282	0.01a

[1]Numbers in column followed by same letter are not significantly different at the 0.1% level. (Wilcoxon paired sample T-test).

LITERATURE CITED

Akers, R.C. 1978. Movement behavior of *Blattella germanica* (L.). M.S. Thesis. Viriginia Polytechnic Institute and State University. Blacksburg, VA. 65 p.

Akers, R.C. and W.H Robinson. 1981. Spatial pattern and movement of German cockroaches in urban, low income apartments. (Dictyoptera:Blattelidae). Proc. Entomol. Soc. Wash. 83:168-172.

Ash, N. and B. Greenberg. 1980. Vector potential of the German cockroach (Dictyoptera:Blattellidae) in dissemination of *Salmonella enteritidis* serotype *typhimurium*. J. Med. Entomol. 17:417-423.

Barson, B. 1979. Cockroach control and its importance. Int. Pest Control 21 (4):93-95.

Bernton, H.S. and H. Brown. 1964. Insect allergy. Preliminary studies of the cockroach. J. Allergy 35:506-513

Bernton, H.S. and H. Brown. 1967. Cockroach allergy. II. The relation of infestation to sensitation. S. Med. J. 60:852-855.

Bernton, H.S. and H. Brown. 1970a. Cockroach allergy: Age of onset of skin reactivity. Ann. Allergy 28:420-422.

Bernton, H.S. and H. Brown. 1970b. Insect allergy: The allergenicity of the excrement of the German cockroach, *B. germanica*. Ann. Allergy 28:543-547.

Berthold, R. Jr. and B.R. Wilson. 1967. Resting behavior of the German cockroach, *Blattella germanica*. Ann. Entomol. Soc. Am. 60:347-351.

Bulow, F.J. and D. G. Huggins. 1968. Mark-and-recapture methods for studing domestic cockroach populations. Proc. Iowa Acad. Sci. 75:447-456.

Burden, G.S. 1974. Method of testing for resistance to chlorpyrifos and propoxur. Pest Control 42(7): 18.

Bush, M.M. 1968. A study of the knowledge and attitudes of the middle and upper income class urban dweller toward chemical pesticides. M.S. Thesis. Virginia Polytechnic Institute and State University. Blacksburg, VA. 126 pp.

Chadwick, P.R. 1976. Application of different pyrethroids against cockroaches. Int. Pest Control 1(1):15-18.

Cochran, D.G. 1973. Inheritance and linkage of pyrethrins resistance in the German cockroach. J. Econ. Entomol. 66:27-30.

Cochran, D.G., J.M. Grayson and A.B.Gurney. 1975. V. Cockroaches and control. WHO/VBL/75.576:1-48.

Cornwell, P.B. 1968. The cockroach. Vol 1. Hutchinson, London. 391 pp.

Cornwell, P.B. 1977. Can cockroaches cause asthma? Brit. Med. J. 1:1159.

Ebeling, W. 1971. Sorptive dust for pest control. Ann. Rev. Entomol. 16:123-158.

Ebeling, W. 1978. Past, present and future directions in the management of structure-infesting insects. *In* 'Perspectives in Urban Entomology' G.W. Frankie and C.S. Koehler Eds. Academic Press, N.Y. p. 227-236.

Ebeling, W., R.E. Wagner and D.A. Reirerson. 1966. Influence of repellancy on the efficacy of blatticides. I. Learned modification of behavior of the German cockroach. J. Econ. Entomol. 59:1374-1388.

Ebeling, W., D.A. Reirerson and R.E. Wagner. 1967. Influence of repellancy on the efficacy of blatticides. II. Laboratory experiments with German cockroaches. J. Econ. Entomol. 60:1375-1390.

Ebeling, W., D.A. Reirerson and R.E. Wagner. 1968. Influence on the efficiacy of blatticides. III. Field experiments with German cockroaches with notes on three other species. J. Econ. Entomol. 67:751-761.

Ebeling, W., R.E. Wagner and D.A. Reirerson. 1969. Insect proofing during building construction. Calif. Agric. 23(5):4-7.

Fisher, R. G. and J.T. Syverton. 1951. The cockroach as an experimental vector of Coxsackie virus. J. Trop. Med. Hyg. 31:238-242.

Flynn, A.D. and H.F. Schoof. 1971. Control of German cockroaches aboard U.S. Naval surface ships on the east coast. J. Econ. Entomol. 64 :1176-1179.

Frankie, G.W. and H. Levinson. 1978. Insect problems and insecticide use: Public opinion, information behavior. *In* 'Perspectives in Urban Entomology' G.W. Frankie and C.S. Koehler Eds. Academic Press, New York. 417 pp.

Frishman, A.M. and I.E. Alcamo 1977. Domestic cockroaches and human bacterial disease. Pest Control 45(6):16-20,46.

Gould, G.E. 1941. The effect of temperature upon development of cockroaches. Proc. Indiana Acad. Sci. 50:242-248.

Gould, G.E. and H.O. Deay. 1940. The biology of six species of cockroaches which inhabit buildings. Purdue Univ. Agr. Exp. Sta. Bull. 451:1-31.

Graham, F.H. 1967. A comparative study of users and nonusers of chemical pesticides among middle class urban women in Roanoke and Richmond, based on educational attainment and other selected variables. M.S. Thesis. Virginia Polytechnic Institute and State University. Blacksburg VA. 86pp.

Grayson, J.M 1960. Insecticidal resistance and control in cockroaches. Misc. Public Entomol. Soc. Am. 2:55-58.

Grayson, J.M. 1961. Resistance to diazinon in the German cockroach. Bull. World Health Org. 24:563-565.

Grayson, J.M. 1964. Cockroach control in North America. Ag. Vet. Chem. Ag. Engin. 4(5):138-141.

Grayson, J.M. 1966. Recent developments in the control of some arthropods of public health and veterinary importance.----Cockroaches. Bull. Entomol. Soc. Am. 12(6):333-338.

Grayson, J.M. and B.D. Perkins. 1961. Results of 1960 cockroach control tests at VPI. Pest Control 29(1) 30,32,34.

Grothaus, R.H., D.E. Weidhaas, D.G. Haile and G.S. Burden. 1981. Superroach challenged by microcomputer; think growth rate not percent kill in controlling the German cockroach. Pest Control 49(1):16-18.

Gunn, D.L. 1935. The temperature an humidity relations of the cockroach. III. A comparison of temperature preference, and rates of dessication and respiration of *Periplaneta americana*, *Blatta orientalis*, and *Blattella germanica*. J. Exp. Biol. 12:185-190.

Gupta, A.P., Y.T. Das, J.R. Trout, W.H Gusciora, D.S. Adam and G.T. Burdash. 1973. Effectiveness of spray-dust-bait combinations and the importance of sanitation on the control of German cockroaches in an inner city area. Pest Control 41(9): 20,22,24,26,58,60-62.

Guthrie, D.M. and A.R. Tindall. 1968. The Biology of the Cockroach. St. Martins Press, N.Y. 408pp.

Haines, T.W. and E.C. Palmer. 1955. Studies of distribution and habitat of cockroaches in Southwestern Georgia, 1952-1953. Am. J. Trop. Med. Hyg. 4:1131-1134.

Heal, R.E., K.B. Nash and M. Williams. 1953. An insecticide-resistant strain of the German cockroach from Corpus Christi, Texas. J. Econ. Entomol. 46:385-386.

Jansen, W.A. and S.E. Wedberg. 1952. The common house roach, *Blattella germanica* (L.) as a vector of *Salmonella typhimurium* and *Salmonella typhosa*. Am. J. Trop. Med. Hyg. 1:337-343.

Kang, B. 1976. Study on cockroach antigen as probable causitive agent in bronchial asthma. J. Allergy Clin. Imm. 58:357-365.

Karner, M., R.G. Price and L.A. Roth 1977. Laboratory evalution of crack and crevice treatment for control of *Blattella germanica* by using various nozzle types, nozzle heights and crack widths. J. Econ. Entomol. 781:105-106.

Katz, A.J., W.J. Collins and R.V. Skavaril. 1973. Resistance in the German cockroach (Orthoptera:Blattellidae): The inheritance of diazinon resistance and cross resistance. J. Med. Entomol. 10:549-604.

Keil, C.B. 1981. Structure and estimation of shipboard German cockroach (*Blattella germanica*) populations. Environ. Entomol. 10:534-542.

Klunker, R. 1977. Studies on the ability on the German cockroach to slip through narrow cracks. Z. Gesamte Hyg. Ihre Grenzgeb. 23:919-923.

Kruse, C.W. 1948. Roach control. Soap Spec. Chem. 24(11): 131,133,135,137,139,169.

Kunkel, J.G. 1966. Development and the availibility of food in the German cockroach, *Blattella germanica* (L.). J. Insect Phys. 12:227-235.

LaBrecque, G.C., D.L. Bailey, D.W. Meifert and D.E. Weidhass. 1975. Density estimates and daily mortality rate evaluations of Stable Fly (*Stomoxys calcitrans* (Diptera:Muscidae)) populations in field cages. Can. Entomol. 107:597-600.

Mallis, A. 1960. Handbook of Pest Control. third ed. MacNair-Dorland Co., N.Y. 1032pp.

Mallis, A. 1964. Cockroaches. *In* 'Handbook of Pest Control' fourth ed. MacNair-Dorland Co., N.Y. pp.171-172.

Mampe, C.D. 1972. The relative importance of household insects in the continental United States. Pest Control 40(12):24,26-27,38.

Metzger, R. and K.H. Trier. 1975. Zur bedeutung der aggregationspheromone von *Blattella germanica* und *Blatta orientalis*. Angew. Parasitol. 16: 16-27.

Moffit, A. R. and D.J. Albano. 1972. Codling moths: Fluorescent powders as markers. Environ. Entomol. 1:750-753.

Moore, R.C. 1971. Chemical control of German cockroaches in urban apartments. Conn. Agric. Exper. Sta. Bull., New Haven, No. 717. 11 pp.

Moth. J.J. and J.S.F. Barker. 1975. Micronized fluorescent dusts for marking *Drosophila* adults. J. Nat. History. 9:393-396.

Mueller, P. 1978. The effect of temporary deprivations of food and water on the development of laboratory colonies of the German cockroach (*Blattella germanica* (L.)). Z. Gesamte Hyg. Ihre Grenzgeb. 24:122-126.

Norris, K.R. 1957. A method of marking Calliphoridae (Diptera) during emergence from the puparium. Nature 180:1002.

Ogata, K., I. Tanaka and T. Ogawa. 1975. Studies on establishing factors of domiciliary cockroaches. 1. Field surveys of the distribution of domiciliary cockroaches in Toykyo and Kawasaki. Jap. J. Sanit. Zool. 26: 241-245.

Olsen, T.A. and H.E. Reuger. 1950. Experimental transmission of *Salmonella oranienberg* through cockoaches. Public Health Rep. 65:531-540.

Ono, S. and H. Tsujii. 1972. Effects of food amount upon population equilibrium, age composition and response of individuals to traps in experimental populations of the German cockroach, *Blattella germanica* (L.). Jap. J. Sanit. Zool. 23:77-81.

Owens, J.M. 1980. Some aspects of German cockroach population ecology in urban apartments. Ph.D. Thesis. Purdue Univ. West Lafayette, Indiana. 118pp.

Piper, G.L. and G. W. Frankie. 1978. Integrated management of urban cockroach populations. *In* 'Perspectives in Urban Entomology' G.W. Frankie and C.S. Koehler Eds. Academic Press, N.Y. p. 249-266.

Rau, P. 1924. Biology of the roach. Trans. Ill. St. Acad. Sci., 25:57-59.

Rau, P. 1943. How the cockroach deposits its eggcase; a study in insect behavior. Ann. Entomol. Soc. Am. 36:221-226.

Reeves, W.C., B. Brookman and W.M. Hammon. 1948. Studies on the flight range of certain *Culex* mosquitoes, using a fluorescent-dye marker, with notes on *Culiseta* and *Anopheles*. Mosquito News 8:61-69.

Reirerson, D.A. and M.K. Rust. 1977. Trapping, flushing, and counting German cockroaches. Pest Control 45(10)40-44.

Reirerson, D.A., M.L. Rust and R.E. Wagner. 1979. German cockroaches: The status of control and methods to evaluate control agents. Pest Control 43(7):14, 16,18,19,78.

Ross, H.H. 1929. The life history of the German cockroach. Trans. Ill. St. Acad. Sci. 21:84-93.

Ross, M.H. 1977. Use of a double translocation heterozygote to supress the growth of a laboratory population of the German cockroach. Ann. Entomol. Soc. Am. 70:841-844.

Ross, M.H. 1981. Trapping experiments with the German cockroach, *Blattella germanica* (L.) (Dictyoptera:Blattellidae), showing differential effects from the type of trap and the environmental resources. Proc. Entomol. Soc. Wash. 83:160-163.

Ross, M.H., C.B. Keil and D.G. Cochran 1981. The release of serile males into natural populations of the German cockroach *Blattella germanica*. Entomol. Exp. Appl. 30:241-253.

Ross, M.H. and C.G. Wright. 1977. Characteristics of field collected populations of the German cockroach. (Dictyoptera:Blattellidae). Proc. Entomol. Soc. Wash. 79:411-416.

Ross, M.H.and D.G. Cochran. 1973. German cockroach genetics and its possible use in control measures. Patna J. Med. 47:325-337.

Ross, M.H. and D.G. Cochran. 1976. Sterility and lethality in crosses involving two translocation heterozygotes of the German cockroach, *B. germanica* (L.). Experientia 32:445-447.

Roth, L.M. and E.R. Willis. 1952. A study of cockroach behavior. Am. Midl. Nat. 47:66-129.

Roth, L.M. and E.R. Willis. 1954. The reproduction of cockroaches. Smithsonian Misc. Coll. 122:1-49.

Roth, L.M. and E.R. Willis 1957. The medical and veterinary importance of cockroaches. Smithsonian Misc. Coll. 141:1-470.

Rueger, M.E. and T.A. Olsen. 1969. Cockroaches (Blattaria) as vectors of food poisoning and food infection organisms. J. Med. Entomol. 6:185-189.

Rust, M.K. and D.A. Reirerson. 1976a. Using pheromone extract to reduce repellency of blatticides. J. Econ. Entomol. 70:34-38.

Rust, M.K. and D.A. Reirerson. 1976b. Increasing blatticidal efficiency with aggregation pheromone. J. Econ. Entomol. 70:693-696.

Sheppard, D.C., G.H. Wilson and J.A. Hawkins. 1973. A device for self-marking of Tabanidae. J. Environ. Entomol. 2:960-961.

Shore, J. 1974. Crack and crevice treatment. Pest Control 42(7):24-27.

Slater, A.J., L. McIntosh, R.B. Coleman and M. Hurlbert. 1979. German cockroach management in student housing. J. Environ. Health. 42:21-24.

Southwood, T.R.E. 1978. Ecological Methods, with particular reference to the study of insect populations. second ed. John Wiley and Sons, N.Y. 524 p.

Suto, C. and N. Kumada. 1981. Secretion of dispersion-inducing substance by the German cockroach, *Blattella germanica* (L.) (Orthoptera:Blattellidae). Appl. Entomol. Zool. 16:113-120.

Syverton, J.R., R.G. Fisher, S.A. Smith, R.P Dow and H.F. Schoof. 1952. The cockroach as a natural extrahuman source of the poliomyelitis virus. Fed. Am. Soc. Exp. Biol. 11:483.

Walker, T.J.and S.A. Wineriter. 1981. Marking techniques for recognizing individual insects. Fla. Entomol. 64:18-209.

Waller, E.J. 1965. Control of *Blattella germanica* in a public housing project. Public Health Rep. 80:183-186.

Wood, F.E. 1980. Cockroach control in public housing. Pest Control 48(6):14-16,18.

Wood, F.E., W.H Robinson, S.K. Kraft and P.A.Zungoli. 1981. Survey of attitudes and knowledge of public housing residents towards cockroaches. Bull. Entomol. Soc. Am. 27:9-13.

Woodruff, L.C. 1938. Observations on roach reproduction. J. Kansas Entomol. Soc. 11:94-96.

Woodruff, L.C. 1939. Linear growth ratios for *Blattella germanica* (L.). J. Exp. Zool. 81:287-298.

Wright, C.G. 1965. Identification and occurrence of cockroaches in dwellings and business establishments in North Carolina. J. Econ. Entomol. 58:1032-1033.

Wright, G.C. 1979. Survey confirms correlation between sanitation and cockroach populations. Pest Control 47(9):28.

Wright, C.G. and H.C. McDaniel. 1969. Abundance and habitat of five species of cockroaches on a permanent military base. J. Econ. Entomol. 62:277-278.

Wright, C.G. and H.C. McDaniel. 1973. Further evaluation of the abundance and habitat of five species of cockroaches on a military base. Fla. Entomol. 56:252-254.

Wright, C. G. and R.C. Hillman. 1975. Efficiacy of Dowco 214 and Orthene in control of German cockroaches. J. Geo. Entomol. Soc. 10:42-49.

The vita has been removed from the scanned document

Harborage Limitation and Habitat Isolation

For German Cockroach Control

By

Bobby R. Farmer Jr.

(ABSTRACT)

This research concerns the effects that harborage limitation and habitat isolation have on German cockroach control in urban housing apartments. Standard Mason jar traps were used to survey cockroach populations, trap cockroaches for marking and population census, and detect cockroaches that moved from the original capture sites. Focus apartments (ie. apartments with large cockroach populations) were located and used for the two studies. Five focus apartments were used for the harborage limitation study. All harborage and harborage access in the kitchen and bathroom areas were sealed in three treatment apartments. These areas were not sealed in the two control apartments. Eight focus apartments were used for the habitat isolation study. Three treatment apartments had all accessways (holes and cracks) between the focus and the adjacent apartments sealed. Five control apartments were not sealed. Cockroaches in the three treatment apartments were

captured, marked and released at the point of capture. Harborage limitation focus apartments were sprayed with 0.5% chlorpyrifos in water and habitat isolation focus apartments were sprayed with a 0.25% synergized pyrethrin aerosol. Percentage control for the harborage limitation study was determined and no significant differences ($P<0.1\%$) between treatment and control apartments were found. Percentage movement for the habitat isolation study was determined and no significant differences ($P<0.1\%$) between treatments and controls were noted. Neither harborage limitation nor habitat isolation would be recommended as a cockroach control technique unless they are used in concert with other control techniques.