SOME OF THE FACTORS AFFECTING THE OPERATION OF A SCREW CONVEYOR TYPE MIXER

by

Guido John Coli

A Thesis Submitted for Partial

Fulfillment for the Degree of

MASTER OF SCIENCE

IN

CHEMICAL ENGINEERING

Approved:

_____

In Charge of Major Work

_____

Head of Chemical Engineering Department

_____

Dean of the Engineering School

_____

Director of Graduate Study

Virginia Polytechnic Institute

Blacksburg, Virginia

May, 1942

TABLE OF CONTENTS

		Page
I.	INTRODUCTION	1
II.	REVIEW OF LITERATURE	
	A. History of Mixing	2
	B. Mixing Equipment in Use	4
	C. A New Type Mixer	8
III.	EXPERIMENTAL	
	A. Purpose of Study	11
	B. Plan of Investigation	11
	C. Materials Used	13
	D. Apparatus	15
	E. Methods of Procedure	18
	F. Preliminary Investigations	19
	G. Experimental Data	26
	H. Results	64
	I. Derivation of Mixing Equations	75
IV.	DISCUSSION OF RESULTS	79
V.	CONCLUSIONS	84
VI.	SUMMARY	86
VII.	RECOMMENDATIONS	88
VIII.	BIBLIOGRAPHY	89
IX.	ACKNOWLEDGMENTS	92

TABLE OF FIGURES

Page

Figure A - Continuous Screw Conveyor Type Mixer..... 17

Figure B - Cross Section of Screw Conveyor Element..... 19

Figure C - Curves for Variation of Mixing Efficiency with..... 25

A. Difference in Crystalline Structure

B. Difference in Density

TABLE OF CURVES

Page

Curve No. 1 - Curves for Variation of Mixing Efficiency with Speed of Elements 66

Curve No. 2 - Curves for Variation of Mixing Efficiency with Feed Rate - Element Speed 56 rpm..... 67

Curve No. 3 - Curves for Variation of Mixing Efficiency with Feed Rate - Element Speed 108 rpm..... 68

Curve No. 4 - Curves for Variation of Mixing Efficiency with Feed Proportions - Element Speed 56 rpm..... 69

Curve No. 5 - Curves for Variation of Mixing Efficiency with Feed Proportions - Element Speed 108 rpm..... 70

Curve No. 6 - Curves for Variation of Mixing Efficiency with Particle Size - Element Speed 56 rpm..... 71

Curve No. 7 - Curves for Variations of Mixing Efficiency with Particle Size - Element Speed 108 rpm..... 72

Curve No. 8 - Curves for Variation of Mixing Efficiency with Difference in Density - Element Speed 56 rpm..... 73

Curve No. 9 - Curves for Variation of Mixing Efficiency with Difference in Density - Element Speed 108 rpm..... 74

I. INTRODUCTION

Mixing is a unit operation which is probably used more universally than any other, and yet it is doubtless the least scientifically developed. The fundamental object of mixing is essentially the same; viz, "In all cases, two or more materials existing either separately or in an unevenly mixed condition are, by mixing, to be put into such a condition that each particle of any material lies as nearly adjacent as possible to a particle of each of the other materials."(16)

The variety of substances to be mixed is infinite as are the conditions of mixing varied. As a consequence, there has been no standardization in mixing technique or equipment and the art has remained empirical. This is true of all types of mixing whether it be gases, liquids, solids or combinations of these.

The lack of fundamental principles in mixing is particularly noticeable in the case of solid-solid mixing because of the scarcity of research data on this type. Despite this, solid-solid mixing is utilized commercially in mixing ammonium nitrate and aluminum powder, Bakelite plastic and asbestos, and soy bean meal and resin, to mention a few of the more common ones. In these cases, as in others, each industry has attempted to develop a mixer to suit its particular needs, principally by the trial and error method.

The object of this investigation is to obtain data and evaluate factors such as relative shape, size, and density of particles, speed of mixing elements, feed rate, and proportions of feed mix in the operation of an experimental screw type conveyor mixer.

II. REVIEW OF THE LITERATURE

A. History of Mixing

Early man first learned to mix in the period from prehistoric times to 500 B.C. when he mixed clays, sand, and mud to block up chinks in the stones in his cave. Later in this period the use of pottery and the substitution of animal for manpower brought about the development of the first mixing machines using rotary action. These introduced the rotary sweep or paddle, and later mullers with large heavy wooden wheels to do the mixing.

In the period following, from 500 B.C. to 1600 A.D., no significant advances in the art of mixing were made. However, the predecessor of today's gear reducers was being used at this time.

The rotary paddle mixer was developed in the period from 1600 A.D. to 1890 A.D. From an early crude type with one or more horizontal blades, it developed into later forms with improvements such as: (1) substitution of vertical blades for horizontal; (2) the combination of both with diagonals to make so called gate mixers; (3) the placing of stationary fingers between the blades to promote turbulence; (4) the bending of the blades to fit more closely the curved walls of containers; and (5) the ''angling'' of blades to initiate currents at an angle to the path of the blades. The principle of the screw in mixing was also being developed in this period.

Developments in the modern period from 1890 A.D. until the present are comparatively insignificant. No major fundamental improvements have as yet been made on any mixers in use before 1890. The only essentially new

developments in the past 45 years are:

1. The propeller mixer: These mixers furnish a compact means for mixing in a wide variety of cases. They make use of high-speed propellers of exactly the same type as are used in ship propulsion. The effect of such variables as size of propeller with respect to the tank, pitch of the propeller and r.p.m. of the propeller in the tank has never been worked out experimentally. As a result, no general rule can be given for the most effective method of utilizing such propellers.(1)

2. The turbine mixer for liquid mixing: The turbine mixer may be most easily pictured as one or more centrifugal pumps working in a tank against practically no back pressure. Material enters the impeller axially through a central opening, is accelerated by the vanes and is discharged tangentially at a relatively high velocity. The turbine mixer requires only one-thirtieth that required by an outside circulating centrifugal pump delivering the same volume of liquid. Turbine mixers are especially useful for mixing viscous liquids or heavy slurries, for suspending heavy solids, for rapid dissolving, for good dispersions, and for mixing in irregularly shaped containers.(16)

3. The colloid mill: Most colloid mills are the same in principle and are used where fine dispersions are required. The materials are fed in the machine between a very rapidly revolving solid rotor and its casing, which it clears by 0.001 inch or less. This rotor may or may not be grooved and it is often conical in shape. Dispersion is accomplished by subjecting the material to intense shear and centrifugal force. Before material can be used in this mill, it must be premixed and the coarser dispersion reduced. Colloid mills have the advantage of giving continuous flow, but the disad-

vantage of a high first cost, high power requirements, low throughput, and a heating effect on the material. On some types of work where the maximum degree of dispersion is required, nothing else has replaced them.(16)

4. The homogenizer: The homogenizer may be best described as a positive high-pressure pump in which the pressure is released past a disk or valve. This valve is held tightly pressed against the end of the discharge pipe by spring tension. Best results have been obtained when two such valves were used in series. The homogenizer is used for breaking up the butter fat in ice-cream mixes, evaporated milk, and other food products, and for the manufacture of emulsions.

B. Mixing Equipment in Use

The Chemical Engineers' Handbook(16) recommends the following mixers for each of the different types of mixing operation encountered:

1. Mixing Gases with Gases: This is not generally considered a difficult operation and a mixer of the jet, injector, propeller, or turbine type may be used.
2. Mixing Liquids with Liquids: The conditions met in this type of mixing vary, but any one of the following has been found satisfactory, depending chiefly on the viscosity of the liquids to be mixed; paddle mixer, propeller mixer, turbine mixer, or a jet mixer.
3. Mixing Liquids and Gases: For mixing liquids and gases a turbo-absorber, injector, scrubber, or bubble tower has been found satisfactory.

4. Mixing Liquids and Solids: A mixer must be chosen for this case that will best mix the solid of highest gravity. Paddle, propeller, turbine, and ball mill mixers have been found suitable.

5. Mixing Solids and Solids: The problems met in mixing solids with solids depend on relative shape, gravity, and size of the particles. A tumbling barrel, rake mixer, ribbon mixer, or ball mill are used for this type mixing.

All mixers may be grouped under five primary classifications as follows:

1. Flow mixers: This type of mixer is used only in continuous or circulating systems for the thorough mixing of two miscible liquids. The liquids are pumped through the mixer and mixing is accomplished by interference with the flow.

2. Paddle or arm mixers: This type of mixer in its simplest form consists of a horizontal paddle in the bottom of a tank driven by an upright post in the center. Improvements such as ''angling'' and bending of the blades and substitution of vertical blades for horizontal have done much to increase the efficiency of this mixer. Paddle mixers are more widely used than any other type because -

   (1) They are oldest, best known, and first to be thought of.

   (2) They can often be home made.

(3) The first cost is usually low.

(4) They are entirely satisfactory on a wide variety of work.

However, where stratification may occur, as in the suspending of fairly heavy solids in light liquids or the mixing of light pastes or liquids of considerable viscosity, a paddle mixer is comparatively inefficient both as to power consumed and as to quality of results.

3. Propeller or helical mixers: As previously stated, this type mixer makes use of high-speed propellers of exactly the same type as are used in ship propulsion. These mixers, although widely used, have never realized their maximum efficiency because of a lack of experimental work on them to evaluate the effect of the variable factors involved in their use.

4. Turbine or centrifugal impeller mixers: This type of mixer has also been previously discussed and its mixing action explained.

5. Miscellaneous types: This classification includes any mixer which utilizes a mixing action other than the four types discussed. A few of the more common types in this group are:

    1. The colloid mill
    2. The homogenizer
    3. The ball mill
    4. Rake Mixer

5. Paper beater

6. Mixing rolls

7. Putty-chaser

Solid-solid mixers are classified in the above listing under propeller or helical mixers and a discussion of the more common ones follows.

Ribbon (Double Helical) Mixer: This is probably the most satisfactory type for mixing powders and is used commercially to mix ammonium nitrate and aluminum powder. The mixing element consists of two helical ribbons, one a right-hand screw and the other a left-hand screw. These move the materials back and forth in the mixer as well as vertically.(16)

Continuous Solid Mixer: In 1919 Bates and Walker(2) obtained a patent on a mixer for solids which consisted essentially of a horizontal cylinder mounted on friction wheels. The materials were fed in one end by a screw conveyor. Mixing was accomplished by rotation of both the cylinder and axial shaft, on which discs were mounted.

Triplex Dry Blender: This mixer consists of a rotating cylinder with attached helical screw flights. Mixing is accomplished by rotation of the cylinder and the action of the screw flights which are so arranged as to divide the materials into thirds by geometric progression. Low power consumption and thorough blending are the chief claims of the manufacturer for this mixer.(5)

Rotating Pan Mixer: This machine has plow-like blades, mounted with springs, which fit the bottom of the pan very closely, and stationary scrapers which help feed the blades and scrape the sides of the pan clean. It is used for mixing pastes or plastics, such as putty, and for mixing dry

powdered solids.(16)

Dough Mixer: This type mixer is used to handle thick or highly doughy, gummy, plastic masses. It has one bent arm or two arms rotating in opposite directions, usually at different speeds in a divided trough.(16)

Ball Mill: The chief function of the ball mill is grinding, but it is also used in many cases for simple mixing where no grinding is desired. The materials must be of such consistency that the motion of the balls is free since the action depends on this.(21)

Putty Chaser: This type of mixer is widely used for the manufacture of putty and other similar operations on plastic materials. It has one or more large wheels rolling around in a pan, combining a kneading and grinding action. The rollers are invariably heavy and have scrapers or knives attached to and rotating with the rollers to deflect the material into the path of the rolls.(16)

The Tumbling Barrel: This is one of the simplest, but one of the most useful types of mixers. It consists of a barrel of any desired shape mounted on a shaft and rotating with the shaft. The tumbling action produced by rotation of the barrel thoroughly mixes the contents. It is extensively used for mixing powders and for all concrete mixing.

C. A New Type Mixer

In 1939, a new type mixer, utilizing a helical conveyor as the mixing element, was constructed at Virginia Polytechnic Institute by Luther C. Peery, a graduate student in chemical engineering, under the direction of Dr. F. C. Vilbrandt, Head of the Department of Chemical Engineering of

that institute. The conveyor, enclosed in a standard iron pipe, was of the cut and folded type to give more intensive mixing action and retard the rapid flow of materials through the mixer.

The apparatus consists of four separate units mounted over each other to conserve floor space. These units are connected by chutes, provided with ports to facilitate sampling. The frame is of bolted angle iron construction which allows easy removal of members when necessary.

Standard fittings with gaskets were used with the iron pipe casing. The conveyor is tangent to the casing at the bottom which further retards passage of the materials and increases mixing efficiency. The feed is introduced to the mixer from two rectangular hoppers mounted above the top unit, each hopper having a capacity of 2-1/2 cubic feet.

All units are driven by V-belts and V-pulleys from a single 2-H.p. electric motor. The substitution of various size pulleys in this hook-up enables the speed of the mixing units to be varied, if so desired.(17)

As a result of the experimentation which he did on the mixer, Peery was able to make the following general statements:

''Mixing efficiency varies as the length of the mixer and inversely with the r.p.m. of the mixing elements, feed rate, ratio of the relative proportions of the materials, average particle diameter, and with the difference in specific gravity of the materials.''

He further proposed the following equation involving these variables:

$$E = K \frac{L}{N R Z d_{avg.} (p_1 - p_2)}$$

E = the per cent deviation from a heterogeneous mixture.

N = r.p.m. of mixing elements expressed as feet per hour peripheral speed.

R = feed rate of the materials expressed as cubic feet per hour.

Z = the ratio of the material present in the smaller quantity to the material present in the larger quantity (volume %).

$d_{avg.}$ = average particle diameter in feet.

p_1 and p_2 = respective densities of the materials expressed as pounds per cubic foot.

L = length of the mixer in feet.

K = experimental coefficient.

More terms may be added and modifications made when future investigations indicate the need for them. The effect of the shape of the particle, which is included in K, could probably be evaluated by further study.

Peery further arrived at a number of conclusions and made certain recommendations with regard to operating the mixer and these may be found in the following table:

1. The major portion of the mixing takes place in the first eight feet of mixer length traveled by the materials.
2. The mixer is more efficient at a mixing element velocity of 55 r.p.m. than at 67 or 83 r.p.m.
3. The materials should be less than four mesh.
4. The relative proportions of materials fed into the mixer affect the time required to approach a heterogeneous mixture.
5. The mixer is more efficient at low feed rates.
6. A certain amount of size reduction takes place in the mixer when brittle materials are mixed.

III. EXPERIMENTAL

A. Purpose of Study

The purpose of this study is to obtain data and evaluate factors such as relative shape, size, and density of particles, speed of mixing elements, feed rate, and proportions of feed mix in the operation of an experimental screw type conveyor mixer.

B. Plan of Investigation

A. Mixing materials with similar densities - Chert and Copper Sulfate

I. To determine the effect of speed of elements on mixing

Holding constant:

1. Density of materials	2.3
2. Particle size (mesh)	50
3. Feed rate (cu.ft./hr.)	6
4. Feed proportions	90:10

Mixing with element speeds of - 35, 54, 72, 108, and 144 rpm.

II. To determine the effect of feed rate on mixing

Holding constant:

1. Density of materials	2.3
2. Particle size (mesh)	50
3. Speed of elements (rpm)	Item A-I
4. Feed proportions	90:10

Mixing with feed rates of - 3, 6, and 12 cu.ft./hr.

III. To determine the effect of feed proportions on mixing

Holding constant:

1. Density of materials	2.3
2. Particle size (mesh)	50
3. Feed rate (cu.ft./hr.)	Item A-II
4. Speed of elements	Item A-I

Mixing with feed proportions of - 50:50, 60:40, 75:25 and 90:10

IV. To determine the effect of particle size on mixing

Holding constant:	1. Density of materials	2.3
	2. Speed of elements	Item A-I
	3. Feed rate (cu.ft./hr.)	Item A-II
	4. Feed proportions	Item A-III

Mixing with particle sizes of - 16, 20, 50, and Fines.

B. Mixing materials with different densities - barytes, andalusite, allanite, kyanite, and barium chloride

I. To determine the effect of difference in density on mixing

Holding constant:	1. Speed of elements	Item A-I
	2. Particle size (mesh)	Item A-IV
	3. Feed rate (cu.ft./hr.)	Item A-II
	4. Feed proportions	Item A-III

Mixing with densities of - 4.5 and 2.3, 3.7 and 2.3, 3.0 and 2.3, and 2.3 and 2.3

II. To determine the effect of different crystalline structure on mixing

Holding constant:	1. Speed of elements	Item A-I
	2. Particle size	Item A-II
	3. Feed rate	Item A-III
	4. Feed proportions	Item A-IV

Mixing materials of the following crystalline structures - ortho and ortho, ortho and mono, hexa and isomet, hexa and mono

C. Correlation and application of data to mixing equation.

Item: Variable factors indicated in this manner will be set after completion of tests in designated section of plan of investigation.

x x x

The following is the more general plan followed in conducting the investigation:

1. Overhaul the mixer and feed hoppers and make whatever adjustments are necessary to operate the unit.

2. Secure materials and additional equipment needed from proper sources.
3. Make preliminary tests with conveyor elements cut and folded. Straighten folds of conveyor elements and make further tests to determine more satisfactory condition of the two.
4. Test mixer by using several materials, sampling instantaneously at four sampling ports and analyzing materials so collected. Vary the following: speed of mixer elements, feed rate, proportions of feed mixture, particle size, shape, and density.
5. Discuss and evaluate the effect of variable factors on results obtained.

C. Materials Used

A. For tests with materials of similar densities.

Copper Sulfate. -- Formula $CuSO_4 \cdot 5H_2O$. This material, trade name blue stone, was obtained from the Christiansburg Fuel and Supply Company, Christiansburg, Virginia, at a cost of $0.08 per pound. The material had a specific gravity of 2.30, a triclinic crystalline structure, and showed the following sieve analysis: (U. S. Standard Sieve Series)

Sample 100 grams Shaking time 3 min.

16 mesh	24.7 %
20	16.6
50	40.6
60	6.8
80	5.6
100	1.9
200	3.2
Fines	0.7
	100.1

The portion of this material used in experimental work and classified as fines was 55.1 per cent + 100 mesh and 44.9 per cent - 100 mesh. The copper sulfate is readily soluble in hot or cold water.

Chert. -- This siliceous rock is an impure flint, occurring chiefly in limestones. It has the general formula $SiO_2 \cdot H_2O$ and tends to have a triclinic fracture. It was obtained from deposits found approximately half a mile off Route No. 8 on the Mountain Lake Road near Newport, Virginia. The material was crushed and sieved to obtain the desired particle sizes for experimentation purposes. The portion used in experimental work and referred to as fines was 49.2 per cent + 100 mesh and 50.8 per cent - 100 mesh when classified on U. S. Standard Sieve Series screens. The chert was found to have an average specific gravity of 2.36.

Porcelain Grinding Balls. -- Thirty pounds of these balls were obtained from the Ravenna Ceramics Corporation, Ravenna, Ohio, at a cost of ten cents per pound. These ceramic spheres had a size range of 3/8-inch to 7/16-inch and a specific gravity of 2.42.

B. For tests with materials of different densities.

Barytes. -- This material has the general formula $BaSO_4$, an orthorhombic crystalline structure, and a specific gravity of 4.5. It was obtained from Tazewell County, Virginia, in lump form and crushed to the desired particle sizes for use in the tests.

Kyanite. -- The source of this material was the Burnsville, North Carolina, plant of Mas-Celo Mines, Incorporated. Twenty-five pounds of 100 per cent - 48 mesh and 100 per cent + 80 mesh kyanite concentrate were received from the company gratis for experimentation purposes. The kyanite

has a triclinic structure and was found to have a specific gravity of 3.09. Its formula is $Al_2O_3 \cdot SiO_2$.

Barium Chloride. -- The formula of this material is $BaCl_2 \cdot 2H_2O$, and it was purchased from Phipps and Bird, Incorporated, Richmond, Virginia, at a cost of $0.57 per pound. It has a monoclinic crystalline structure and a specific gravity of 3.09. The salt was sized on U. S. Standard Sieve Series screens and the desired particle sizes obtained.

Andalusite. -- Thirty pounds of this material were obtained free of charge from the Champion Spark Plug Company, Ceramic Division, Detroit, Michigan. The formula of the mineral is $Al_2O_3 \cdot SiO_2$ and its crystalline structure is orthorhombic. The specific gravity was found to be 3.09. The andalusite as received was in lump form and, therefore, had to be crushed and sieved to obtain the desired particle sizes.

D. Apparatus

Conveyor Mixer. -- The mixer, illustrated in Figure A on Page 17, utilizes a four-inch helical conveyor enclosed in a five-inch standard iron pipe (I) as the mixing element. The conveyor was of the cut and folded type to give more intensive mixing action and retard the rapid flow of materials through the mixer. The apparatus consists of four units (I) mounted over each other to conserve floor space. These units are connected by chutes (A), provided with ports (M) to facilitate sampling. The frame (G) is of bolted angle iron construction which allows easy removal of members when necessary. Standard fittings (F) with gaskets were used with the iron pipe casing. The conveyor is tangent to the casing at the bottom which further retards passage

of the materials and increases mixing efficiency.

Feed. -- The feed is introduced to the mixer from two rectangular hoppers mounted above the top unit, each hopper having a capacity of 2-1/2 cubic feet. These hoppers have variable size discharge openings and any desired feed rate may be obtained by trial.

Drive. -- All units are driven by V-belts and V-pulleys from a single 2-H.p. electric motor (K). The substitution of various size pulleys in this hook-up enables the speed of the mixing units to be varied.

Samplers. -- The long handled sampling cans were simply half cans of slightly less diameter than the inside diameter of the mixer pipe. These cans completely blocked passage of any material if lowered into the sampling ports (M). Long handles were attached to the cans for holding them in place when sampling.

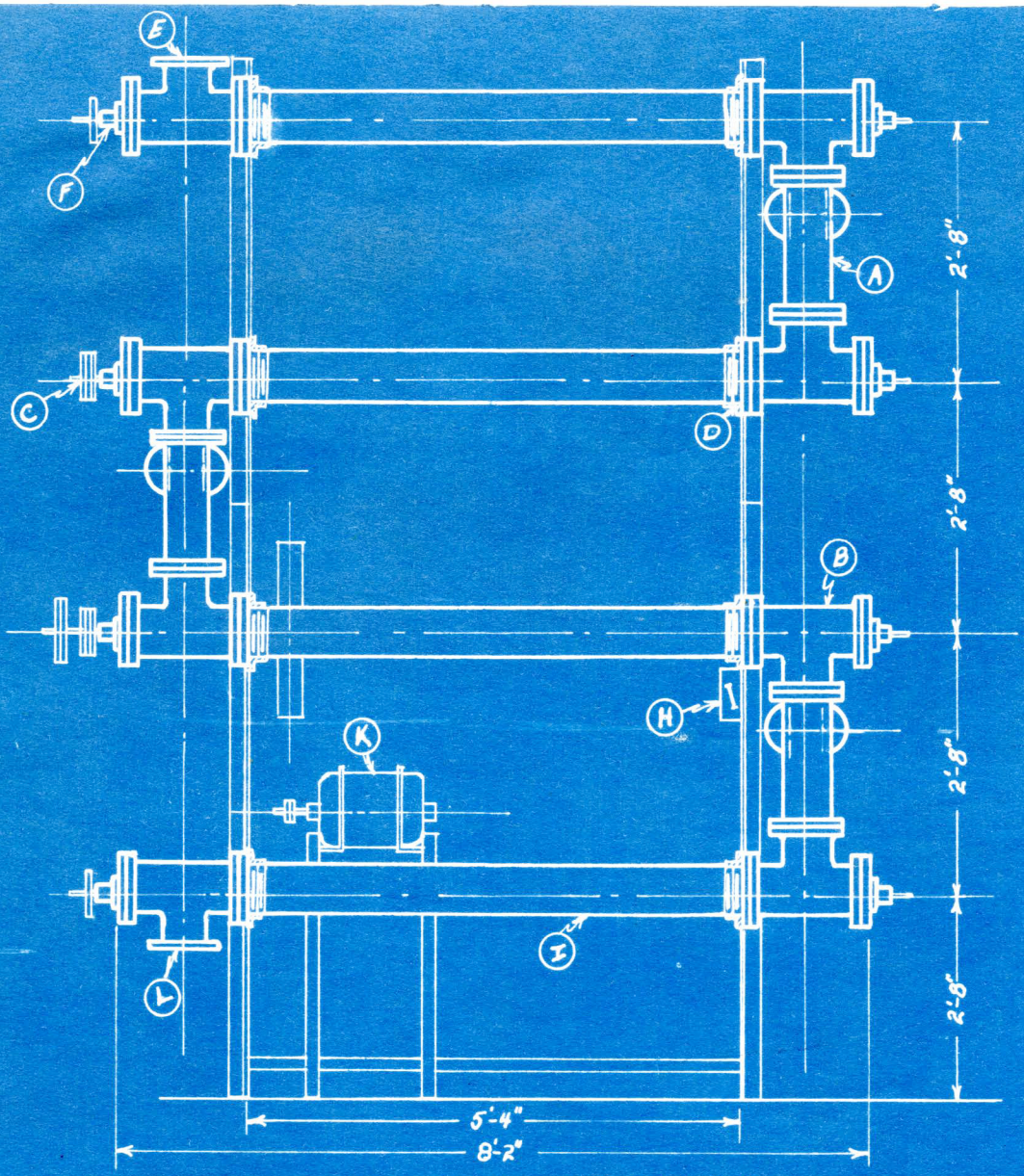

SECTION A-A (REAR VIEW)

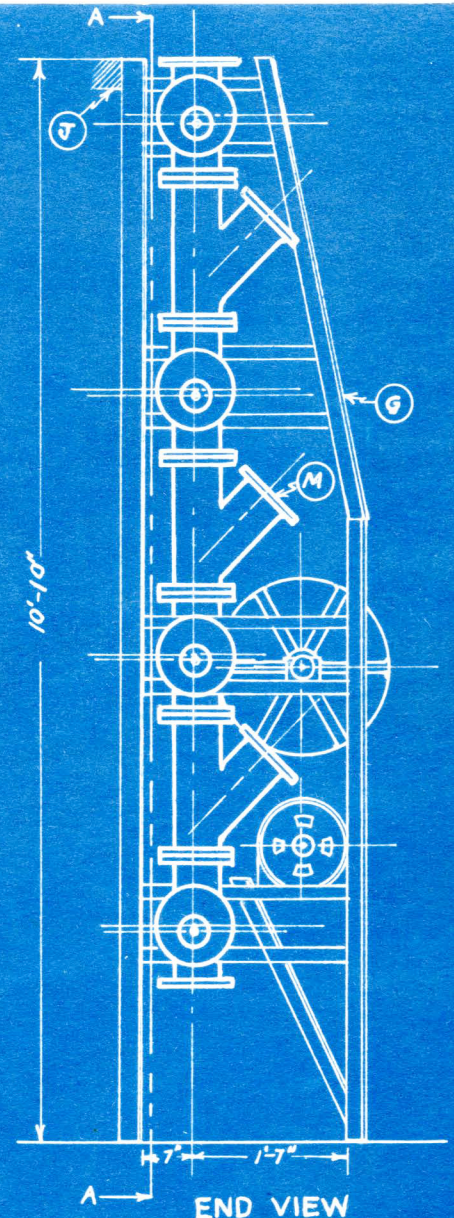

END VIEW

LEGEND

A- C.I. 45° LATERALS 5"
B- C.I. DOUBLE SWEEP TEE 5"
C- 1"D x 7" COLD ROLLED STEEL DRIVE SHAFT
D- C.I. SCREW FLANGE, 5"
E- FEED OPENING
F- BABBITTED FLANGED BEARING
G- FRAME OF 2"x2" ANGLE IRON
H- STARTING BOX
I- STD 5" PIPE CONTAINING 4" SCREW CONVEYOR UNITS
J- FRAME BOLTED TO 8"-I BEAM
K- 2 H.P. 220 VOLT AC MOTOR
L- DISCHARGE OPENING
M- SAMPLING PORTS

REVISIONS

DEPARTMENT OF CHEMICAL ENGINEERING
VIRGINIA POLYTECHNIC INSTITUTE, BLACKSBURG, VA

CONTINUOUS SCREW CONVEYOR TYPE MIXER

DRAWN BY: G.J. Coli
TRACED BY: M. SPENCER
APPROVED BY:

SCALE:- 1"-2'
DRAWING NO. 1
MARCH 20, 1942

E. Methods of Procedure

Conditions During Run. -- The conditions for the feed and mixer were set prior to any given run. These include: particle size, feed rate, material densities and crystalline structures, feed proportions and speed of mixer elements. The feed hoppers have variable size discharge openings and any desired feed rate may be obtained by trial. A number of different size pulleys allow a wide range of obtainable mixer element speeds. The remaining variables are properties of the materials themselves and are set by proper choice according to conditions desired.

Sampling. -- When these preparations were completed, instantaneous samples were taken at the sampling ports (M) and discharge opening (L) during the run. The mixer was started by throwing switch (H) and the feed introduced at the feed opening (E). At given time intervals samples of 1 to 2 pounds of material were taken simultaneously at each sampling port with the long handled sampling cans. These samples were labeled in the order in which they were taken during the run. Sampling was continued until the material passing a port was insufficient to obtain 1 to 2 pounds of material in the time required to obtain previous samples. Feed time and the time for the material to pass through the mixer were recorded at the end of the run. The total weight of samples and the weight of material collected at the discharge port were taken and the difference in the sum of these two weights and the weight of the feed is the amount retained in the system.

Analysis of Samples. -- In all the tests conducted one of the two materials being mixed was always water soluble. This, therefore, formed the basis for sample analysis in determining the mixing efficiency. The labeled

samples were then quartered twice and a 25-gram sample taken from each. These samples were leached at least three times with 100 cc. of hot water which was approximately six times the required amount of water. They were then carefully decanted and dried in an atmospheric dryer for one hour at 200° F. The weight of dry material divided by the weight of sample gave the per cent of insoluble material that was present in the sample.

Recovery of Copper Sulfate. -- The copper sulfate present in the remaining mixture was also leached and recovered by crystallization from an evaporated solution. The chert was sieved after every second or third run to remove any fine material resulting from crushing occurring in the mixer. This amount was small and additional chert was added to make up the required weight.

F. Preliminary Investigations

A. To determine the maximum size of material to be used in the mixer, and the condition of the conveyor elements; whether cut or folded or straightened.

One of the constructional features of the conveyor mixer is the use of four-inch conveyor elements in five-inch pipe. While the flow back of material resulting from this clearance is the principal source of mixing action within the mixer, as illustrated in figure below, this clearance is also the cause of the size reduction which takes place. The crushing action is the result of the material's becoming wedged between the edge of the element and the pipe wall as the element rotates.

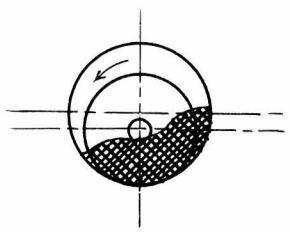

Fig. B Cross Section of Screw Conveyor Element

Peery[17] recommends that material size not exceed 4 mesh. One -quarter inch porcelain grinding balls which are slightly larger than this size were available so tests were made using them. Four runs were attempted at 35 rpm to observe the general operation of the mixer with the following results:

Feed rates -- 10 pounds used.

5 cu. ft./hr.	Machine completely stalled within 10 seconds after introduction of feed.
3 cu. ft./hr.	Machine stalled within 30 seconds after introduction of feed.
1.5 cu. ft./hr.	Machine stalled 10 times during feeding, completely stalled after approximately 3 minutes of operation. No balls observed passing from first to second unit.
1 cu. ft./hr.	First ball required 10 to 12 minutes to travel completely through four units of mixer.

In every case where the mixer completely stalled, it was necessary to open the unit, remove the conveyor element, and clean out the balls before the unit would operate satisfactorily again. At least 20 per cent of the total weight of balls present in the unit were found to be crushed, which, in view of the hardness of the grinding balls, would indicate that considerable force had been exerted on the material.

Variation in Particle Size. -- At one cubic foot per hour, the balls were not tumbled, but simply conveyed along the bottom of the pipe. This accounts for the fact that comparatively little crushing action took place during this run. These tests indicate that the mixing action was at a minimum at the low feed rate necessary to use four mesh material. There-

fore, it was decided to abandon the use of materials larger than 16-mesh. When chert of 16-mesh size was used as feed in the mixer, there was a comparatively slight amount of crushing action noticeable. In no case did the mixer show any tendency to stall with feed rates as high as 12 cubic feet per hour.

Condition of Conveyor Elements. -- The cut and folded type elements subjected the materials to such intensive mixing action that all of the mixing was taking place in the first unit. Further, the flow of the material was retarded to such an extent that two to three minutes were required for the chert to traverse the first unit. Samples, taken during two trial runs with 16-mesh chert, showed the same composition by weight at the end of the first unit as those taken at the discharge opening. This indicates that the maximum amount of mixing possible had taken place in the first unit. The objection to this condition is the fact that the construction of the units makes it impossible to sample along the length of each unit. As a consequence, mixing curves taken from data obtained under these conditions would show little of the mixing characteristics of the conveyor mixer. Straightening these folds greatly decreased the mixing action in each unit and at the same time increased the rate of flow of material through the mixer. The effect of this was to spread the mixing action over a greater length of the mixer and give a better picture of the operation of the unit.

B. To determine relative importance of a difference in the density of the materials when compared to a difference in the crystalline structure of the materials as to the effect on mixing.

Purpose of Tests. -- The original plan of investigation included runs on materials of the same density, but of different crystalline structure,

and runs in which these two variables were reversed. When these runs were to be made, it was found that sufficient quantities of materials suitable for the tests were not available. It was impossible, using the materials on hand, to vary one factor without varying the other. Therefore, the purpose of these tests was to determine which of these two variables has the greater effect on mixing as shown by poorer efficiency or more irregular data for one variable than the other.

Apparatus and Materials. -- A small cylinder, 3-1/2-inches in diameter and 9 inches long, was fitted with twin baffles, 180 degrees apart. This was used as a mixing chamber and rotated at a constant speed of 10 rpm. The three materials used in the tests were kyanite, copper sulfate, and barium chloride. Kyanite is the only one of the three that is not water soluble. One hundred grams of each material, when shaken for three minutes on United States Standard Sieve Series 60, 80 and 100 screens, gave the following analysis:

	Percent	Mesh Size
Copper Sulfate:	21.2	+ 60
	24.7	+ 80
	9.1	+ 100
	44.9	Fines
	99.9	
Kyanite:	16.4	+ 60
	28.5	+ 80
	5.8	+ 100
	48.2	Fines
	99.9	
Barium Chloride:	21.9	+ 60
	28.4	+ 80
	19.0	+ 100
	30.5	Fines
	99.8	

The materials were grouped in this order:

A. Test with difference in crystalline structure as variable.

Material	Specific Gravity	Structure	Weight Used
Kyanite	3.09	Triclinic	75 grams
Barium Chloride	3.09	Monoclinic	25 grams

B. Test with difference in density as variable.

Material	Specific Gravity	Structure	Weight Used
Kyanite	3.09	Triclinic	75 grams
Copper Sulfate	2.30	Triclinic	25 grams

Procedure. -- Both materials were placed in the cylinder in the same order and position in each run. The cylinder was rotated and at the times designated in the data samples were withdrawn. These were taken from the same three positions each time; a sample from either end and one from the center of the cylinder. The three were placed together on a sheet of paper with the least amount of agitation possible. The material was then quartered and a sample consisting of approximately fifty per cent of the total weight of three withdrawn. This was repeated six times for each run. The six samples were then leached at least three times with 100 cc. of hot water, carefully decanted, and dried in an oven at 160° F. for one hour. The weight of dry solid divided by the weight of the original sample gave the per cent of insoluble material present in the sample.

A graph, Figure C on page 25, was drawn to show the results of the two runs. Time of rotation was plotted as the abscissa against per cent deviation from a perfect heterogeneous mixture as the ordinate. The ordinate values are simply the difference between the weight per cent of the insoluble material present in each sample and the per cent present in the material placed in the cylinder at the start of the run.

It is evident from the graph that the curve for the run with a difference in density as the variable is much the more irregular of the two. On this basis, tests made on the screw conveyor mixer with the available materials were titled as studies of the effect of a difference in density on mixing. This means that variations in mixing where both factors are varied may be attributed more to the effect of the difference in density than the difference in crystalline structure of the materials.

DATA

I. Effect of difference in crystalline structure on mixing.

Sample No.	Weight gms.	Quartered Sample gms.	Time sec.	Per cent Kyanite
1	13	5.55	30	75.86
2	12	5.55	60	75.86
3	15	5.55	120	75.32
4	13	5.55	210	76.56
5	11	5.55	330	75.67
6	13	5.55	510	75.86

II. Effect of difference in density on mixing.

Sample No.	Weight gms.	Quartered Sample gms.	Time sec.	Per cent Kyanite
1	15	5.55	30	75.50
2	12	5.55	60	73.87
3	11	5.55	120	71.17
4	11	5.55	210	74.77
5	10	5.55	330	74.77
6	10	5.55	510	78.92

Plate I

Curves for Variation of Mixing Efficiency with

A. Difference in Crystalline Structure

B. Difference in Density

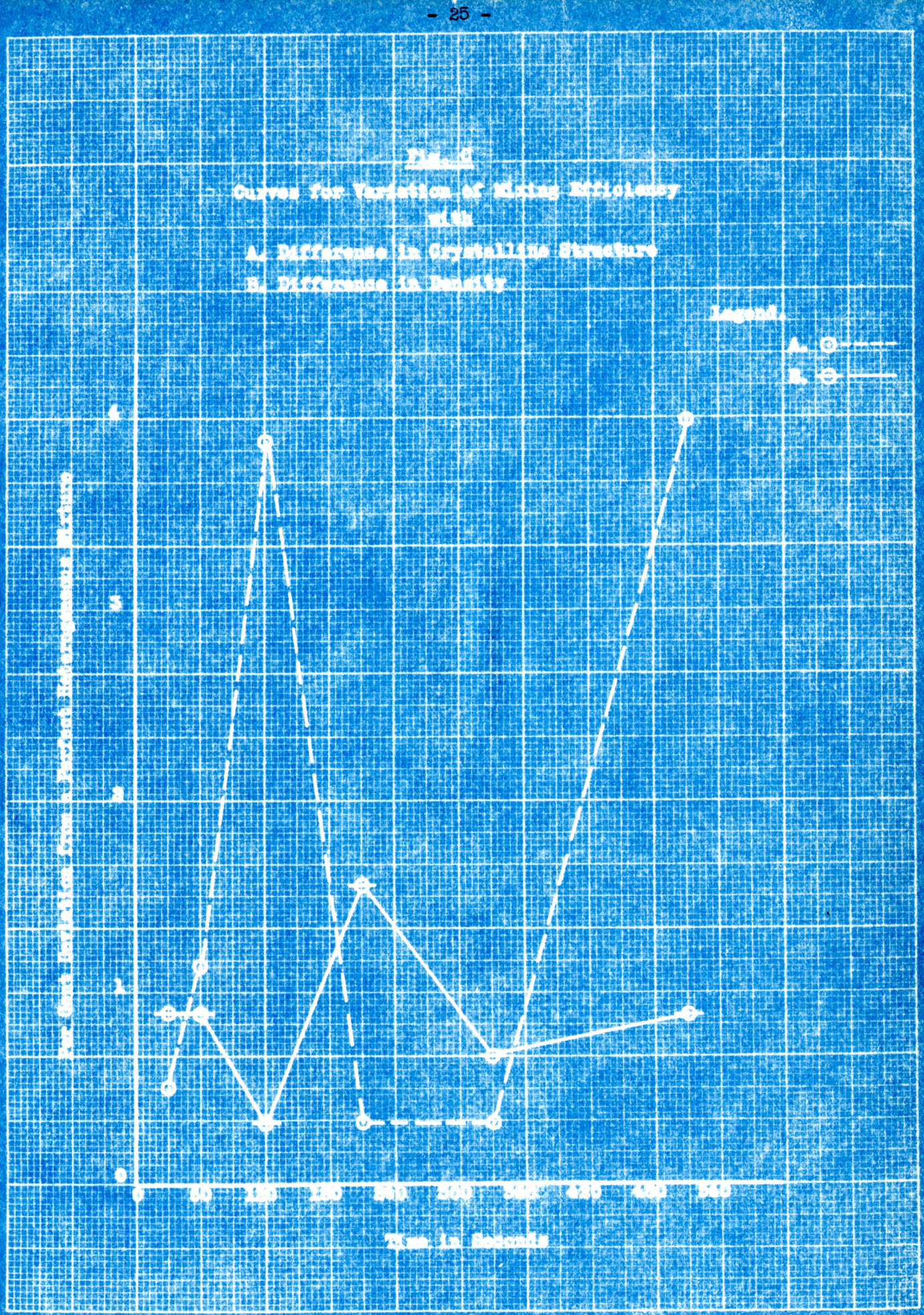

G. Experimental Data

The experimental data includes the test made to determine the effect of each of the variable factors on mixing efficiency. The information for each run made was recorded on an individual data sheet.

Effect of Speed of Mixer Elements on Mixing. -- The following five tables (pages 27 to 32) show the results of the runs made at 40, 56, 72, 108, and 144 rpm. All other factors were held constant and the materials used in each run were chert and copper sulfate.

DATA SHEET FOR SCREW CONVEYOR TYPE MIXER

Test No. I-1 Date 2/19/42

Materials:

	1 Chert	2 Copper Sulfate
Density (lb./cu.ft.)	147.3	143.5
Particle Size (mesh)	50	50
Feed Rate (cu.ft./hr.)	5.44	0.60
Weight Charged (lb.)	18	2
Percent Total Weight	90	10

RPM of Mixer Elements 40 Total Feed Rate 6.04 cu.ft./hr.

Avg. Time Between Samples 30 sec. Retained in system 1.5 lb.

Approximate Time of Run 2 P.M.

SAMPLE ANALYSIS

Time Min.	Sample No.	Weight gm.	1 %	2 %	Time Min.	Sample No.	Weight gm.	1 %	2 %
1:00	A-1	25	86.5	13.5	2:00	B-1	25	81.7	18.3
1:30	-2	25	87.3	12.7	2:30	-2	25	88.8	11.2
2:00	-3	25	87.6	12.4	3:00	-3	25	89.6	10.4
2:30	-4	25	78.0	22.0	3:30	-4	25	89.2	10.8
	-5					-5			
	Avg.	25	84.7	15.3		Avg.	25	86.1	13.9
Time Min.	Sample No.	Weight gm.	1 %	2 %	Time Min.	Sample No.	Weight gm.	1 %	2 %
3:00	C-1	25	86.4	13.6	4:00	D-1	25	84.8	15.2
3:30	-2	25	89.2	10.8	4:30	-2	25	87.2	12.8
4:00	-3	25	86.5	13.5	5:00	-3	25	89.6	10.4
4:30	-4	25	83.2	16.8	5:30	-4	25	89.2	10.8
	-5					-5			
	Avg.	25	87.2	12.8		Avg.	25	87.7	12.3

Elapsed Feed Time - 1:21 min. Elapsed Time of Run - 6:10 min.

Average Deviation from a Heterogeneous Mixture

A- 5.3 % B- 3.9 % C- 2.8 % D- 2.3 %

DATA SHEET FOR SCREW CONVEYOR TYPE MIXER

Test No. I-2 Date 2/20/42

Materials:

	1	2
	Chert	Copper Sulfate
Density (lb./cu.ft.)	147.3	143.5
Particle Size (mesh)	50	50
Feed Rate (cu.ft./hr.)	5.44	0.60
Weight Charged (lb.)	18	2
Percent Total Weight	90	10

RPM of Mixer Elements 56 Total Feed Rate 6.04 cu.ft./hr.

Avg. Time Between Samples 30 sec. Retained in system 1.25 lb.

Approximate Time of Run 2 P.M.

SAMPLE ANALYSIS

Time Min.	Sample No.	Weight gm.	1 %	2 %	Time Min.	Sample No.	Weight gm.	1 %	2 %
0:30	A-1	25	84.4	15.6	1:00	B-1	25	84.8	15.2
1:00	-2	25	89.3	10.7	1:30	-2	25	88.4	11.6
1:30	-3	25	88.8	11.2	2:00	-3	25	89.3	10.7
2:00	-4	25	83.3	16.7	2:30	-4	25	83.6	16.4
	-5					-5			
	Avg.	25	86.4	13.6		Avg.	25	87.5	12.5
Time Min.	Sample No.	Weight gm.	1 %	2 %	Time Min.	Sample No.	Weight gm.	1 %	2 %
2:00	C-1	25	82.8	17.2	3:00	D-1	25	87.2	12.8
2:30	-2	25	88.4	11.6	3:30	-2	25	89.3	10.7
3:00	-3	25	88.4	11.6	4:00	-3	25	89.3	10.7
3:30	-4	25	89.5	10.5	4:30	-4	25	88.8	11.2
	-5					-5			
	Avg.	25	88.3	11.7		Avg.	25	88.6	11.4

Elapsed Feed Time - 1:21 min. Elapsed Time of Run - 4:45 min.

Average Deviation from a Heterogeneous Mixture

A- 3.6 % B- 2.5 % C- 1.7 % D- 1.4 %

DATA SHEET FOR SCREW CONVEYOR TYPE MIXER

Test No. I-3 Date 2/20/42

Materials:

	1	2
	Chert	Copper Sulfate
Density (lb./cu.ft.)	147.3	143.5
Particle Size (mesh)	50	50
Feed Rate (cu.ft./hr.)	5.44	0.60
Weight Charged (lb.)	13	2
Percent Total Weight	90	10

RPM of Mixer Elements 72 Total Feed Rate 6.04 cu.ft./hr.

Avg. Time Between Samples 20 sec. Retained in system 1.00 lb.

Approximate Time of Run 5 P.M.

SAMPLE ANALYSIS

Time Min.	Sample No.	Weight gm.	1 %	2 %	Time Min.	Sample No.	Weight gm.	1 %	2 %
0:40	A-1	25	87.6	12.4	1:00	B-1	25	86.8	13.2
1:00	-2	25	86.0	14.0	1:20	-2	25	87.0	13.0
1:20	-3	25	85.2	14.8	1:40	-3	25	86.8	13.2
1:40	-4	25	82.8	17.2	2:00	-4	25	86.8	13.2
	-5					-5			
	Avg.	25	85.4	14.6		Avg.	25	86.8	13.2
Time Min.	Sample No.	Weight gm.	1 %	2 %	Time Min.	Sample No.	Weight gm.	1 %	2 %
1:40	C-1	25	86.8	13.2	2:20	D-1	25	86.4	13.6
2:00	-2	25	86.8	13.2	2:40	-2	25	86.4	13.6
2:20	-3	25	86.8	13.2	3:00	-3	25	86.8	13.2
2:40	-4	25	86.8	13.2	3:20	-4	25	87.6	12.4
	-5					-5			
	Avg.	25	86.8	13.2		Avg.	25	86.8	13.2

Elapsed Feed Time - 1:21 min. Elapsed Time of Run - 3:30 min.

Average Deviation from a Heterogeneous Mixture

A- 4.6 % B- 3.2 % C- 3.2 % D- 3.2 %

DATA SHEET FOR SCREW CONVEYOR TYPE MIXER

Test No. I-4 Date 2/23/42

Materials:

	1	2
	Chert	Copper Sulfate
Density (lb./cu.ft.)	147.3	143.5
Particle Size (mesh)	50	50
Feed Rate (cu.ft./hr.)	5.44	0.60
Weight Charged (lb.)	18	2
Percent Total Weight	90	10

RPM of Mixer Elements 108 Total Feed Rate 6.04 cu.ft./hr.

Avg. Time Between Samples 20 sec. Retained in system 1.00 lb.

Approximate Time of Run 2 P.M.

SAMPLE ANALYSIS

Time Min.	Sample No.	Weight gm.	1 %	2 %	Time Min.	Sample No.	Weight gm.	1 %	2 %
0:20	A-1	25	85.2	14.8	0:40	B-1	25	85.6	14.4
0:40	-2	25	87.2	12.8	1:00	-2	25	86.8	13.2
1:00	-3	25	88.4	11.6	1:20	-3	25	87.2	12.8
1:20	-4	25	86.4	13.6	1:40	-4	25	88.0	12.0
	-5					-5			
	Avg.	25	86.8	13.2		Avg.	25	86.9	13.1
Time Min.	Sample No.	Weight gm.	1 %	2 %	Time Min.	Sample No.	Weight gm.	1 %	2 %
1:00	C-1	25	86.0	14.0	1:20	D-1	25	85.6	14.4
1:20	-2	25	86.8	13.2	1:40	-2	25	86.8	13.2
1:40	-3	25	88.4	11.6	2:00	-3	25	88.0	12.0
2:00	-4	25	87.6	12.4	2:20	-4	25	88.4	11.6
	-5					-5			
	Avg.	25	87.1	12.9		Avg.	25	87.2	12.8

Elapsed Feed Time - 1:21 min. Elapsed Time of Run - 2:30 min.

Average Deviation from a Heterogeneous Mixture

A- 3.2 % B- 3.1 % C- 2.9 % D- 2.8 %

DATA SHEET FOR SCREW CONVEYOR TYPE MIXER

Test No. I-5 Date 2/24/42

Materials:

	1	2
	Chert	Copper Sulfate
Density (lb./cu.ft.)	147.3	143.5
Particle Size (mesh)	50	50
Feed Rate (cu.ft./hr.)	5.44	0.60
Weight Charged (lb.)	18	2
Percent Total Weight	90	10

RPM of Mixer Elements 144 Total Feed Rate 6.04 cu.ft./hr.

Avg. Time Between Samples 20 sec. Retained in system 0.50 lb.

Approximate Time of Run 2 P.M.

SAMPLE ANALYSIS

Time Min.	Sample No.	Weight gm.	1 %	2 %	Time Min.	Sample No.	Weight gm.	1 %	2 %
0:20	A-1	25	88.0	12.0	0:40	B-1	25	88.8	11.2
0:40	-2	25	89.2	10.8	1:00	-2	25	89.6	10.4
1:00	-3	25	88.8	11.2	1:20	-3	25	89.2	10.8
1:20	-4	25	87.2	12.8	1:40	-4	25	86.8	13.2
	-5					-5			
	Avg.	25	88.3	11.7		Avg.	25	88.6	11.4
Time Min.	Sample No.	Weight gm.	1 %	2 %	Time Min.	Sample No.	Weight gm.	1 %	2 %
1:00	C-1	25	87.2	12.8	1:20	D-1	25	88.8	11.2
1:20	-2	25	89.6	10.4	1:40	-2	25	90.0	10.0
1:40	-3	25	89.2	10.8	2:00	-3	25	89.6	10.4
2:00	-4	25	89.6	10.4	2:20	-4	25	88.8	11.2
	-5					-5			
	Avg.	25	88.9	11.1		Avg.	25	89.3	10.7

Elapsed Feed Time - 1:21 min. Elapsed Time of Run - 2:20 min.

Average Deviation from a Heterogeneous Mixture

A- 1.7 % B- 1.4 % C- 1.1 % D- 0.7 %

Effect of Feed Rate on Mixing. -- The following six tables (pages 33 to 39) show the results of the runs made with feed rates of 3, 6, and 12 cubic feet per hour at mixer element speeds of 56 and 108 rpm. All other factors were constant and the materials used in each run were chert and copper sulfate.

DATA SHEET FOR SCREW CONVEYOR TYPE MIXER

Test No. II-1 Date 2/28/42

Materials:

	1	2
	Chert	Copper Sulfate
Density (lb./cu.ft.)	147.3	143.5
Particle Size (mesh)	50	50
Feed Rate (cu.ft./hr.)	2.96	0.34
Weight Charged (lb.)	18	2
Percent Total Weight	90	10

RPM of Mixer Elements 108 Total Feed Rate 3.40 cu.ft./hr.

Avg. Time Between Samples 30 sec. Retained in system 1.50 lb.

Approximate Time of Run 2 P.M.

SAMPLE ANALYSIS

Time Min.	Sample No.	Weight gm.	1 %	2 %	Time Min.	Sample No.	Weight gm.	1 %	2 %
0:30	A-1	25	86.8	13.2	1:00	B-1	25	86.0	14.0
1:00	-2	25	89.2	10.8	1:30	-2	25	90.0	10.0
1:30	-3	25	88.8	11.2	2:00	-3	25	89.6	10.4
2:00	-4	25	89.2	10.8	2:30	-4	25	88.8	11.2
	-5					-5			
	Avg.	25	88.5	11.5		Avg.	25	88.6	11.4
Time Min.	Sample No.	Weight gm.	1 %	2 %	Time Min.	Sample No.	Weight gm.	1 %	2 %
1:30	C-1	25	88.4	11.6	2:00	D-1	25	86.4	13.6
2:00	-2	25	86.4	13.6	2:30	-2	25	89.6	10.4
2:30	-3	25	89.6	10.4	3:00	-3	25	88.8	11.2
3:00	-4	25	89.6	10.4	3:30	-4	25	88.8	11.2
	-5					-5			
	Avg.	25	88.5	11.5		Avg.	25	88.4	11.6

Elapsed Feed Time - 2:20 min. Elapsed Time of Run - 4:00 min.

Average Deviation from a Heterogeneous Mixture

A- 1.5 % B- 1.4 % C- 1.5 % D- 1.6 %

DATA SHEET FOR SCREW CONVEYOR TYPE MIXER

Test No. II-2 Date 2/28/42

Materials:

	1	2
	Chert	Copper Sulfate
Density (lb./cu.ft.)	147.3	143.5
Particle Size (mesh)	50	50
Feed Rate (cu.ft./hr.)	2.96	0.34
Weight Charged (lb.)	18	2
Percent Total Weight	90	10

RPM of Mixer Elements 56 Total Feed Rate 3.40 cu.ft./hr.

Avg. Time Between Samples 45 sec. Retained in system 1.50 lb.

Approximate Time of Run 5 P.M.

SAMPLE ANALYSIS

Time Min.	Sample No.	Weight gm.	1 %	2 %	Time Min.	Sample No.	Weight gm.	1 %	2 %
0:45	A-1	25	83.6	16.4	1:30	B-1	25	83.6	16.4
1:30	-2	25	90.3	9.7	2:15	-2	25	90.4	9.6
2:15	-3	25	88.4	11.6	3:00	-3	25	88.8	11.2
3:00	-4	25	87.2	12.8	3:45	-4	25	88.8	11.2
	-5					-5			
	Avg.	25	87.3	12.7		Avg.	25	87.7	12.3
Time Min.	Sample No.	Weight gm.	1 %	2 %	Time Min.	Sample No.	Weight gm.	1 %	2 %
2:15	C-1	25	83.6	16.4	3:00	D-1	25	82.8	17.2
3:00	-2	25	90.4	9.6	3:45	-2	25	90.4	9.6
3:45	-3	25	88.8	11.2	4:30	-3	25	89.6	10.4
4:30	-4	25	88.8	11.2	5:15	-4	25	88.8	11.2
	-5					-5			
	Avg.	25	87.9	12.1		Avg.	25	87.9	12.1

Elapsed Feed Time - 2:20 min. Elapsed Time of Run - 5:15 min.

Average Deviation from a Heterogeneous Mixture

A- 2.7 % B- 2.3 % C- 2.1 % D- 2.1 %

DATA SHEET FOR SCREW CONVEYOR TYPE MIXER

Test No. II-3 Date 3/2/42

Materials:

	1	2
	Chert	Copper Sulfate
Density (lb./cu.ft.)	147.3	143.5
Particle Size (mesh)	50	50
Feed Rate (cu.ft./hr.)	10.87	1.21
Weight Charged (lb.)	18	2
Percent Total Weight	90	10

RPM of Mixer Elements 56 Total Feed Rate 12.08 cu.ft./hr.

Avg. Time Between Samples 20 sec. Retained in system 1.50 lb.

Approximate Time of Run 2 P.M.

SAMPLE ANALYSIS

Time Min.	Sample No.	Weight gm.	1 %	2 %	Time Min.	Sample No.	Weight gm.	1 %	2 %
0:40	A-1	25	89.6	10.4	1:20	B-1	25	89.6	10.4
1:00	-2	25	90.4	9.6	1:40	-2	25	90.0	10.0
1:20	-3	25	87.6	12.4	2:00	-3	25	88.0	12.0
1:40	-4	25	87.2	12.8	2:20	-4	25	88.0	12.0
	-5					-5			
	Avg.	25	88.7	11.3		Avg.	25	88.9	11.1
Time Min.	Sample No.	Weight gm.	1 %	2 %	Time Min.	Sample No.	Weight gm.	1 %	2 %
2:00	C-1	25	90.0	10.0	2:40	D-1	25	90.4	9.6
2:20	-2	25	89.2	10.8	3:00	-2	25	90.0	10.0
2:40	-3	25	90.4	9.6	3:20	-3	25	89.6	10.4
3:00	-4	25	89.6	10.4	3:40	-4	25	89.6	10.4
	-5					-5			
	Avg.	25	89.8	10.2		Avg.	25	89.9	10.1

Elapsed Feed Time - 0:40 min. Elapsed Time of Run - 3:40 min.

Average Deviation from a Heterogeneous Mixture

A- 1.3 % B- 1.1 % C- 0.2 % D- 0.1 %

DATA SHEET FOR SCREW CONVEYOR TYPE MIXER

Test No. II-4 Date 3/3/42

Materials:

	1 Chert	2 Copper Sulfate
Density (lb./cu.ft.)	147.3	143.5
Particle Size (mesh)	50	50
Feed Rate (cu.ft./hr.)	10.87	1.21
Weight Charged (lb.)	18	2
Percent Total Weight	90	10

RPM of Mixer Elements 108 Total Feed Rate 12.08 cu.ft./hr.

Avg. Time Between Samples 20 sec. Retained in system 1.25 lb.

Approximate Time of Run 2 P.M.

SAMPLE ANALYSIS

Time Min.	Sample No.	Weight gm.	1 %	2 %	Time Min.	Sample No.	Weight gm.	1 %	2 %
0:20	A-1	25	88.8	11.2	0:40	B-1	25	89.6	10.4
0:40	-2	25	90.0	10.0	1:00	-2	25	90.0	10.0
1:00	-3	25	90.0	10.0	1:20	-3	25	90.4	9.6
1:20	-4	25	89.2	10.8	1:40	-4	25	90.0	10.0
	-5					-5			
	Avg.	25	89.5	10.5		Avg.	25	90.0	10.0
Time Min.	Sample No.	Weight gm.	1 %	2 %	Time Min.	Sample No.	Weight gm.	1 %	2 %
1:00	C-1	25	89.2	10.8	1:20	D-1	25	89.6	10.4
1:20	-2	25	90.0	10.0	1:40	-2	25	90.0	10.0
1:40	-3	25	90.0	10.0	2:00	-3	25	90.4	9.6
2:00	-4	25	90.8	9.2	2:20	-4	25	90.0	10.0
	-5					-5			
	Avg.	25	90.0	10.0		Avg.	25	90.0	10.0

Elapsed Feed Time - 0:40 min. Elapsed Time of Run - 2:30 min.

Average Deviation from a Heterogeneous Mixture

A- 0.5 % B- 0.0 % C- 0.0 % D- 0.0 %

DATA SHEET FOR SCREW CONVEYOR TYPE MIXER

Test No. II-5 Date 2/20/42

Materials:

	1	2
	Chert	Copper Sulfate
Density (lb./cu.ft.)	147.3	143.5
Particle Size (mesh)	50	50
Feed Rate (cu.ft./hr.)	5.44	0.60
Weight Charged (lb.)	18	2
Percent Total Weight	90	10

RPM of Mixer Elements 56 Total Feed Rate 6.04 cu.ft./hr.

Avg. Time Between Samples 30 sec. Retained in system 1.25 lb.

Approximate Time of Run 2 P.M.

SAMPLE ANALYSIS

Time Min.	Sample No.	Weight gm.	1 %	2 %	Time Min.	Sample No.	Weight gm.	1 %	2 %
0:30	A-1	25	84.4	15.6	1:00	B-1	25	84.8	15.2
1:00	-2	25	89.3	10.7	1:30	-2	25	88.4	11.6
1:30	-3	25	88.8	11.2	2:00	-3	25	89.3	10.7
2:00	-4	25	83.3	16.7	2:30	-4	25	83.6	16.4
	-5					-5			
	Avg.	25	86.4	13.6		Avg.	25	87.5	12.5
Time Min.	Sample No.	Weight gm.	1 %	2 %	Time Min.	Sample No.	Weight gm.	1 %	2 %
2:00	C-1	25	82.8	17.2	3:00	D-1	25	87.2	12.8
2:30	-2	25	88.4	11.6	3:30	-2	25	89.3	10.7
3:00	-3	25	88.4	11.6	4:00	-3	25	89.3	10.7
3:30	-4	25	89.5	10.5	4:30	-4	25	88.8	11.2
	-5					-5			
	Avg.	25	88.3	11.7		Avg.	25	88.6	11.4

Elapsed Feed Time - 1:21 min. Elapsed Time of Run - 4:45 min.

Average Deviation from a Heterogeneous Mixture

A- 3.6 % B- 2.5 % C- 1.7 % D- 1.4 %

DATA SHEET FOR SCREW CONVEYOR TYPE MIXER

Test No. II-6 Date 2/23/42

Materials:

	1 Chert	2 Copper Sulfate
Density (lb./cu.ft.)	147.3	143.5
Particle Size (mesh)	50	50
Feed Rate (cu.ft./hr.)	5.44	0.60
Weight Charged (lb.)	18	2
Percent Total Weight	90	10

RPM of Mixer Elements 108 Total Feed Rate 6.04 cu.ft./hr.

Avg. Time Between Samples 20 sec. Retained in system 1.00 lb.

Approximate Time of Run 2 P.M.

SAMPLE ANALYSIS

Time Min.	Sample No.	Weight gm.	1 %	2 %	Time Min.	Sample No.	Weight gm.	1 %	2 %
0:20	A-1	25	85.2	14.8	0:40	B-1	25	85.6	14.4
0:40	-2	25	87.2	12.8	1:00	-2	25	86.8	13.2
1:00	-3	25	88.4	11.6	1:20	-3	25	87.2	12.8
1:20	-4	25	86.4	13.6	1:40	-4	25	88.0	12.0
	-5					-5			
	Avg.	25	86.8	13.2		Avg.	25	86.9	13.1
Time Min.	Sample No.	Weight gm.	1 %	2 %	Time Min.	Sample No.	Weight gm.	1 %	2 %
1:00	C-1	25	86.0	14.0	1:20	D-1	25	85.6	14.4
1:20	-2	25	86.8	13.2	1:40	-2	25	86.8	13.2
1:40	-3	25	88.4	11.6	2:00	-3	25	88.0	12.0
2:00	-4	25	87.6	12.4	2:20	-4	25	88.4	11.6
	-5					-5			
	Avg.	25	87.1	12.9		Avg.	25	87.2	12.8

Elapsed Feed Time - 1:21 min. Elapsed Time of Run - 2:30 min.

Average Deviation from a Heterogeneous Mixture

A- 3.2 % B- 3.1 % C- 2.9 % D- 2.8 %

Effect of Feed Proportions on Mixing. -- The following eight tables (pages 40 to 48) show the results of the runs made with feed proportions of 50-50, 60-40, 75-25, and 90-10 by weight at mixer element speeds of 56 and 108 rpm. All other factors were held constant and the materials used in each run were chert and copper sulfate.

DATA SHEET FOR SCREW CONVEYOR TYPE MIXER

Test No. III-1 Date 3/5/42

Materials:

	1 Chert	2 Copper Sulfate
Density (lb./cu.ft.)	147.3	143.5
Particle Size (mesh)	50	50
Feed Rate (cu.ft./hr.)	3.11	3.11
Weight Charged (lb.)	10	10
Percent Total Weight	50	50

RPM of Mixer Elements 56 Total Feed Rate 6.22 cu.ft./hr.

Avg. Time Between Samples 30 sec. Retained in system 1.00 lb.

Approximate Time of Run 2 P.M.

SAMPLE ANALYSIS

Time Min.	Sample No.	Weight gm.	1 %	2 %	Time Min.	Sample No.	Weight gm.	1 %	2 %
0:30	A-1	25	61.4	38.6	1:30	B-1	25	59.6	40.4
1:00	-2	25	59.4	40.6	2:00	-2	25	55.6	44.4
1:30	-3	25	52.4	47.6	2:30	-3	25	51.2	48.8
2:00	-4	25	49.6	50.4	3:00	-4	25	50.0	50.0
	-5					-5			
	Avg.	25	55.9	44.1		Avg.	25	54.1	45.9
Time Min.	Sample No.	Weight gm.	1 %	2 %	Time Min.	Sample No.	Weight gm.	1 %	2 %
2:00	C-1	25	58.8	41.2	2:30	D-1	25	55.3	44.7
2:30	-2	25	54.0	46.0	3:00	-2	25	53.1	46.9
3:00	-3	25	51.6	48.4	3:30	-3	25	51.0	49.0
3:30	-4	25	50.0	50.0	4:00	-4	25	50.0	50.0
	-5					-5			
	Avg.	25	53.6	46.4		Avg.	25	52.4	47.6

Elapsed Feed Time - 1:19 min. Elapsed Time of Run - 4:30 min.

Average Deviation from a Heterogeneous Mixture

A- 5.9 % B- 4.1 % C- 3.6 % D- 2.4 %

DATA SHEET FOR SCREW CONVEYOR TYPE MIXER

Test No. III-2 Date 3/5/42

Materials:

	1	2
	Chert	Copper Sulfate
Density (lb./cu.ft.)	147.3	143.5
Particle Size (mesh)	50	50
Feed Rate (cu.ft./hr.)	3.11	3.11
Weight Charged (lb.)	10	10
Percent Total Weight	50	50

RPM of Mixer Elements 108 Total Feed Rate 6.22 cu.ft./hr.

Avg. Time Between Samples 20 sec. Retained in system 1.00 lb.

Approximate Time of Run 5 P.M.

SAMPLE ANALYSIS

Time Min.	Sample No.	Weight gm.	1 %	2 %	Time Min.	Sample No.	Weight gm.	1 %	2 %
0:20	A-1	25	52.4	47.6	0:40	B-1	25	53.6	46.4
0:40	-2	25	48.0	52.0	1:00	-2	25	50.4	49.6
1:00	-3	25	48.4	51.6	1:20	-3	25	48.4	51.6
1:20	-4	25	54.4	45.6	1:40	-4	25	50.0	50.0
	-5					-5			
	Avg.	25	50.8	49.2		Avg.	25	50.6	49.4
Time Min.	Sample No.	Weight gm.	1 %	2 %	Time Min.	Sample No.	Weight gm.	1 %	2 %
1:00	C-1	25	50.0	50.0	1:20	D-1	25	52.8	47.2
1:20	-2	25	48.8	51.2	1:40	-2	25	48.8	51.2
1:40	-3	25	50.3	49.2	2:00	-3	25	50.0	50.0
2:00	-4	25	51.2	48.8	2:20	-4	25	48.4	51.6
	-5					-5			
	Avg.	25	50.2	49.8		Avg.	25	50.0	50.0

Elapsed Feed Time - 1:19 min. Elapsed Time of Run - 2:40 min.

Average Deviation from a Heterogeneous Mixture

A- 0.8 % B- 0.6 % C- 0.2 % D- 0.0 %

DATA SHEET FOR SCREW CONVEYOR TYPE MIXER

Test No. III-3 Date 3/9/42

Materials:

	1	2
	Chert	Copper Sulfate
Density (lb./cu.ft.)	147.3	143.5
Particle Size (mesh)	50	50
Feed Rate (cu.ft./hr.)	3.68	2.45
Weight Charged (lb.)	12	8
Percent Total Weight	60	40

RPM of Mixer Elements 108 Total Feed Rate 6.13 cu.ft./hr.

Avg. Time Between Samples 20 sec. Retained in system 0.75 lb.

Approximate Time of Run 2 P.M.

SAMPLE ANALYSIS

Time Min.	Sample No.	Weight gm.	1 %	2 %	Time Min.	Sample No.	Weight gm.	1 %	2 %
0:20	A-1	25	60.0	40.0	0:40	B-1	25	60.8	39.2
0:40	-2	25	60.0	40.0	1:00	-2	25	59.6	40.4
1:00	-3	25	59.2	40.8	1:20	-3	25	59.2	40.8
1:20	-4	25	58.8	41.2	1:40	-4	25	58.8	41.2
	-5					-5			
	Avg.	25	59.5	40.5		Avg.	25	59.6	40.4
Time Min.	Sample No.	Weight gm.	1 %	2 %	Time Min.	Sample No.	Weight gm.	1 %	2 %
1:00	C-1	25	61.2	38.8	1:20	D-1	25	61.6	38.4
1:20	-2	25	59.2	40.8	1:40	-2	25	59.6	40.4
1:40	-3	25	59.2	40.8	2:00	-3	25	59.2	40.8
2:00	-4	25	59.6	40.4	2:20	-4	25	59.6	40.4
	-5					-5			
	Avg.	25	59.8	40.2		Avg.	25	60.0	40.0

Elapsed Feed Time - 1:20 min. Elapsed Time of Run - 2:40 min.

Average Deviation from a Heterogeneous Mixture

A- 0.5 % B- 0.4 % C- 0.2 % D- 0.0 %

DATA SHEET FOR SCREW CONVEYOR TYPE MIXER

Test No. III-4 Date 3/10/42

Materials:

	1	2
	Chert	Copper Sulfate
Density (lb./cu.ft.)	147.3	143.5
Particle Size (mesh)	50	50
Feed Rate (cu.ft./hr.)	3.68	2.45
Weight Charged (lb.)	12	8
Percent Total Weight	60	40

RPM of Mixer Elements 56 Total Feed Rate 6.13 cu.ft./hr.

Avg. Time Between Samples 20 sec. Retained in system 1.00 lb.

Approximate Time of Run 2 P.M.

SAMPLE ANALYSIS

Time Min.	Sample No.	Weight gm.	1 %	2 %	Time Min.	Sample No.	Weight gm.	1 %	2 %
0:40	A-1	25	59.2	40.8	1:20	B-1	25	60.4	39.6
1:00	-2	25	56.4	43.6	1:40	-2	25	57.6	42.4
1:20	-3	25	57.6	42.4	2:00	-3	25	57.6	42.4
1:40	-4	25	58.0	42.0	2:20	-4	25	57.2	42.8
	-5					-5			
	Avg.	25	57.8	42.2		Avg.	25	58.3	41.7
Time Min.	Sample No.	Weight gm.	1 %	2 %	Time Min.	Sample No.	Weight gm.	1 %	2 %
2:00	C-1	25	61.2	38.8	2:40	D-1	25	62.0	38.0
2:20	-2	25	57.2	42.8	3:00	-2	25	57.6	42.4
2:40	-3	25	57.2	42.8	3:20	-3	25	57.2	42.8
3:00	-4	25	58.0	42.0	3:40	-4	25	57.6	42.4
	-5					-5			
	Avg.	25	58.4	41.6		Avg.	25	58.6	41.4

Elapsed Feed Time - 1:20 min. Elapsed Time of Run - 4:00 min.

Average Deviation from a Heterogeneous Mixture

A- 2.2 % B- 1.7 % C- 1.6 % D- 1.4 %

DATA SHEET FOR SCREW CONVEYOR TYPE MIXER

Test No. III-5 Date 3/11/42

Materials:

	1	2
	Chert	Copper Sulfate
Density (lb./cu.ft.)	147.3	143.5
Particle Size (mesh)	50	50
Feed Rate (cu.ft./hr.)	4.60	1.53
Weight Charged (lb.)	15	5
Percent Total Weight	75	25

RPM of Mixer Elements 56 Total Feed Rate 6.13 cu.ft./hr.

Avg. Time Between Samples 20 sec. Retained in system 1.00 lb.

Approximate Time of Run 2 P.M.

SAMPLE ANALYSIS

Time Min.	Sample No.	Weight gm.	1 %	2 %	Time Min.	Sample No.	Weight gm.	1 %	2 %
0:40	A-1	25	68.0	32.0	1:20	B-1	25	69.6	30.4
1:00	-2	25	72.1	27.9	1:40	-2	25	72.8	27.2
1:20	-3	25	72.4	27.6	2:00	-3	25	74.0	26.0
1:40	-4	25	72.4	27.6	2:20	-4	25	73.6	26.4
	-5					-5			
	Avg.	25	71.5	28.5		Avg.	25	72.5	27.5
Time Min.	Sample No.	Weight gm.	1 %	2 %	Time Min.	Sample No.	Weight gm.	1 %	2 %
2:00	C-1	25	71.6	28.4	2:40	D-1	25	73.4	26.6
2:20	-2	25	73.2	26.8	3:00	-2	25	74.2	25.8
2:40	-3	25	74.0	26.0	3:20	-3	25	74.4	25.6
3:00	-4	25	74.4	25.6	3:40	-4	25	74.0	26.0
	-5					-5			
	Avg.	25	73.3	26.7		Avg.	25	74.0	26.0

Elapsed Feed Time - 1:20 min. Elapsed Time of Run - 4:00 min.

Average Deviation from a Heterogeneous Mixture

A- 3.5 % B- 2.5 % C- 1.7 % D- 1.0 %

DATA SHEET FOR SCREW CONVEYOR TYPE MIXER

Test No. III-6 Date 3/14/42

Materials:

	1	2
	Chert	Copper Sulfate
Density (lb./cu.ft.)	147.3	143.5
Particle Size (mesh)	50	50
Feed Rate (cu.ft./hr.)	4.60	1.53
Weight Charged (lb.)	15	5
Percent Total Weight	75	25

RPM of Mixer Elements 108 Total Feed Rate 6.13 cu.ft./hr.

Avg. Time Between Samples 20 sec. Retained in system 0.75 lb.

Approximate Time of Run 2 P.M.

SAMPLE ANALYSIS

Time Min.	Sample No.	Weight gm.	1 %	2 %	Time Min.	Sample No.	Weight gm.	1 %	2 %
0:20	A-1	25	73.2	26.8	0:40	B-1	25	73.6	26.4
0:40	-2	25	73.2	26.8	1:00	-2	25	74.8	25.2
1:00	-3	25	74.0	26.0	1:20	-3	25	74.0	26.0
1:20	-4	25	72.8	27.2	1:40	-4	25	73.6	26.4
	-5					-5			
	Avg.	25	73.3	26.7		Avg.	25	74.0	26.0
Time Min.	Sample No.	Weight gm.	1 %	2 %	Time Min.	Sample No.	Weight gm.	1 %	2 %
1:00	C-1	25	73.4	26.6	1:20	D-1	25	74.4	25.6
1:20	-2	25	74.4	25.6	1:40	-2	25	74.8	25.2
1:40	-3	25	74.7	25.3	2:00	-3	25	74.4	25.6
2:00	-4	25	74.0	26.0	2:20	-4	25	73.2	26.8
	-5					-5			
	Avg.	25	74.1	25.9		Avg.	25	74.2	25.8

Elapsed Feed Time - 1:20 min. Elapsed Time of Run - 2:30 min.

Average Deviation from a Heterogeneous Mixture

A- 1.7 % B- 1.0 % C- 0.9 % D- 0.8 %

DATA SHEET FOR SCREW CONVEYOR TYPE MIXER

Test No. III-7 Date 2/20/42

Materials:

	1	2
	Chert	Copper Sulfate
Density (lb./cu.ft.)	147.3	143.5
Particle Size (mesh)	50	50
Feed Rate (cu.ft./hr.)	5.44	0.60
Weight Charged (lb.)	18	2
Percent Total Weight	90	10

RPM of Mixer Elements 56 Total Feed Rate 6.04 cu.ft./hr.

Avg. Time Between Samples 30 sec. Retained in system 1.25 lb.

Approximate Time of Run 2 P.M.

SAMPLE ANALYSIS

Time Min.	Sample No.	Weight gm.	1 %	2 %	Time Min.	Sample No.	Weight gm.	1 %	2 %
0.30	A-1	25	84.4	15.6	1:00	B-1	25	84.8	15.2
1:00	-2	25	89.3	10.7	1:30	-2	25	88.4	11.6
1:30	-3	25	88.8	11.2	2:00	-3	25	89.3	10.7
2:00	-4	25	83.3	16.7	2:30	-4	25	83.6	16.4
	-5					-5			
	Avg.	25	86.4	13.6		Avg.	25	87.5	12.5
Time Min.	Sample No.	Weight gm.	1 %	2 %	Time Min.	Sample No.	Weight gm.	1 %	2 %
2:00	C-1	25	82.8	17.2	3:00	D-1	25	87.2	12.8
2:30	-2	25	88.4	11.6	3:30	-2	25	89.3	10.7
3:00	-3	25	88.4	11.6	4:00	-3	25	89.3	10.7
3:30	-4	25	89.5	10.5	4:30	-4	25	88.8	11.2
	-5					-5			
	Avg.	25	88.3	11.7		Avg.	25	88.6	11.4

Elapsed Feed Time - 1:21 min. Elapsed Time of Run - 4:45 min.

Average Deviation from a Heterogeneous Mixture

A- 3.6 % B- 2.5% C- 1.7 % D- 1.4 %

DATA SHEET FOR SCREW CONVEYOR TYPE MIXER

Test No. III-8 Date 2/23/42

Materials:

	1	2
	Chert	Copper Sulfate
Density (lb./cu.ft.)	147.3	143.5
Particle Size (mesh)	50	50
Feed Rate (cu.ft./hr.)	5.44	0.60
Weight Charged (lb.)	18	2
Percent Total Weight	90	10

RPM of Mixer Elements 108 Total Feed Rate 6.04 cu.ft./hr.

Avg. Time Between Samples 20 sec. Retained in system 1.00 lb.

Approximate Time of Run 2 P.M.

SAMPLE ANALYSIS

Time Min.	Sample No.	Weight gm.	1 %	2 %	Time Min.	Sample No.	Weight gm.	1 %	2 %
0:20	A-1	25	85.2	14.8	0:40	B-1	25	85.6	14.4
0:40	-2	25	87.2	12.8	1:00	-2	25	86.8	13.2
1:00	-3	25	88.4	11.6	1:20	-3	25	87.2	12.8
1:20	-4	25	86.4	13.6	1:40	-4	25	88.0	12.0
	-5					-5			
	Avg.	25	86.8	13.2		Avg.	25	86.9	13.1
Time Min.	Sample No.	Weight gm.	1 %	2 %	Time Min.	Sample No.	Weight gm.	1 %	2 %
1:00	C-1	25	86.0	14.0	1:20	D-1	25	85.6	14.4
1:20	-2	25	86.8	13.2	1:40	-2	25	86.8	13.2
1:40	-3	25	88.4	11.6	2:00	-3	25	88.0	12.0
2:00	-4	25	87.6	12.4	2:20	-4	25	88.4	11.6
	-5					-5			
	Avg.	25	87.1	12.9		Avg.	25	87.2	12.8

Elapsed Feed Time - 1:21 min. Elapsed Time of Run - 2:30 min.

Average Deviation from a Heterogeneous Mixture

A- 3.2 % B- 3.1 % C- 2.9 % D- 2.8 %

Effect of Particle Size on Mixing. -- The following eight tables (pages 49 to 57) show the results of the runs made with particle sizes of 16, 20, and 50 mesh and fines at mixer element speeds of 56 and 108 rpm. All other factors were held constant and the materials used in each run were chert and copper sulfate.

DATA SHEET FOR SCREW CONVEYOR TYPE MIXER

Test No. IV-1 Date 3/26/42

Materials:

	1	2
	Chert	Copper Sulfate
Density (lb./cu.ft.)	147.3	143.5
Particle Size (mesh)	16	16
Feed Rate (cu.ft./hr.)	4.67	1.55
Weight Charged (lb.)	15	5
Percent Total Weight	75	25

RPM of Mixer Elements 108 Total Feed Rate 6.22 cu.ft./hr.

Avg. Time Between Samples 20 sec. Retained in system 0.75 lb.

Approximate Time of Run 2 P.M.

SAMPLE ANALYSIS

Time Min.	Sample No.	Weight gm.	1 %	2 %	Time Min.	Sample No.	Weight gm.	1 %	2 %
0:20	A-1	25	69.2	30.8	0:40	B-1	25	76.4	23.6
0:40	-2	25	64.0	36.0	1:00	-2	25	74.0	26.0
1:00	-3	25	69.2	30.8	1:20	-3	25	78.6	21.4
1:20	-4	25	76.8	23.2	1:40	-4	25	81.6	18.4
	-5					-5			
	Avg.	25	69.8	30.2		Avg.	25	77.7	22.3
Time Min.	Sample No.	Weight gm.	1 %	2 %	Time Min.	Sample No.	Weight gm.	1 %	2 %
1:00	C-1	25	67.6	32.4	1:20	D-1	25	74.0	26.0
1:20	-2	25	74.8	25.2	1:40	-2	25	70.4	29.6
1:40	-3	25	81.6	18.4	2:00	-3	25	80.0	20.0
2:00	-4	25	82.0	18.0	2:20	-4	25	80.8	19.2
	-5					-5			
	Avg.	25	76.5	23.5		Avg.	25	76.3	23.7

Elapsed Feed Time - 1:19 min. Elapsed Time of Run - 2:40 min.

Average Deviation from a Heterogeneous Mixture

A- 5.2 % B- 2.7 % C- 1.5 % D- 1.3 %

DATA SHEET FOR SCREW CONVEYOR TYPE MIXER

Test No. IV-2 Date 3/25/42

Materials:

	1	2
	Chert	Copper Sulfate
Density (lb./cu.ft.)	147.3	143.5
Particle Size (mesh)	16	16
Feed Rate (cu.ft./hr.)	4.67	1.55
Weight Charged (lb.)	15	5
Percent Total Weight	75	25

RPM of Mixer Elements 56 Total Feed Rate 6.22 cu.ft./hr.

Avg. Time Between Samples 20 sec. Retained in system 1.00 lb.

Approximate Time of Run 5 P.M.

SAMPLE ANALYSIS

Time Min.	Sample No.	Weight gm.	1 %	2 %	Time Min.	Sample No.	Weight gm.	1 %	2 %
0:40	A-1	25	75.6	24.4	1:20	B-1	25	80.0	20.0
1:00	-2	25	70.8	29.2	1:40	-2	25	75.2	24.8
1:20	-3	25	68.8	31.2	2:00	-3	25	79.2	20.8
1:40	-4	25	68.0	32.0	2:20	-4	25	76.8	23.2
	-5					-5			
	Avg.	25	70.8	29.2		Avg.	25	77.8	22.2
Time Min.	Sample No.	Weight gm.	1 %	2 %	Time Min.	Sample No.	Weight gm.	1 %	2 %
2:00	C-1	25	79.6	20.4	2:40	D-1	25	81.4	18.6
2:20	-2	25	78.8	21.2	3:00	-2	25	79.0	21.0
2:40	-3	25	75.2	24.8	3:20	-3	25	75.2	24.8
3:00	-4	25	75.2	24.8	3:40	-4	25	73.2	26.8
	-5					-5			
	Avg.	25	77.2	22.8		Avg.	25	77.2	22.8

Elapsed Feed Time - 1:19 min. Elapsed Time of Run - 4:00 min.

Average Deviation from a Heterogeneous Mixture

A- 4.2 % B- 2.8 % C- 2.2 % D- 2.2 %

DATA SHEET FOR SCREW CONVEYOR TYPE MIXER

Test No. IV-3 Date 3/27/42

Materials:

	1	2
	Chert	Copper Sulfate
Density (lb./cu.ft.)	147.3	143.5
Particle Size (mesh)	20	20
Feed Rate (cu.ft./hr.)	4.67	1.55
Weight Charged (lb.)	15	5
Percent Total Weight	75	25

RPM of Mixer Elements 56 Total Feed Rate 6.22 cu.ft./hr.

Avg. Time Between Samples 20 sec. Retained in system 1.00 lb.

Approximate Time of Run 2 P.M.

SAMPLE ANALYSIS

Time Min.	Sample No.	Weight gm.	1 %	2 %	Time Min.	Sample No.	Weight gm.	1 %	2 %
0:40	A-1	25	74.0	26.0	1:20	B-1	25	74.0	26.0
1:00	-2	25	74.4	25.6	1:40	-2	25	73.6	26.4
1:20	-3	25	73.6	26.4	2:00	-3	25	74.4	25.6
1:40	-4	25	74.8	25.2	2:20	-4	25	75.2	24.8
	-5					-5			
	Avg.	25	74.2	25.8		Avg.	25	74.3	25.7
Time Min.	Sample No.	Weight gm.	1 %	2 %	Time Min.	Sample No.	Weight gm.	1 %	2 %
2:00	C-1	25	73.6	26.4	2:40	D-1	25	74.0	26.0
2:20	-2	25	75.2	24.8	3:00	-2	25	74.4	25.6
2:40	-3	25	75.2	24.8	3:20	-3	25	74.8	25.2
3:00	-4	25	74.8	25.2	3:40	-4	25	75.6	24.4
	-5					-5			
	Avg.	25	74.7	25.3		Avg.	25	74.7	25.3

Elapsed Feed Time - 1:19 min. Elapsed Time of Run - 4:00 min.

Average Deviation from a Heterogeneous Mixture

A- 0.8 % B- 0.7 % C- 0.3 % D- 0.3 %

DATA SHEET FOR SCREW CONVEYOR TYPE MIXER

Test No. IV-4 Date 3/27/42

Materials:

	1	2
	Chert	Copper Sulfate
Density (lb./cu.ft.)	147.3	143.5
Particle Size (mesh)	20	20
Feed Rate (cu.ft./hr.)	4.67	1.55
Weight Charged (lb.)	15	5
Percent Total Weight	75	25

RPM of Mixer Elements 108 Total Feed Rate 6.22 cu.ft./hr.

Avg. Time Between Samples 20 sec., Retained in system 0.75 lb.

Approximate Time of Run 5 P.M.

SAMPLE ANALYSIS

Time Min.	Sample No.	Weight gm.	1 %	2 %	Time Min.	Sample No.	Weight gm.	1 %	2 %
0:20	A-1	25	77.6	22.4	0:40	B-1	25	76.0	24.0
0:40	-2	25	74.0	26.0	1:00	-2	25	75.2	24.8
1:00	-3	25	75.2	24.8	1:20	-3	25	76.0	24.0
1:20	-4	25	76.4	23.6	1:40	-4	25	75.6	24.4
	-5					-5			
	Avg.	25	75.8	24.2		Avg.	25	75.7	24.3
Time Min.	Sample No.	Weight gm.	1 %	2 %	Time Min.	Sample No.	Weight gm.	1 %	2 %
1:00	C-1	25	78.0	22.0	1:20	D-1	25	77.2	22.8
1:20	-2	25	74.4	25.6	1:40	-2	25	76.4	23.6
1:40	-3	25	74.4	25.6	2:00	-3	25	74.0	26.0
2:00	-4	25	76.0	24.0	2:20	-4	25	74.8	25.2
	-5					-5			
	Avg.	25	75.7	24.3		Avg.	25	75.6	24.4

Elapsed Feed Time - 1:19 min. Elapsed Time of Run - 2:30 min.

Average Deviation from a Heterogeneous Mixture

A- 0.8 % B- 0.7 % C- 0.7 % D- 0.6 %

DATA SHEET FOR SCREW CONVEYOR TYPE MIXER

Test No. IV-5 Date 3/11/42

Materials:

	1 Chert	2 Copper Sulfate
Density (lb./cu.ft.)	147.3	143.5
Particle Size (mesh)	50	50
Feed Rate (cu.ft./hr.)	4.60	1.53
Weight Charged (lb.)	15	5
Percent Total Weight	75	25

RPM of Mixer Elements 56 Total Feed Rate 6.13 cu.ft./hr.

Avg. Time Between Samples 20 sec. Retained in system 1.00 lb.

Approximate Time of Run 2 P.M.

SAMPLE ANALYSIS

Time Min.	Sample No.	Weight gm.	1 %	2 %	Time Min.	Sample No.	Weight gm.	1 %	2 %
0:40	A-1	25	68.0	32.0	1:20	B-1	25	69.6	30.4
1:00	-2	25	72.1	27.9	1:40	-2	25	72.8	27.2
1:20	-3	25	72.4	27.6	2:00	-3	25	74.0	26.0
1:40	-4	25	72.4	27.6	2:20	-4	25	73.6	26.4
	-5					-5			
	Avg.	25	71.5	28.5		Avg.	25	72.5	27.5
Time Min.	Sample No.	Weight gm.	1 %	2 %	Time Min.	Sample No.	Weight gm.	1 %	2 %
2:00	C-1	25	71.6	28.4	2:40	D-1	25	73.4	26.6
2:20	-2	25	73.2	26.8	3:00	-2	25	74.2	25.8
2:40	-3	25	74.0	26.0	3:20	-3	25	74.4	25.6
3:00	-4	25	74.4	25.6	3:40	-4	25	74.0	26.0
	-5					-5			
	Avg.	25	73.3	26.7		Avg.	25	74.0	26.0

Elapsed Feed Time - 1:20 min. Elapsed Time of Run - 4:00 min.

Average Deviation from a Heterogeneous Mixture

A- 3.5 % B- 2.5 % C- 1.7 % D- 1.0 %

DATA SHEET FOR SCREW CONVEYOR TYPE MIXER

Test No. IV-6 Date 3/14/42

Materials:

	1	2
	Chert	Copper Sulfate
Density (lb./cu.ft.)	147.3	143.5
Particle Size (mesh)	50	50
Feed Rate (cu.ft./hr.)	4.60	1.53
Weight Charged (lb.)	15	5
Percent Total Weight	75	25

RPM of Mixer Elements 108 Total Feed Rate 6.13 cu.ft./hr.

Avg. Time Between Samples 20 sec. Retained in system 0.75 lb.

Approximate Time of Run 2 P.M.

SAMPLE ANALYSIS

Time Min.	Sample No.	Weight gm.	1 %	2 %	Time Min.	Sample No.	Weight gm.	1 %	2 %
0:20	A-1	25	73.2	26.8	0:40	B-1	25	73.6	26.4
0:40	-2	25	73.2	26.8	1:00	-2	25	74.8	25.2
1:00	-3	25	74.0	26.0	1:20	-3	25	74.0	26.0
1:20	-4	25	72.8	27.2	1:40	-4	25	73.6	26.4
	-5					-5			
	Avg.	25	73.3	26.7		Avg.	25	74.0	26.0
Time Min.	Sample No.	Weight gm.	1 %	2 %	Time Min.	Sample No.	Weight gm.	1 %	2 %
1:00	C-1	25	73.4	26.6	1:20	D-1	25	74.4	25.6
1:20	-2	25	74.4	25.6	1:40	-2	25	74.8	25.2
1:40	-3	25	74.7	25.3	2:00	-3	25	74.4	25.6
2:00	-4	25	74.0	26.0	2:20	-4	25	73.2	26.8
	-5					-5			
	Avg.	25	74.1	25.9		Avg.	25	74.2	25.8

Elapsed Feed Time - 1:20 min. Elapsed Time of Run - 2:30 min.

Average Deviation from a Heterogeneous Mixture

A- 1.7 % B- 1.0 % C- 0.9 % D- 0.8 %

DATA SHEET FOR SCREW CONVEYOR TYPE MIXER

Test No. IV-7 Date 3/31/42

Materials:

	1	2
	Chert	Copper Sulfate
Density (lb./cu.ft.)	147.3	143.5
Particle Size (mesh)	Fines	Fines
Feed Rate (cu.ft./hr.)	4.67	1.55
Weight Charged (lb.)	15	5
Percent Total Weight	75	25

RPM of Mixer Elements 108 Total Feed Rate 6.22 cu.ft./hr.

Avg. Time Between Samples 20 sec. Retained in system 9.00 lb.

Approximate Time of Run 10 A.M.

SAMPLE ANALYSIS

Time Min.	Sample No.	Weight gm.	1 %	2 %	Time Min.	Sample No.	Weight gm.	1 %	2 %
0:40	A-1	25	72.0	28.0	1:00	B-1	25	70.4	29.6
1:00	-2	25	73.2	26.8	1:20	-2	25	68.8	31.2
1:20	-3	25	71.6	28.4	1:40	-3	25	78.4	21.6
	-4					-4			
	-5					-5			
	Avg.	25	72.3	27.7		Avg.	25	72.5	27.5
Time Min.	Sample No.	Weight gm.	1 %	2 %	Time Min.	Sample No.	Weight gm.	1 %	2 %
1:20	C-1	25	69.6	30.4	2:00	D-1	25	70.8	29.2
1:40	-2	25	72.4	27.6	2:20	-2	25	74.4	25.6
2:00	-3	25	76.4	23.6	2:40	-3	25	74.7	25.3
	-4					-4			
	-5					-5			
	Avg.	25	72.8	27.2		Avg.	25	73.3	26.7

Elapsed Feed Time - 1:19 min. Elapsed Time of Run - 2:40 min.

Average Deviation from a Heterogeneous Mixture

A- 2.7 % B- 2.5 % C- 2.2 % D- 1.7 %

DATA SHEET FOR SCREW CONVEYOR TYPE MIXER

Test No. IV-8 Date 4/1/42

Materials:

	1	2
	Chert	Copper Sulfate
Density (lb./cu.ft.)	147.3	143.5
Particle Size (mesh)	Fines	Fines
Feed Rate (cu.ft./hr.)	4.67	1.55
Weight Charged (lb.)	15	5
Percent Total Weight	75	25

RPM of Mixer Elements 56 Total Feed Rate 6.22 cu.ft./hr.

Avg. Time Between Samples 20 sec. Retained in system 7.00 lb.

Approximate Time of Run 10 A.M.

SAMPLE ANALYSIS

Time Min.	Sample No.	Weight gm.	1 %	2 %	Time Min.	Sample No.	Weight gm.	1 %	2 %
0:40	A-1	25	68.8	31.2	1:20	B-1	25	67.6	32.4
1:00	-2	25	68.8	31.2	1:40	-2	25	69.2	30.8
1:20	-3	25	74.0	26.0	2:00	-3	25	75.2	24.8
1:40	-4	25	75.6	24.4	2:20	-4	25	75.6	24.4
	-5					-5			
	Avg.	25	71.8	28.2		Avg.	25	71.9	28.1
Time Min.	Sample No.	Weight gm.	1 %	2 %	Time Min.	Sample No.	Weight gm.	1 %	2 %
2:00	C-1	25	70.0	30.0	2:40	D-1	25	72.0	28.0
2:20	-2	25	71.6	28.4	3:00	-2	25	73.0	27.0
2:40	-3	25	76.0	24.0	3:20	-3	25	73.0	27.0
3:00	-4	25	71.6	28.4		-4			
	-5					-5			
	Avg.	25	72.3	27.7		Avg.	25	72.7	27.3

Elapsed Feed Time - 1:19 min. Elapsed Time of Run - 3:20 min.

Average Deviation from a Heterogeneous Mixture

A- 3.2 % B- 3.1 % C- 2.7 % D- 2.3 %

Effect of Difference in Density on Mixing. -- The following six tables (pages 58 to 64) show the results of the runs made with materials of densities of 280.8, 192.8, and 147.3 pounds per cubic foot with a material of a density of 143.5 pounds per cubic foot at mixer element speeds of 56 and 108 rpm. The crystalline structures of these materials were not the same in these runs and a study of the effect of this factor on mixing as compared to a difference in density may be found under Preliminary Investigations on page 21. All other factors were held constant during these runs.

DATA SHEET FOR SCREW CONVEYOR TYPE MIXER

Test No. V-1 Date 4/10/42

Materials:

	1	2
	Barytes	Copper Sulfate
Density (lb./cu.ft.)	280.8	143.5
Particle Size (mesh)	50	50
Feed Rate (cu.ft./hr.)	4.50	1.50
Weight Charged (lb.)	17.1	2.9
Percent Total Weight	85.5	14.5

RPM of Mixer Elements 56 Total Feed Rate 6.00 cu.ft./hr.

Avg. Time Between Samples 20 sec. Retained in system 5.00 lb.

Approximate Time of Run 2 P.M.

SAMPLE ANALYSIS

Time Min.	Sample No.	Weight gm.	1 %	2 %	Time Min.	Sample No.	Weight gm.	1 %	2 %
0:40	A-1	25	84.4	15.6	1:20	B-1	25	88.4	11.6
1:00	-2	25	85.2	14.8	1:40	-2	25	84.8	15.2
1:20	-3	25	84.8	15.2	2:00	-3	25	86.0	14.0
	-4					-4			
	-5					-5			
	Avg.	25	84.8	15.2		Avg.	25	86.4	13.6
Time Min.	Sample No.	Weight gm.	1 %	2 %	Time Min.	Sample No.	Weight gm.	1 %	2 %
2:00	C-1	25	88.4	11.6	2:20	D-1	25	85.2	14.8
2:20	-2	25	86.8	13.2	2:40	-2	25	86.0	14.0
2:40	-3	25	82.8	17.2	3:00	-3	25	85.6	14.4
	-4					-4			
	-5					-5			
	Avg.	25	86.0	14.0		Avg.	25	85.6	14.4

Elapsed Feed Time - 0:49 min. Elapsed Time of Run - 3:20 min.

Average Deviation from a Heterogeneous Mixture

A- 0.7 % B- 0.9 % C- 0.5 % D- 0.1 %

DATA SHEET FOR SCREW CONVEYOR TYPE MIXER

Test No. V-2 Date 4/11/42

Materials:

	1 Barytes	2 Copper Sulfate
Density (lb./cu.ft.)	280.8	143.5
Particle Size (mesh)	50	50
Feed Rate (cu.ft./hr.)	4.50	1.50
Weight Charged (lb.)	17.1	2.9
Percent Total Weight	85.5	14.5

RPM of Mixer Elements 108 Total Feed Rate 6.00 cu.ft./hr.

Avg. Time Between Samples 20 sec. Retained in system 6.00 lb.

Approximate Time of Run 2 P.M.

SAMPLE ANALYSIS

Time Min.	Sample No.	Weight gm.	1 %	2 %	Time Min.	Sample No.	Weight gm.	1 %	2 %
0:20	A-1	25	83.2	16.8	0:40	B-1	25	83.2	16.8
0:40	-2	25	84.0	16.0	1:00	-2	25	83.8	16.2
1:00	-3	25	83.6	16.4	1:20	-3	25	83.8	16.2
	-4					-4			
	-5					-5			
	Avg.	25	83.6	16.4		Avg.	25	83.6	16.4
Time Min.	Sample No.	Weight gm.	1 %	2 %	Time Min.	Sample No.	Weight gm.	1 %	2 %
1:20	C-1	25	86.0	14.0	2:00	D-1	25	88.8	11.2
1:40	-2	25	82.4	17.6	2:20	-2	25	82.4	17.6
2:00	-3	25	82.4	17.6	2:40	-3	25	80.8	19.2
	-4					-4			
	-5					-5			
	Avg.	25	83.6	16.4		Avg.	25	84.0	16.0

Elapsed Feed Time - 0:49 min. Elapsed Time of Run - 2:40 min.

Average Deviation from a Heterogeneous Mixture

A- 1.9 % B- 1.9 % C- 1.9 % D- 1.5 %

DATA SHEET FOR SCREW CONVEYOR TYPE MIXER

Test No. V-3 Date 4/16/42

Materials:

	1	2
	Andalusite	Copper Sulfate
Density (lb./cu.ft.)	192.8	143.5
Particle Size (mesh)	50	50
Feed Rate (cu.ft./hr.)	4.50	4.50
Weight Charged (lb.)	16	4
Percent Total Weight	80	20

RPM of Mixer Elements 108 Total Feed Rate 6.00 cu.ft./hr.

Avg. Time Between Samples 20 sec. Retained in system 4.75 lb.

Approximate Time of Run 11 A.M.

SAMPLE ANALYSIS

Time Min.	Sample No.	Weight gm.	1 %	2 %	Time Min.	Sample No.	Weight gm.	1 %	2 %
0:20	A-1	25	79.2	20.8	0:40	B-1	25	76.8	13.2
0:40	-2	25	80.0	20.0	1:00	-2	25	78.8	21.2
1:00	-3	25	80.0	20.0	1:20	-3	25	80.0	20.0
1:20	-4	25	76.0	24.0	1:40	-4	25	79.2	20.8
	-5					-5			
	Avg.	25	78.8	21.2		Avg.	25	78.7	21.3
Time Min.	Sample No.	Weight gm.	1 %	2 %	Time Min.	Sample No.	Weight gm.	1 %	2 %
1:00	C-1	25	78.0	22.0	1:40	D-1	25	79.6	20.4
1:20	-2	25	78.4	21.6	2:00	-2	25	78.8	21.2
1:40	-3	25	80.0	20.0	2:20	-3	25	76.8	23.2
2:00	-4	25	78.4	21.6	2:40	-4	25	79.6	20.4
	-5					-5			
	Avg.	25	78.7	21.3		Avg.	25	78.7	21.3

Elapsed Feed Time - 1.06 min. Elapsed Time of Run - 2:40 min.

Average Deviation from a Heterogeneous Mixture

A- 1.2 % B- 1.3 % C- 1.3 % D- 1.3 %

DATA SHEET FOR SCREW CONVEYOR TYPE MIXER

Test No. V-4 Date 4/16/42

Materials:

	1	2
	Andalusite	Copper Sulfate
Density (lb./cu.ft.)	192.8	143.5
Particle Size (mesh)	50	50
Feed Rate (cu.ft./hr.)	4.50	4.50
Weight Charged (lb.)	16	4
Percent Total Weight	80	20

RPM of Mixer Elements 56 Total Feed Rate 6.00 cu.ft./hr.

Avg. Time Between Samples 20 sec. Retained in system 3.75 lb.

Approximate Time of Run 2 P.M.

SAMPLE ANALYSIS

Time Min.	Sample No.	Weight gm.	1 %	2 %	Time Min.	Sample No.	Weight gm.	1 %	2 %
0:40	A-1	25	78.4	21.6	1:20	B-1	25	79.2	20.8
1:00	-2	25	78.4	21.6	1:40	-2	25	79.2	20.8
1:20	-3	25	80.8	19.2	2:00	-3	25	78.8	21.2
1:40	-4	25	76.8	23.2	2:20	-4	25	80.0	20.0
	-5					-5			
	Avg.	25	78.6	21.4		Avg.	25	79.3	20.7
Time Min.	Sample No.	Weight gm.	1 %	2 %	Time Min.	Sample No.	Weight gm.	1 %	2 %
2:00	C-1	25	78.4	21.6	2:40	D-1	25	81.6	18.4
2:20	-2	25	81.6	18.4	3:00	-2	25	80.4	19.6
2:40	-3	25	80.0	20.0	3:20	-3	25	78.8	21.2
3:00	-4	25	77.6	22.4	3:40	-4	25	76.4	23.6
	-5					-5			
	Avg.	25	79.4	20.6		Avg.	25	79.3	20.7

Elapsed Feed Time - 1:06 min. Elapsed Time of Run - 4:00 min.

Average Deviation from a Heterogeneous Mixture

A- 1.4 % B- 0.7 % C- 0.6 % D- 0.7 %

DATA SHEET FOR SCREW CONVEYOR TYPE MIXER

Test No. V-5 Date 3/11/42

Materials:

	1	2
	Chert	Copper Sulfate
Density (lb./cu.ft.)	147.3	143.5
Particle Size (mesh)	50	50
Feed Rate (cu.ft./hr.)	4.60	1.53
Weight Charged (lb.)	15	5
Percent Total Weight	75	25

RPM of Mixer Elements 56 Total Feed Rate 6.13 cu.ft./hr.

Avg. Time Between Samples 20 sec. Retained in system 1.00 lb.

Approximate Time of Run 2 P.M.

SAMPLE ANALYSIS

Time Min.	Sample No.	Weight gm.	1 %	2 %	Time Min.	Sample No.	Weight gm.	1 %	2 %
0:40	A-1	25	68.0	32.0	1:20	B-1	25	69.6	30.4
1:00	-2	25	72.1	27.9	1:40	-2	25	72.8	27.2
1:20	-3	25	72.4	27.6	2:00	-3	25	74.0	26.0
1:40	-4	25	72.4	27.6	2:20	-4	25	73.6	26.4
	-5					-5			
	Avg.	25	71.5	28.5		Avg.	25	72.5	27.5
Time Min.	Sample No.	Weight gm.	1 %	2 %	Time Min.	Sample No.	Weight gm.	1 %	2 %
2:00	C-1	25	71.6	28.4	2:40	D-1	25	73.4	26.6
2:20	-2	25	73.2	26.8	3:00	-2	25	74.2	25.8
2:40	-3	25	74.0	26.0	3:20	-3	25	74.4	25.6
3:00	-4	25	74.4	25.6	3:40	-4	25	74.0	26.0
	-5					-5			
	Avg.	25	73.3	26.7		Avg.	25	74.0	26.0

Elapsed Feed Time - 1:20 min. Elapsed Time of Run - 4:00 min.

Average Deviation from a Heterogeneous Mixture

A- 3.5 % B- 2.5 % C- 1.7 % D- 1.0 %

DATA SHEET FOR SCREW CONVEYOR TYPE MIXER

Test No. V-6 Date 3/14/42

Materials:

	1 Chert	2 Copper Sulfate
Density (lb./cu.ft.)	147.3	143.5
Particle Size (mesh)	50	50
Feed Rate (cu.ft./hr.)	4.60	1.53
Weight Charged (lb.)	15	5
Percent Total Weight	75	25

RPM of Mixer Elements 108 Total Feed Rate 6.13 cu.ft./hr.

Avg. Time Between Samples 20 sec. Retained in system 0.75 lb.

Approximate Time of Run 2 P.M.

SAMPLE ANALYSIS

Time Min.	Sample No.	Weight gm.	1 %	2 %	Time Min.	Sample No.	Weight gm.	1 %	2 %
0:20	A-1	25	73.2	26.8	0:40	B-1	25	73.6	26.4
0:40	-2	25	73.2	26.8	1:00	-2	25	74.8	25.2
1:00	-3	25	74.0	26.0	1:20	-3	25	74.0	26.0
1:20	-4	25	72.8	27.2	1:40	-4	25	73.6	26.4
	-5					-5			
	Avg.	25	73.3	26.7		Avg.	25	74.0	26.0
Time Min.	Sample No.	Weight gm.	1 %	2 %	Time Min.	Sample No.	Weight gm.	1 %	2 %
1:00	C-1	25	73.4	26.6	1:20	D-1	25	74.4	25.6
1:20	-2	25	74.4	25.6	1:40	-2	25	74.8	25.2
1:40	-3	25	74.7	25.3	2:00	-3	25	74.4	25.6
2:00	-4	25	74.0	26.0	2:20	-4	25	73.2	26.8
	-5					-5			
	Avg.	25	74.1	25.9		Avg.	25	74.2	25.8

Elapsed Feed Time - 1:20 min. Elapsed Time of Run - 2:30 min.

Average Deviation from a Heterogeneous Mixture

A- 1.7 % B- 1.0 % C- 0.9 % D- 0.8 %

H. Results

On each of the following nine pages may be found a family of curves showing the relative position of the respective curves of the variable factors and their effect on mixing efficiency. Each of these curves is a plot of the per cent deviation from a perfect heterogeneous mixture, values taken from the preceding tables, against the feet of mixer at which samples were taken.

Effect of Speed of Mixer Elements on Mixing. -- Curve No. 1 on page 66, shows the effect of mixer element speeds of 40, 56, 72, 108, and 144 rpm. on mixing efficiency. All other factors were held constant during the runs and the materials used in each run were chert and copper sulfate.

Effect of Feed Rate on Mixing. -- Curves No. 2 and 3 on pages 67 and 68, respectively, show the effect of feed rates of 3, 6, and 12 cubic feet per hour on mixing efficiency at mixer element speeds of 56 and 108 rpm. All other factors were held constant and the materials used in each run were chert and copper sulfate.

Effect of Feed Proportions. -- Curves No. 4 and 5 on pages 69 and 70, respectively, show the effect on mixing efficiency of feed proportions of 50-50, 60-40, 75-25, and 90-10 by weight at mixer element speeds of 56 and 108 rpm. All other factors were held constant and the materials used in each run were chert and copper sulfate.

Effect of Particle Size on Mixing. -- Curves No. 6 and 7 on pages 71 and 72 ,respectively, show the effect on mixing efficiency of particle sizes of 16, 20, and 50 mesh and fines at mixer element speeds of 56 and 108 rpm. All other factors were held constant and the materials used in each run were chert and copper sulfate.

Effect of Difference in Density on Mixing. -- Curves No. 8 and 9 on pages 73 and 74, respectively, show the effect on mixing efficiency of using materials with densities of 280.8, 192.8, and 143.7 pounds per cubic foot with a material of a density of 143.5 pounds per cubic foot at a mixer element speed of 56 as well as 108 rpm. The crystalline structure of these materials were not the same in these runs and a study of the effect of this factor on mixing as compared to a difference in density may be found under Preliminary Investigations on page 21. All other factors were held constant during runs.

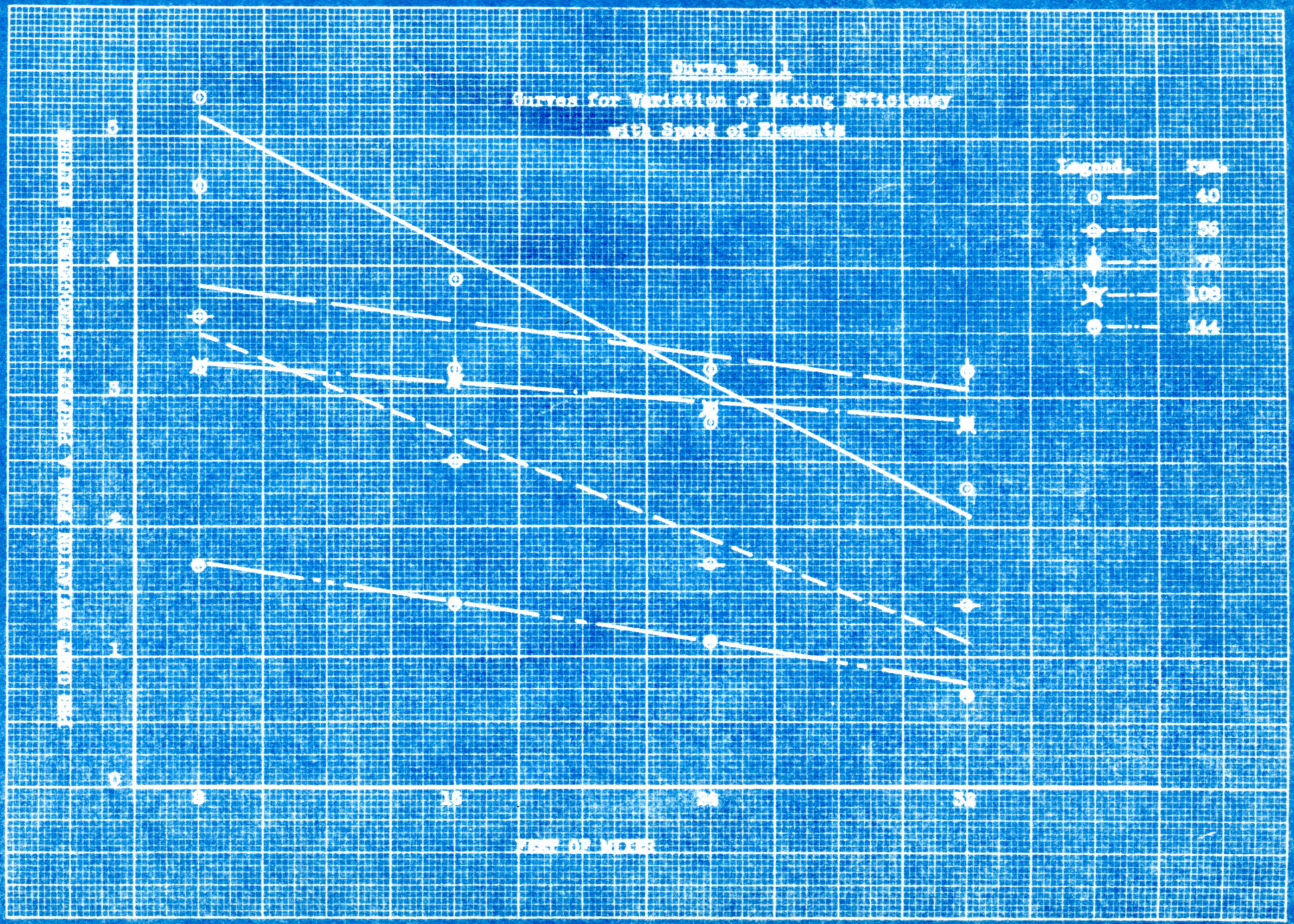
Curve No. 1
Curves for Variation of Mixing Efficiency
with Speed of Elements
Legend.
rpm.
40
56
72
108
144
0
1
2
3
4
5
8
16
24
32
FEET OF WATER

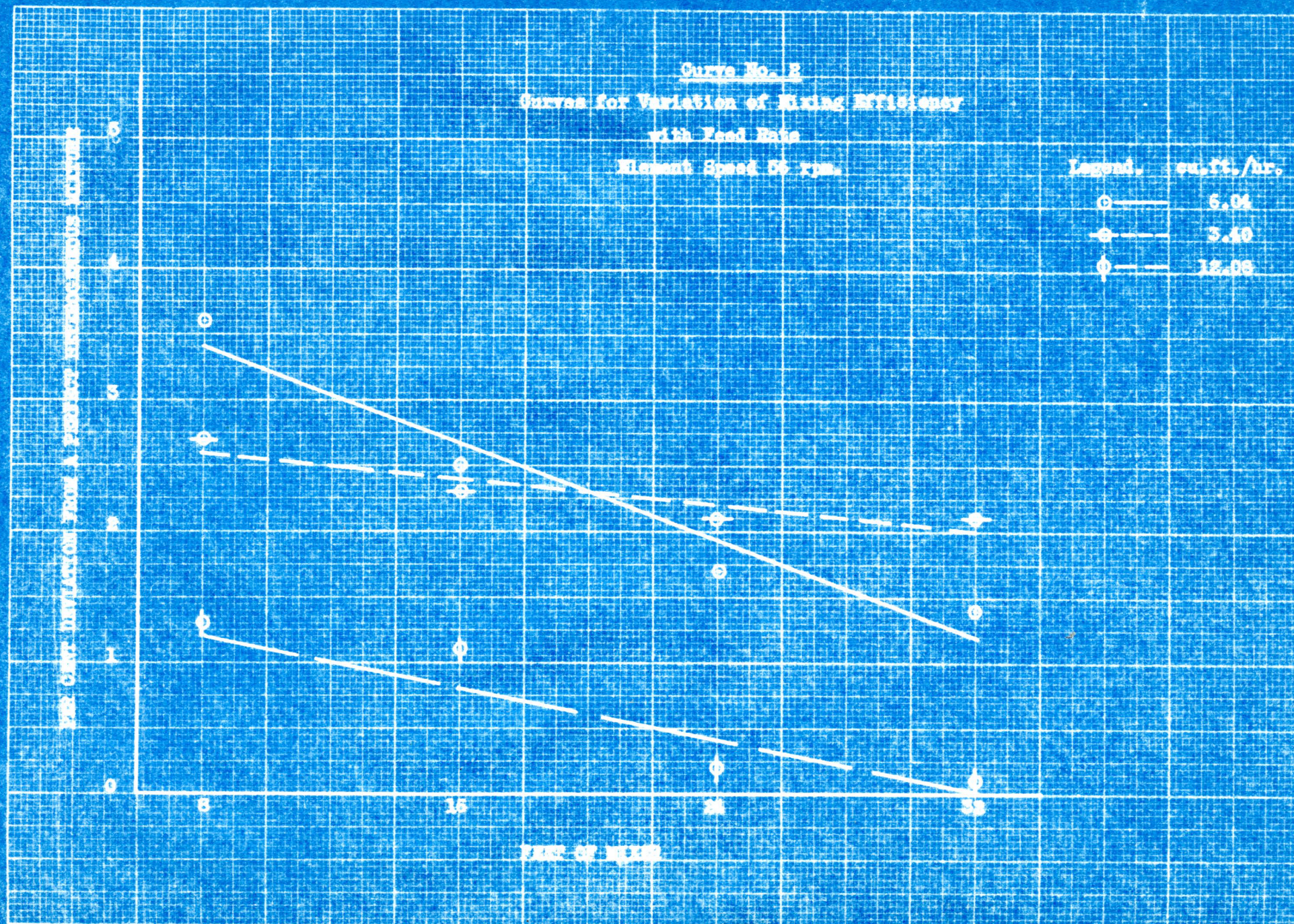
Curve No. 2
Curves for Variation of Mixing Efficiency
with Feed Rate
Element Speed 55 rpm.
Legend. cu.ft./hr.
6.04
3.40
12.08
0
1
2
3
4
5
8
16
24
32

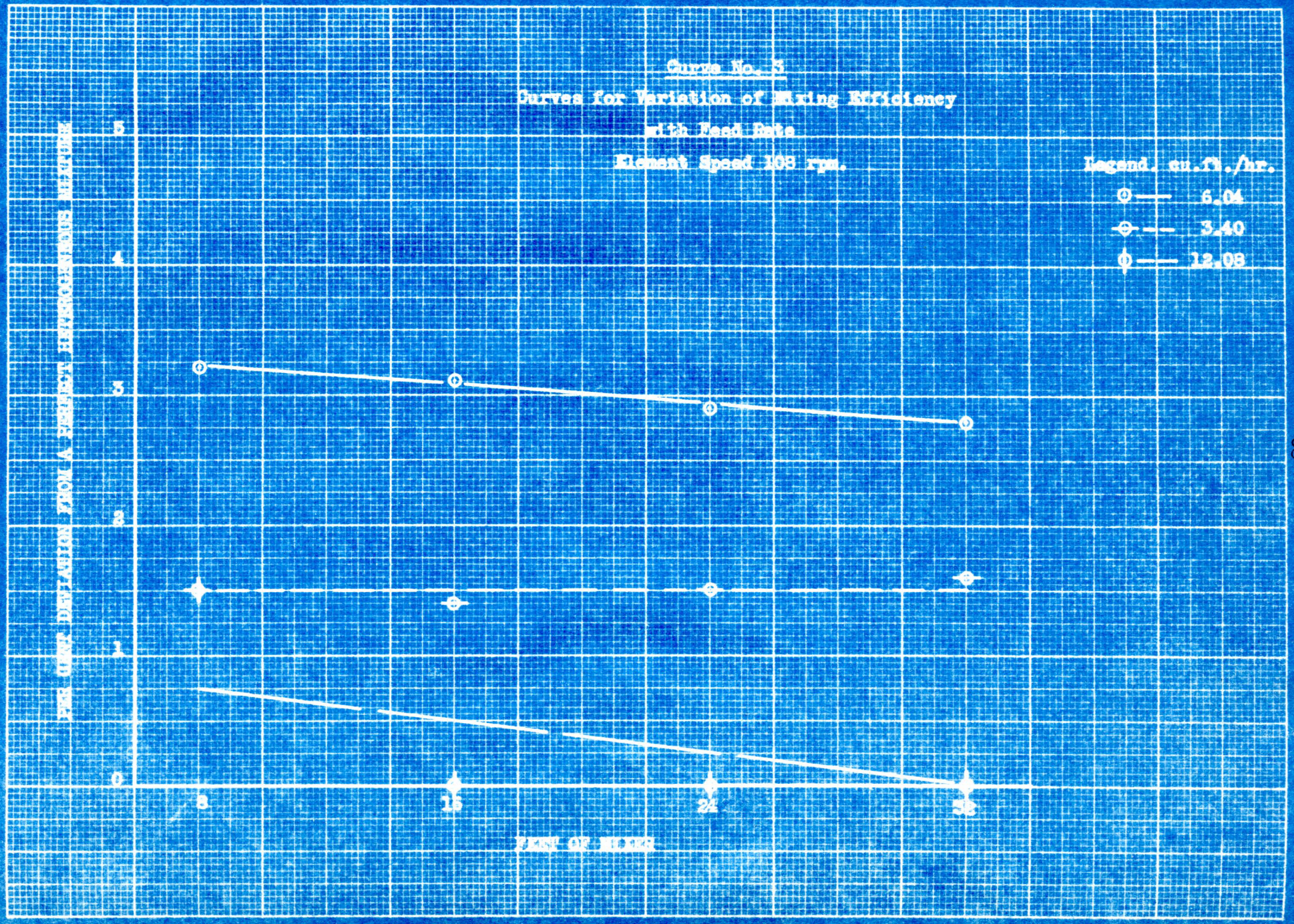
Curve No. 5
Curves for Variation of Mixing Efficiency
with Feed Rate
Element Speed 108 rpm.
Legend. cu.ft./hr.
6.04
3.40
12.08
PER CENT DEVIATION FROM A PERFECT HETEROGENEOUS MIXTURE
5
4
3
2
1
0
8
16
24
32
FEET OF MIXER

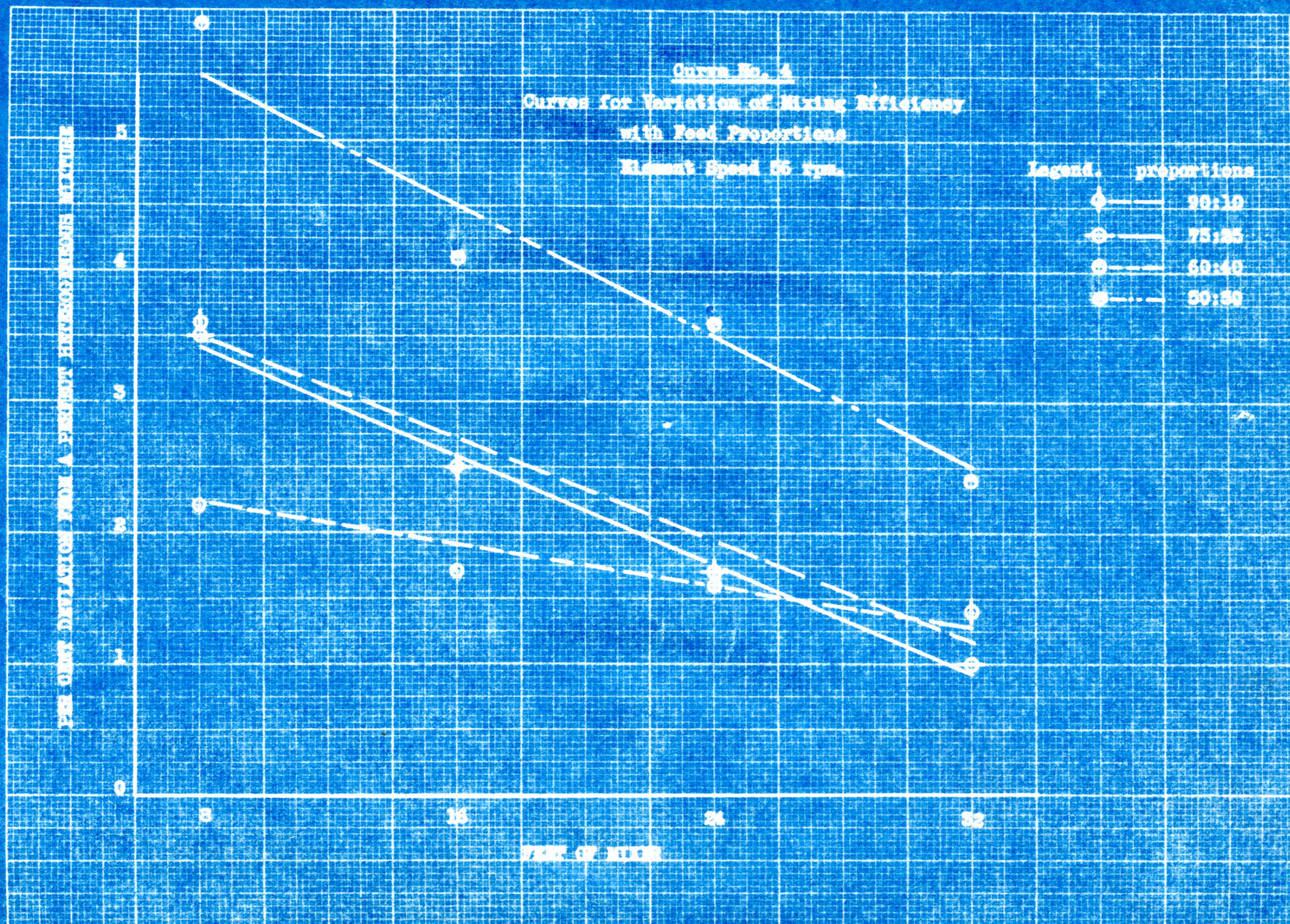
Curve No. 4
Curves for Variation of Mixing Efficiency
with Feed Proportions
Element Speed 55 rpm.
Legend. proportions
90:10
75:25
60:40
50:50
PER CENT DEVIATION FROM A PERFECT HOMOGENEOUS MIXTURE
0
1
2
3
4
5
8
16
24
32
TIME OF MIXING

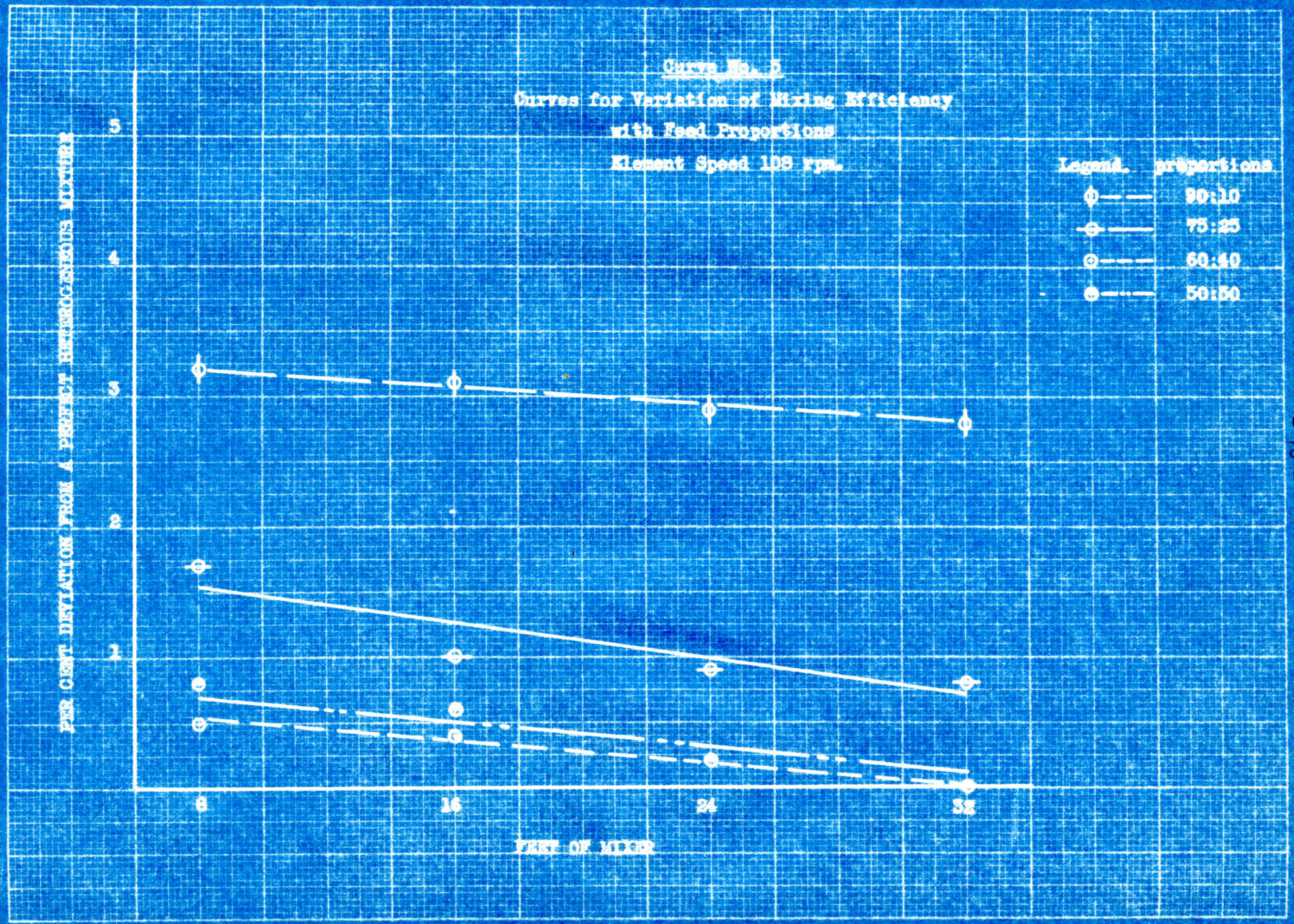
Curve No. 5
Curves for Variation of Mixing Efficiency
with Feed Proportions
Element Speed 108 rpm.
Legend. proportions
90:10
75:25
60:40
50:50
PER CENT DEVIATION FROM A PERFECT HETEROGENEOUS MIXTURE
5
4
3
2
1
8
16
24
32
LENGTH OF MIXER

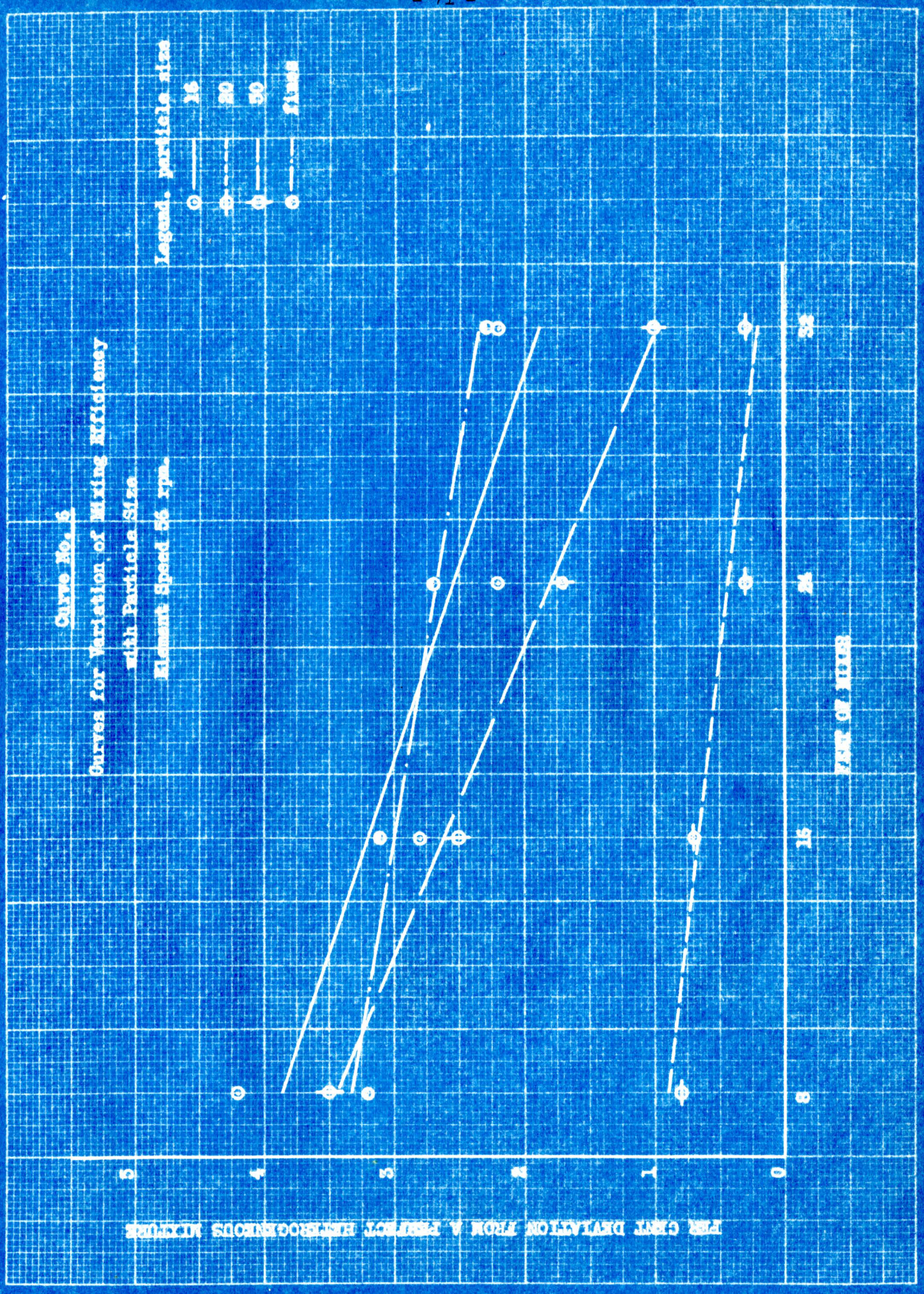
Curve No. 6
Curves for Variation of Mixing Efficiency
with Particle Size.
Element Speed 65 rpm.
Legend. Particle size
16
20
30
fluid
PER CENT DEVIATION FROM A PERFECT HOMOGENEOUS MIXTURE
0
1
2
3
4
5
8
15
24
32
NUMBER OF TESTS

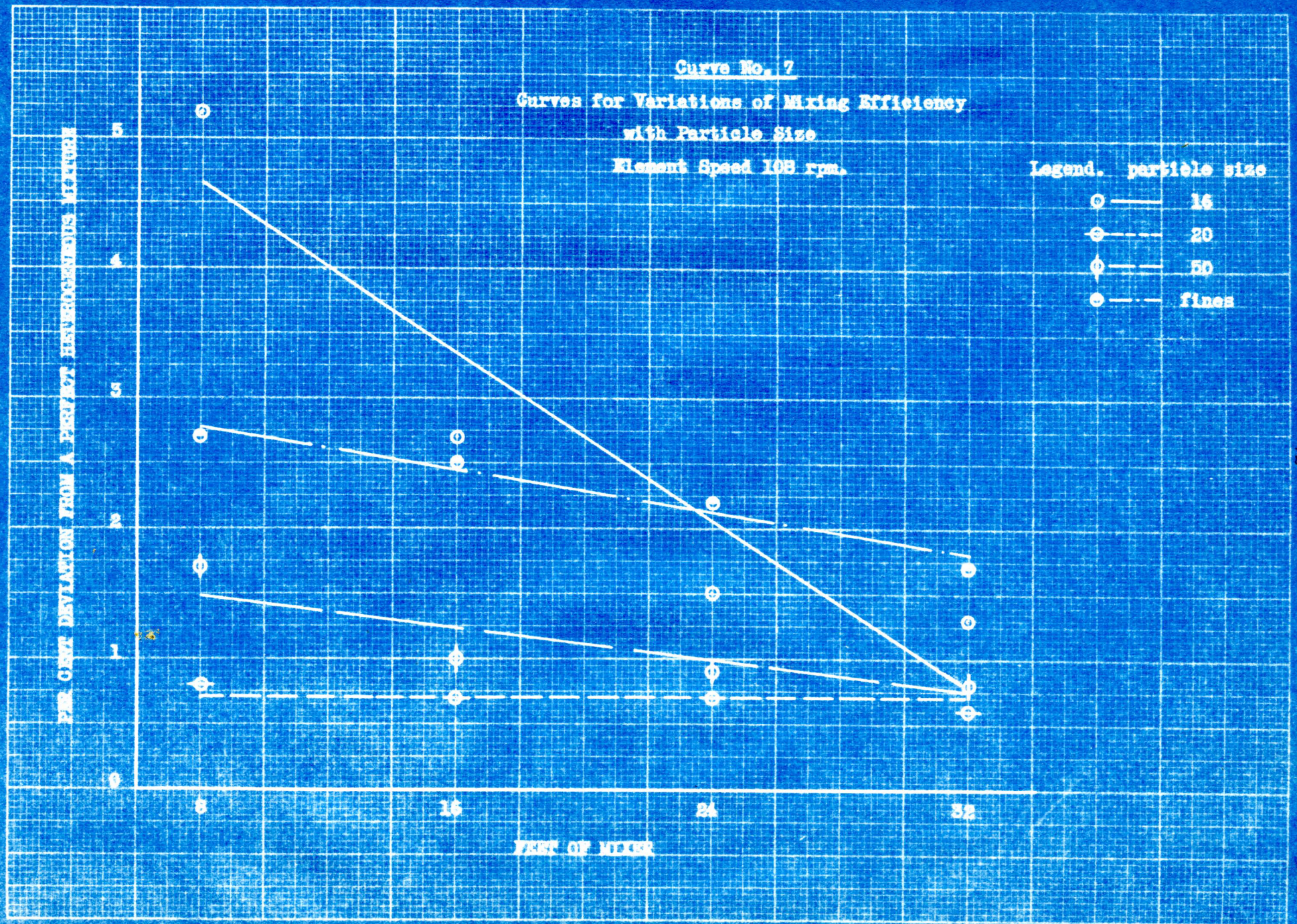
Curve No. 7
Curves for Variations of Mixing Efficiency
with Particle Size
Element Speed 108 rpm.
Legend. particle size
16
20
50
fines
PER CENT DEVIATION FROM A PERFECT HOMOGENEOUS MIXTURE
0
1
2
3
4
5
8
16
24
32
TEST OF MIXER

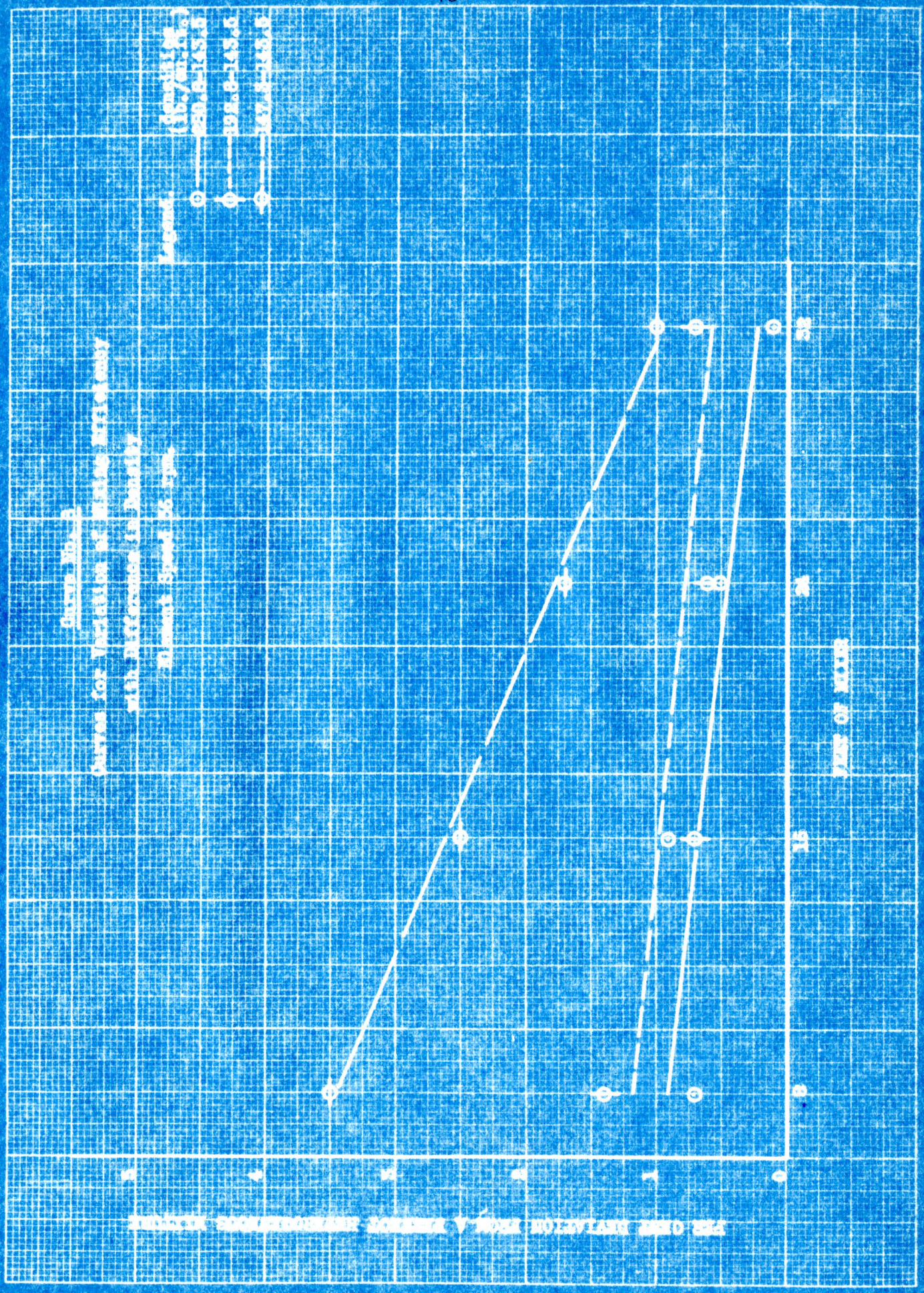

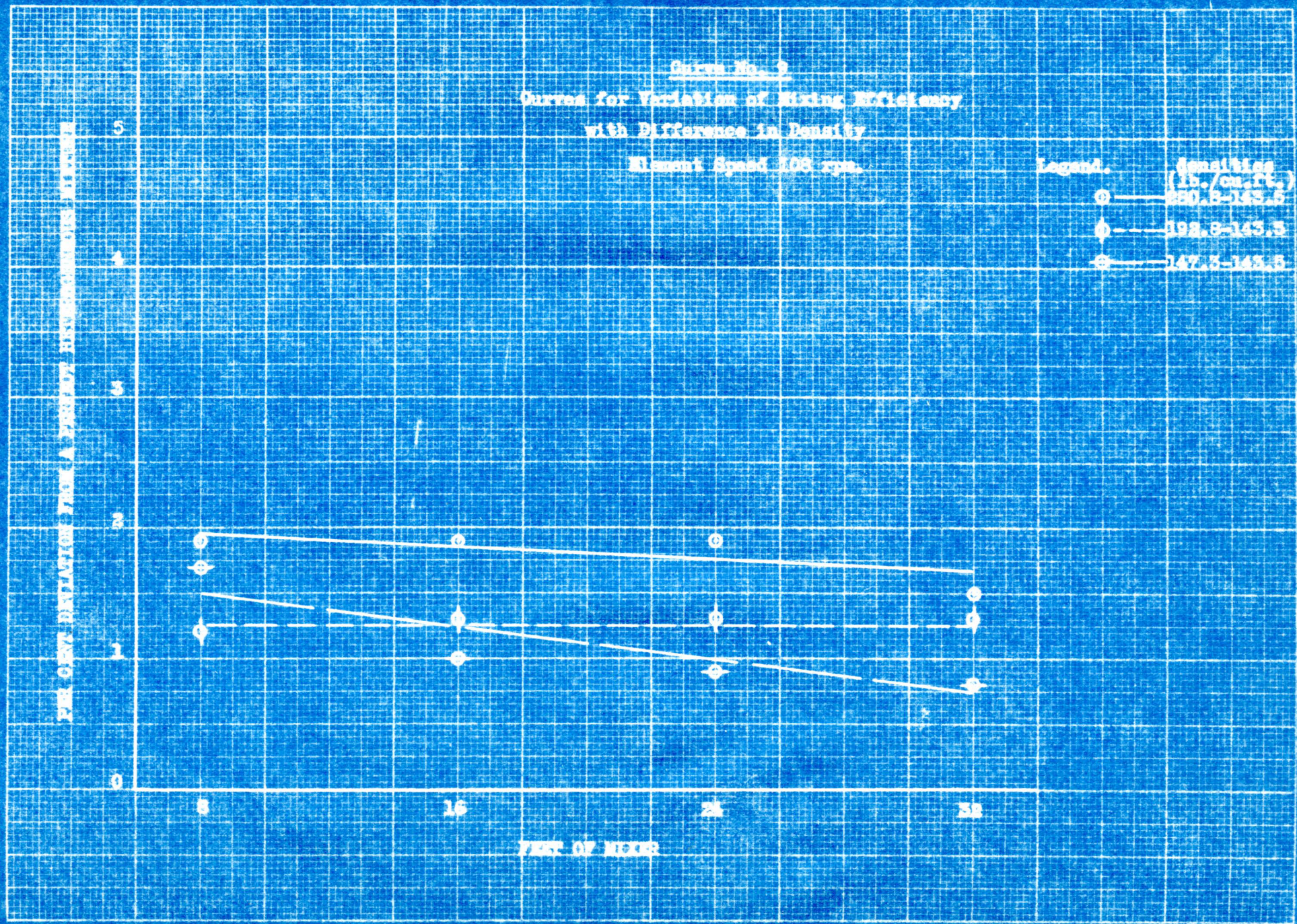
Curve No. 3
Curves for Variation of Mixing Efficiency
with Difference in Density
Element Speed 108 rpm.
Legend.
densities (lb./cu.ft.)
280.8-143.5
198.8-143.5
147.3-143.5
PER CENT DEVIATION FROM A PERFECT MIXING CONDITION
0
1
2
3
4
5
8
16
24
32
FEET OF MIXER

I. Derivation of Mixing Equations

Data: The following is that portion of the data taken which was used in deriving equations applicable within designated limits to show the effect on final mixing efficiency of variations in any one variable factor . The data for variations in feed rate, feed proportions, particle size, and difference in specific gravities of the materials is taken from the run at 108 rpm, since data obtained at the speed was the more conclusive of that taken at the two speeds at which these variables were studied.

Variable	Value	Per Cent Deviation
	rpm	(final)
Speed of Elements	72	3.2
	108	2.8
	144	0.7
	cu.ft./hr.	
Feed Rate	6	2.8
	12	0.0
Feed Proportions	larger % / smaller %	
	9	2.8
	3	0.8
	1.25	0.1
	1	0.0
	mesh	
Particle Size	20	0.6
	50	0.8
	150	1.7
	diff.	
Difference in Specific Gravity	2.2	1.5
	0.79	1.3
	0.06	0.8

Sample Calculations: (Evaluation of constants by method of least squares)

The general equation of the curve for the variation of mixing efficiency with variations in the specific gravity of the materials being mixed may be written as follows:

$$d = a \cdot e^{b \cdot G}$$

Where - a and b = constants
d = % deviation
G = difference in specific gravity
e = 2.72

$$\log d = b \cdot \log_{10} e \cdot G + \log a$$

or

$$y = m \cdot x + c$$

Letting - $y = \log d$
$m = b \cdot \log_{10} e$
$x = G$
$c = \log a$

Let Σ = the summation of a series
δ = the partial integral of

$$\therefore \Sigma P^2 = \Sigma (mx + c - y)^2$$

(1) $\frac{\delta \Sigma}{\delta m} = 2\Sigma (mx + c - y)x = 0$

$\Sigma xy = m\Sigma x^2 + c\Sigma x$

(2) $\frac{\delta \Sigma}{\delta c} = 2\Sigma (mx + c - y)1 = 0$

$m\Sigma x + 3c = \Sigma y$

(1) $5.64m + 3.15\,c = 0.48$

(2) $3.15m + 3c = 0.19$

$m = 0.089$

$c = -0.062$

$a = 0.87$

$0.12 = b \cdot 0.4342$

$b = 0.27$

Table of values:

x	d	log d (y)	x^2	xy
2.2	1.5	0.1761	4.840	0.387
0.89	1.3	0.1139	0.792	0.101
0.06	0.8	-0.0969	0.004	-0.006

Therefore, the final equation of the curve may be written as -

$$d = 0.87 \cdot e^{0.27 \cdot G}$$

Check of equation:	Calculated values	Actual values
	1.6	1.5
	1.1	1.3
	0.9	0.9

Similarly, the following equations were derived for variations in each of the other variable factors. These equations are applicable only within the limits of the data used in their derivation and under the conditions given for each.

Note: In all cases, d = the per cent deviation from a perfect heterogeneous mixture.

I. Speed of Elements.

Holding constant:

1. Density of materials	2.3
2. Particle size (mesh)	50
3. Feed rate (cu.ft./hr.)	6
4. Feed proportions	90:10

$$d = 18.7 \cdot e^{0.021 \cdot S}$$ S = speed in rpm.

II. Feed Rate.

Holding constant:

1. Density of materials	2.3
2. Particle size (mesh)	50
3. Speed of elements (rpm)	108
4. Feed proportions	90:10

$$d = -0.47 \cdot F + 5.6$$ F = feed rate in cu.ft./hr.

III. Feed Proportions.

Holding constant:

1. Density of materials	2.3
2. Particle size (mesh)	50
3. Feed rate (cu.ft./hr.)	6
4. Speed of elements (rpm)	108

$$d = 0.36 \cdot R - 0.37 \qquad R = \frac{\text{Larger \% by weight}}{\text{Smaller \% by weight}}$$

IV. Particle Size.

Holding constant:		
	1. Density of materials	2.3
	2. Speed of elements (rpm)	108
	3. Feed rate (cu.ft./hr.)	6
	4. Feed proportions	75:25

$$d = 0.0085 \cdot P + 0.41 \qquad P = \text{mesh size}$$

IV. DISCUSSION OF RESULTS

Representation of Mixing Efficiency. -- Mixing efficiency may be represented in a number of ways, anyone of which will give the same shape curves as the other. The difference in the weight per cent of insoluble material present in the feed and samples taken during the runs forms the basis for representing mixing efficiency in this investigation. There is a sampling port for every eight feet of mixer and these four points form the abscissa of the curves. The ordinate is the difference between the average weight per cent of the insoluble material in the samples taken at a port and the weight per cent of insoluble material present in the feed.

Variations in Speed of Mixing Elements. -- As might be expected there is a transitional speed where the action of the conveyor mixer changes from one of simple conveying to mixing. This may be attributed to the fact that at low rotational speeds the material is simply scraped along the bottom of the pipe and there is no opportunity for flow back of the material to occur. Since flow back affords the best mixing action, mixing efficiency will be lowest when there is no flow back. As the speed is increased to that at which flow back begins, mixing efficiency was found to be lower than the efficiency at the highest speed at which conveying alone exists. This would tend to indicate that the natural tumbling action occurring at conveying speeds up to 56 rpm. gave better mixing, as shown in Curve No. 1 on page 66, than the higher speeds from 56 to 108 rpm. where flow back of the material was not sufficient to compensate for the decrease in the time required for the material to pass through the mixer. As the speed was increased to 108 and 144 rpm., the efficiency increased and was greatest at 144 rpm. On this

basis, it was felt that to give a more complete picture of the operation of the mixer the effect of the variable factors should be studied at a conveying as well as a mixing speed. Therefore, the remaining tests were duplicated at 56 and 108 rpm.

Variations of Feed Rate. -- At a low feed rate and element speed the mixing is obtained as the result of the tumbling action during conveying. The effect of increasing the feed rate beyond a certain value is the same as would be attained by increasing the element speed to where flow back of material occurred. At the lowest feed rate the amount of material present in the mixer was small enough that it could be mixed by tumbling action alone at either speed. At a feed rate of 6 cubic feet per hour, mixing efficiency was better than for 3 cubic feet per hour at the conveying speed of 56 rpm. This may be attributed to the fact that the material level at this feed rate was sufficient to give some flow back of material as a result of the forward motion of the element when rotating. Hence, the deviations at the two last ports were somewhat less than those at 3 cubic feet per hour. At an element speed of 108 rpm. and a feed rate of 6 cubic feet per hour the slight amount of flow back was sufficient to compensate for the decrease in time of passage of material through the mixer. For a feed rate of 12 cubic feet per hour the mixing efficiencies were approximately the same for both speeds. In this case the flow back at the higher speed was sufficient to compensate for the decrease in time that the material was in the mixer. At the lower speed the flow back of material resulting from the higher level in the mixer plus the additional time required for the material to pass through the mixer resulted in approximately the same effici-

encies of mixing at either speed. The relationship of the curves for the three feed rates at the two speeds may be seen in Curves No. 2 and 3 on page 67 and 68 respectively.

Variations in Feed Proportions. -- At the mixing speed of 108 rpm. the results indicate that increases in the percentage of the soluble material caused subsequent increases in mixing efficiency. Sixty-forty and fifty-fifty proportions of feed by weight were found to have the least deviations from perfect heterogeneous mixtures of the four proportions as shown in Curve No. 5 on page 70. The variations in efficiency at 56 rpm., shown in Curve No. 4 on page 69, followed no definite tendencies relative to feed proportions. However, a feed proportion of 50-50 by weight did show the poorest efficiency of the four proportions used. On the whole, mixing efficiencies were lower at the lower speed indicating that feed proportions exert more effect on mixing when dependent on a tumbling action that when dependent on a flow back of material.

Variations in Particle Size. -- Particle size apparently has the same effect on mixing efficiency at a conveying speed as at a mixing speed. This was indicated by the same relative positions of the curves for various particle sizes at 56 and 108 rpm. as indicated by Curves No. 6 and 7 on pages 71 and 72 respectively. The ideal particle size for use in the mixer seems to be twenty mesh as was shown by better mixing efficiency at this size than at any of the others used. Material sizes larger than twenty mesh and smaller than fifty mesh showed lowest efficiencies of the sizes tested.

Variations in Density of the Materials. -- At 56 rpm., the greater the difference in density the closer the sample analyses approached perfect

mixture proportions as was indicated by the relative positions of the curves in Curve No. 8 on page 73. The natural tendency of the heavier density materials to settle in the bottom of the pipe accounts for the increase in percentage of the insoluble material which was the material of higher density in each case. However, this does not indicate a greater mixing efficiency since these samples definitely did not have the same uniform appearance of dispersion that samples taken during all other runs had. At the higher speed of 108 rpm., shown in Curve No. 9 on page 74, the greater the difference in density of materials the poorer the mixing obtained. The tendency of the conveyor at higher speeds to push the materials up the sides of the pipe and cause flow back, which is highly advantageous to obtaining efficient mixing, also allowed the heavier material to settle out of the mixture. This accounts for the samples having lower percentages of the insoluble material, which was the heavier material, as the difference in density became greater.

Material Retention in the System. -- The average weight of material retained in the system was approximately 1.25 pounds, except when fines or materials of different densities were used; in the latter cases, as may be seen by reference to the data sheet on pages 55 to 63 for these runs, the amount increased to from four to seven times this amount. The cause of this increase is irregularities in the pipe walls which hold the finer material, and the increased weight of the higher density materials which cause them to resist being conveyed and also settle in these crevices.

Sampling. -- At least four samples were taken at each of the four sampling ports except in the runs with fines or materials of widely varying densities. By reference to Tables IV-7, IV-8, V-1 and V-2, it may be seen

that it was possible to take only three samples in these cases. This may be attributed to the sharp increase in the amount of material retained in these instances in the unit for the reasons explained in the preceding paragraph.

V. CONCLUSIONS

1. The screw conveyor mixer with plain flights is an efficient mixer for dry solids under the following conditions:
    a. For speeds above 108 rpm. and below 56 rpm. at feed rates up to 3 cubic feet per hour or for feed rates above 9 cubic feet per hour.
    b. For feed in the size range from 20 to 50 mesh; larger or finer materials give poorer mixing efficiencies.
    c. For speeds of 108 rpm. or above, 50-50 and 60-40 feed proportions by weight give the most efficient mixing; at speeds of 56 rpm. and below the effect of feed proportions is not definitely established.
    d. For speeds of 108 rpm. and above, mixing efficiency varies inversely with the difference in the density of the materials being mixed. At 56 rpm., the reverse is apparently true, but dispersion of the materials in each other is very poor despite the nearness of the weight percentages present to those of the feed.
    e. For feed rates up to 3 cubic feet per hour and above 9 cubic feet per hour at 56 rpm. mixing efficiency is good; this also holds true at the higher speeds of 108 rpm. and above.
2. Size reduction takes place in the mixer when materials in the size range from 16 mesh to four mesh are used. When materials of four mesh are used the crushing action is considerable while the crushing action occurring when 16 mesh material is used is negligible.

3. The major portion of the mixing in the conveyor mixer took place in the first eight feet of the apparatus.

4. The average weight of material retained in the system was constant at approximately 1.25 pounds, except when fines or materials of different densities were used; in the latter cases, the weight increased to from four to seven times this amount.

VI. SUMMARY

A four unit helical conveyor type mixer with cut and folded elements built by L. C. Peery at Virginia Polytechnic Institute in 1939 was tested. Preliminary investigations, made before tests to obtain pertinent data were begun, showed the advisability of straightening these folds. The purpose of this was to prevent all of the mixing action from occurring in the first unit and to show an incomplete picture of the mixer operation. These preliminary investigations also showed the maximum particle size usable in the mixer without obtaining excessive size reduction during mixing. In addition to the above, the investigations showed that in tests where a difference in the density of the materials existed as well as a difference in their crystalline structure, irregularities in the mixing data obtained under these conditions could be attributed more to the difference in density than to the difference in the crystalline structure of the materials. On this basis, tests made on the screw conveyor mixer with the available materials were titled as studies of the effect of a difference in density on mixing.

The first tests on the mixer were made with chert and copper sulfate to determine the effect of speed of elements, feed rate, feed proportions, and particle size on mixing efficiency. These materials were relatively inexpensive and the copper sulfate was readily leached from the samples to form a basis for weight analysis of samples. In the teststo determine the effect of a difference in density on mixing efficiency the materials used were barytes, andalusite and chert with copper sulfate, which is the only soluble material of the four listed.

The procedure followed is as follows: the particle size, density, and weight of the two materials to be used were recorded. These materials were fed into the mixer and at given time intervals samples were taken at the sampling ports and discharge opening. The feed time, time of the run, rpm. of the mixer elements, average time between samples and weight of material in the system were taken. These samples were analyzed and families of curves drawn to show the relationship of variations in the variable factors to mixing efficiency.

Results show that a mixing element speed up to 56 rpm. and above 108 rpm. gave the most efficient mixing with feed rates below three cubic feet per hour and above nine cubic feet per hour. The optimum particle size was in the range from twenty to fifty mesh with feeds of approximately equal percentages by weight of the two materials showing the best mixing efficiency at 108 rpm. At a speed of 56 rpm. the relationship of feed proportions to mixing efficiency was not definitely established. The efficiency of mixing varied inversely with the difference in density at a speed of 108 rpm. and showed the apparent reverse of this at 56 rpm., but dispersion of the materials in each other at this speed was very poor. With materials of 16 mesh size, the size reduction taking place during mixing is negligible, but with materials of 4 mesh size there is an appreciable amount of size reduction taking place. Equations, holding within specified limits and showing the effect of each variable factor on mixing efficiency, were derived.

VII. RECOMMENDATIONS

Variations in Particle Size. -- In future tests the effect on mixing efficiency of mixing particles of sixteen mesh and twenty mesh, sixteen mesh and fifty mesh, and sixteen mesh and fines, as well as the other combinations possible, should be studied. This would more definitely establish the relationship of mixing efficiency to particle size in the conveyor mixer.

Difference in Density of Materials. -- In the tests made in this investigation the heavier density material was always present in the larger percentage. For future tests it would be desirable to study the effect on mixing of having the heavier material present in the smaller percentage.

Crushing Action. -- The crushing action of the mixer should also be studied more closely. Tests should be made to determine if the size of materials used is the only factor affecting this action or if the hardness of the materials has some appreciable effect. The effect of particle shape should also be studied more thoroughly in this connection.

Difference in Crystalline Structure. -- The runs to determine the effect on mixing efficiency of this variable should be made if it is possible to obtain the necessary materials in sufficient quantity.

Feed Proportions. -- It is also suggested that runs at other speeds in the conveying range be made with varying feed proportions. The erratic data obtained at 56 rpm. for tests in which this factor was varied suggests either errors in the testing or some other factor coming into play at this speed.

VIII. BIBLIOGRAPHY

1. Badger, W.L. and McCabe, W.L. "Elements of Chemical Engineering!" p. 511. McGraw-Hill Book Co., New York. 1936.

2. Bates, W.R. and Walker, H.R.L. The Conveyor and Its Application to Mixing and Other Processes. Journal of the Society of Chemistry and Industry, 38, 62A (1919).

3. Bergman, R.F. Rational Method of Selecting Screw Conveyors. Chem. and Met. Eng., 41, 470 (1934).

4. Editoral. Mixing Advances Despite Empirical Status. Chem. and Met. Eng., 40, 266, (1933).

5. Equipment News. Triplex Dry Blender. Chem. and Met. Eng., 46, 237, (1939).

6. Fox, E.J. and Turrentine, J.W. Potassium Sulfate. Ind. and Eng. Chem., 26, 495, (1934).

7. Gunness, R.C. and Baker, J.G. Performance of Mixing Equipment. Ind. and Eng. Chem., 30, 497, (1938).

8. Headley, T.B. U.S. Patent No. 1,246,003. Journal of the Society of Chem. and Ind., 37, 2A, (1918).

9. Hixon, A.W. and Tenney, A.H. Quantitative Evaluation of Mixing as the Result of Agitation in the Liquid-Solid System. Transactions of A.I.Ch.E., 31, 113, (1935).

10. Hixon, H.W. and Crowell, W.F. Dependence of Reaction Velocity upon Surface and Agitation. Ind. Eng. Chem., 23, 923, (1931).

11. Killeffer, D.H. Tools of the Chemical Engineer--I-Agitators. Ind. and Eng. Chem., 15, 144. (1923).

12. Kleinfeldt, H.F. Pebble or Ball Mills for Mixing and Grinding. Chem. and Met., 29, 436, (1923).

13. Link Belt Company, Chicago, Illinois. General Catalog No. 700. pp. 870-967.

14. MacMullen, R.B. and Weber, M., Jr. The Theory of Short-Circuiting in Continuous Flow Mixing Vessels in Series and the Kinetics of Chemical Reactions in Such Systems. Transactionsof A.I.Ch.E., 32, 409, (1935).

15. Olive, T.R. A New Classification of Unit Operations. Chem. and Met. Eng., 41, 229, (1934).

16. Perry, J.H. (Editor) "Chemical Engineers Handbook". Section 14, p. 1267; Section 20, p. 1845. McGraw-Hill Book Co., New York, (1934).

17. Peery, L.C. The Design, Construction, and Operation of a Continuous Screw Conveyor Type Mixer and Crystallizer. Unpublished Thesis. Library, Virginia Polytechnic Institute. Blacksburg, Virginia. 1939.

18. Tyler, Clifford H. Equipment Used for Agitating and Stirring. Chem. and Met Eng., 29, 441, (1923).

19. Valentine, K.S. Program for Mixing Study. Chem. and Met. Eng., 45, 244, (1938).

20. Valentine, K.S. and MacLean, G. Mixing and Agitation. Chem. and Met. Eng., 42, 220, (1935).

21. Valentine, K.S. and MacLean, G. Mixing and Agitation. Chem. and Met. Eng., 41, 237, (1934).

22. White, Brenner, Phillips, and Morrison. Studies in Agitation. Transactions of A.I.Ch.E., 30, 570-584, (1934).

23. White, A. McLean and Brenner, E. Studies in Agitation. Transactions of A.I.Ch.E., 30, 585-597, (1934).

24. White, A. McLean, Summerford, S.D., Bryant, E.O. and Lukens, B.E. Studies in Agitation. Ind. and Eng. Chem., 24, 1160, (1932).

25. White, A. McLean and Summerford, S.D. Studies in Agitation. Ind. and Eng. Chem., 26, 82, (1934).

26. White, A. McLean and Summerford, S.D. New Data on the Design of Simple Paddle Agitators. Chem. and Met. Eng., 43, 370, (1936).

IX. ACKNOWLEDGMENTS

The author of this thesis wishes to take this opportunity to express his appreciation to Dr. Frank C. Vilbrandt for suggesting this problem and for his help and guidance, without which the investigation would have been impossible.

Gratitude is also expressed for the aid given by
in conducting the experimental portion of the investigation.