Nonlinear Finite Element Analysis of a Laminated Composite Plate with Nonuniform Transient Thermal Loading

by

Thomas Harris Fronk

Thesis submitted to the Faculty of the

Virginia Polytechnic Institute and State University

in partial fulfillment of the requirements for the degree of

Master of Science

APPROVED:

Dr. J. R. Mahan, Chairman

Dr. C. E. Knight

Dr. J. B. Kosmatka

March 25, 1988

Blacksburg, Virginia

LD
5655
V855
1988
F165
c.2

Nonlinear Finite Element Analysis of a Laminated Composite Plate with Nonuniform Transient Thermal Loading

by

Thomas Harris Fronk

Dr. J. R. Mahan, Chairman

(ABSTRACT)

Metal plates are being replaced by lighter but equally strong laminated composite plates in order to improve efficiency and increase performance of aerospace vehicles. But because of the complex construction of laminated plates they are very difficult to analyze. Conventional thin plate theories prove to be inadequate in predicting laminated composite plate behavior. Therefore, a finite element model which incorporates a first-order shear-deformation theory and nonlinear von Karman strains is described. The model is shown to accurately predict deflections in laminated composite plates due to nonuniform transient heat fluxes and transverse mechanical loads.

Acknowledgements

I would like to thank my adviser Dr. J.R. Mahan for his constant help and advice. Also I appreciate the advice and time given to me by the members of my committee, Dr. C.E. Knight, and Dr. J.B. Kosmatka. A special thanks goes to NASA Langley and Dr. John S. Mixson for their funding of this project under contract NAS1-18471, Task 3. I am indebted to my parents, brothers, and sisters for their example and encouragement. And most of all I thank my wife Monica and two sons Alexander and Aaron. Without their support it would not have been possible.

Table of Contents

1. Introduction **1**

2. Laminated Plate Analysis **6**

2.1. Laminate Definition 6

2.2. Classical Lamination Theory (CLT) 7

2.3. Shear-Deformation Theory (SDT) 9

3. Lamina Stresses, Strains, and Displacements **12**

3.1. Lamina Stress-Strain Relations 12

3.2. Strain-Displacement Relations 20

4. Governing Equations for Laminated Plates **24**

4.1. Laminate Forces and Moments 24

4.2. Thermal Forces and Moments 27

4.3. Equations of Motion 33

5. Finite Element Model **37**

5.1. Variational Formulation 37

5.2. Interpolation and Approximate Functions 45

5.3. Gauss-Legendre Quadrature and Reduced Integration 54

5.4. The Transient Solution (Newmark Method) 58

5.5. Newton-Raphson Method 60

6. Verification of Model and Results 63

6.1. Static Mechanical Load 64

6.2. Linear Temperature Variation Through an Isotropic Plate 66

6.3. Transient Mechanical Load 67

6.4. Transient Thermal Load 68

7. Conclusions and Recommendations 70

References 88

Appendix A. COMMEC2 PROGRAM LISTING 92

Vita 109

List of Illustrations

Fig. 1. Typical Laminated Composite Plate. 71

Fig. 2. Plate Element with Seven Degrees of FreedoT, three Translations and Four Rotations. 72

Fig. 3. (a) Undeformed Laminated Composite Plate (b) Deformed Laminated Plate with CLT Displacement Field (c) Deformed Laminated Plate with First-Order SDT Displacement Field. 73

Fig. 4. (a) Forces on the Laminated Plate (b) Moments on the Laminated Plate. . 74

Fig. 5. Laminate Coordinate System and Nomenclature. 75

Fig. 6. Typical Infinitesimal Cube of Laminated Composite Plate. 76

Fig. 7. Master Element for (a) 4-Node Rectangular (b) 8-Node Rectangular, and (c) 9-Node Rectangular Elements. 77

Fig. 8. Finite Element Mesh used in the Plate Analysis, Four 9-Node Quadrilateral Elements. 78

Fig. 9. Geometry and Boundary Conditions of the First Quadrant of a Simply-Supported Square Plate. 79

Fig. 10. Normalized Center Deflection of a Simply-Supported Isotropic Plate Under a Uniformly-Distributed Transverse Load. 80

Fig. 11. Geometry and Boundary Conditions of the First Quadrant of a Clamped Symmetric Cross-Ply [0/90/90/0] Laminated Composite Plate. 81

Fig. 12. Center Deflection of a Clamped Symmetric Cross-Ply [0/90/90/0] Laminate Subjected to a Uniform Transverse Load (a = 4.72 cm (12 in.), h = 0.038cm (0.096 in.)). 82

Fig. 13. Normalized Deflection of a Simply-Supported Isotropic Plate Subjected to a Linear Temperature Distribution. 83

Fig. 14. Evolution of Center Deflection with Time for a Simply-Supported Isotropic Square Plate Under a a Uniform Load of 100 kPa (a = 25.0 cm, h = 5.0 cm). 84

Fig. 15. Evolution of Center Deflection with Time for a [0/90/0] Simply-Supported Laminated Composite Plate Under a Uniform Load of 100 kPa (a = 25.0 cm, h = 5.0 cm). 85

Fig. 16. Geometry and Boundary Conditions of the First Quadrant of a Simply-Supported Cross-Ply [0/90/90/0] Laminated Composite Plate (a = 2.0 cm, h = 0.5 cm). 86

Fig. 17. Evolution of Center Deflection with Time for a Simply-Supported [0/90/90/0] Laminated Composite Plate Subjected to a Nonuniform Heat Flux (a = 2.0 cm, h = 0.5 cm). 87

1. Introduction

The need for a strong yet light-weight structural material has evolved with the evolution of aerospace vehicles. Many missiles, aircraft, and even the space shuttle now use parts made of composite materials which have large strength-to-weight and stiffness-to-weight ratios. One of the most popular forms of composite material is the laminated plate. Several layers of unidirectional aligned fibers bound with resin, called *laminae*, are bonded together to form a solid plate, called a *laminate*. The individual laminae are oriented in certain directions giving the laminate the necessary strength and stiffness in the directions of the anticipated loads. A typical laminated plate is shown in Fig. 1. A laminated composite plate is an *orthotropic*, *nonhomogenous* material. Orthotropic means the material properties are directional dependent with three orthogonal planes of material property symmetry and nonhomogenous means the material properties are location dependent. Because of their orthotropy and nonhomogenity, many complications and complexities arise in the analysis and description of laminated composites that do not exist with conventional isotropic, homogenous materials. These include coupling between bending and extension, bending and twisting, and shear and extension.

The National Aeronautics and Space Administration (NASA) is currently studying the interaction of thermal stress and sonic fatigue in laminated composite structures of the proposed U.S. - U.K. advanced short take-off and vertical landing (ASTOVL) aircraft [1]. If the aft fuselage and thrust redirection and lifting surfaces of the ASTOVL can be made of laminated composites, a substantial weight savings will be gained. However, the engine exhaust causes high levels of acoustic radiation and heat flux to impinge on these structures. Although composite materials are said to have an almost infinite fatigue life [2], the extent of damage caused by the coupling of acoustically-induced vibration with thermally-induced stress is still unknown. Given the complex nature of composite materials, it is unlikely that their behavior can be predicted only on the basis of experience with isotropic materials. A finite element model of a laminated composite plate, developed in this thesis, is shown to accurately and economically predict the deflections caused by transient thermally-induced loads. This is the necessary first step in the development of a finite element model capable of describing the thermoacoustic response of fiber-reinforced composite materials.

The science of analyzing and designing laminated composite components has received significant attention only in the last twenty to thirty years. In the 1950's and 60's an increased interest arose in developing elasticity theories for plates that are nonhomogeneous and anisotropic. Stavsky and Reissner [3] established the elastostatic bending and stretching theory for nonhomogenous plates based on the Euler-Bernoulli hypothesis and the classical Kirchoff hypothesis. This evolved into what is now called the classical plate theory (CPT). Classical lamination theory (CLT) is an extension of CPT to laminated composite plates. Classical lamination theory is generally accepted and widely used to predict laminated composite plate response and in designing components made of laminated composites. Classical lamination theory is relatively easy to use because it employs several simplifying assumptions discussed in Chapter 2.

However, many researchers have recognized the inadequacies and limitations of classical lamination theory. In 1969, Pagano published a series of papers [4,5,6] in which the deficiencies of classical lamination theory are exposed and explained. One of the most limiting consequences of the CLT assumptions is that accurate predictions are obtained only when the plate has a high span-to-depth ratio and deflections are small. Therefore, CLT is really only a thin plate approximation of laminated composite plates.

The varying material properties of laminated plates make it impossible to set a specific thickness where CLT yields valid results. Hence, many have attempted to account for thickness effects by including shear-deformation terms. The Mindlin plate theory [7] includes tranverse shear effects and, therefore, has served as the basis for developing theories which account for deformation caused by shear. Stravsky [8] was the first to propose shear deformation theory as a solution to analyze laminated isotropic plates. Later, Yang, Norris, and Stavsky [9] generalized the shear deformation theory to include laminated anisotropic heterogenous plates. Whitney and Pagano [10] applied the theory of Yang, Norris, and Stavsky (YNS) to bending of antisymmetric cross-ply and angle-ply plate strips under sinusoidal load distribution and free vibration of antisymmetric angle-ply strips and reported good results. Reissner [11], Lo, Christensen and Wu [12], and Librescu [13] have all developed higher-order shear-deformation theories to predict the response of laminated composites. Each one of these has included shear deformation effects and consequently led to improved accuracy of their predictions over that afforded by the traditional CLT results (e.g. Dong, Pister, and Taylor [14], and Bert and Mayberry [15]). Of great importance to the research of this thesis is the work done by Reddy and Nsu [16]. They used the YNS theory to evaluate the effects of shear deformation and anisotropy on the thermal bending of layered composite plates. Recently, Mei and Prasad [17] investigated the influence of large deflection and transverse shear

on rectangular symmetric laminated composite plates due to acoustic loads. They They found that for thick plates the effects due to shear deformation are considerable.

The finite element method has been used extensively to analyze isotropic plates, but less effort has gone into the investigation of laminated composite plates. Thick laminated plates have been analyzed by Pryor and Barker [18], and Barker, Lin, and Dara [19] using the conventional displacement finite element method. A plate element with seven degrees of freedom per node (three displacements, two rotations, and two shear rotations as shown in Fig. 2) was used. Implementing an element with 80 degrees of freedom, Noor and Mathers [20] developed a finite element model based on Reissner's plate theory. They were able to study the effects of shear deformation on the accuracy of several models. While these models are very accurate they are also computationally very demanding. Models of plate elements with five degrees of freedom (three displacements, two rotations) have been formulated by Yang, Norris, and Stravsky [9] and Reddy [21,22]. They show that in most cases the use of only five degrees of freedom proves sufficiently accurate. Reddy [23] has improved the accuracy of the predictions of the finite element model incorporating the method of reduced integration on the shear deformation terms as proposed by Zienkiewicz, Taylor, and Too [24].

The problem of thermally-induced stress in nonhomogenous materials was first addressed by Pell [25], Sharma [26], and Nowacki [27]. Later Sugano [28] studied the effects of transient thermal stresses in transverse isotropic cylinders. The thermal stress problem was expanded to include orthotropic laminated plates by Tauchert and Akoz [29]. However, this was only a steady-state solution. Most recently Wang, and Chou [30] present a solution of transient thermal stresses in thermally and elastically orthotropic two-dimensional materials based on a displacement-potential approach.

The previous work cited above has provided the basis for the nonlinear transient finite element model developed in this thesis. The model is nonlinear in the sense that

the in-plane strain-displacement relationships include the square of the transverse deflection; i.e. the von Karman strains are implemented. The model is capable of accurately and economically predicting the dynamic behavior of the laminated composite components of the type proposed for use in the ASTOVL aircraft, and is capable of examining the effects of imposed three-dimensional, transient temperature fields while accounting for the nonlinear shear deformation terms with the use of reduced integration. The temperature field is restricted to the semicoupled case in which the heat generated by the kinetic behavior of the plate is assumed to be negligible. This assumption has been extensively validated by Jia [31]. To the author's knowledge, the finite element model in this thesis is unique in its accuracy, versatility and low computational demand. The goals of the work described in this thesis are, first, to formulate the finite element model just described and, second, to demonstrate its capabilities by considering the transient, three-dimensional thermoelastic response of a laminated plate.

2. Laminated Plate Analysis

The purpose of this chapter is to describe the components of a laminated composite plate and to develop the theories used in laminated composite plate analysis. One of the most prevalent lamination theories, *classical lamination theory* (CLT), is described and shown to be inadequate for the application envisioned in this thesis. Other theories which assume higher-order displacement fields and include shear deformation effects are discussed. Finally, a first-order theory which does not rely on Kirchoff's assumption is shown to be the most suitable for the application of this thesis.

2.1. Laminate Definition

Consider a composite laminated plate of thickness h and width a as shown in Fig. 1. Throughout this thesis the laminate orientation will be referred to a global x, y, z system of Cartesian coordinates. The x-y plane of the coordinate system is the midplane of the plate and the z-axis is normal to the midplane. The top of the plate, therefore,

will be located at $z = +h/2$ and the bottom at $z = -h/2$. The principal material axes of an individual lamina are aligned parallel to the direction of the unidirectional fibers in each case. The angle between the laminate x-axis and the principal material axis is referred to as the angle of rotation and is denoted by θ in Fig. 1. The angle of rotation is positive in the clockwise direction.

Each layer is assumed to be orthotropic and homogeneous. Orthotropic means the lamina has three planes of geometric and material property symmetry. The orthotropic assumption is made with little or no error. There are many methods and theories for mathematically deriving orthotropic material properties of a heterogenous lamina. However, these methods are tedious and rarely more accurate than empirical characterizations of the material properties [3]. Therefore, for this analysis no micromechanical calculations are performed. The lamina properties are assumed to be known and homogenous throughout each lamina.

2.2. Classical Lamination Theory (CLT)

Classical lamination theory (CLT) is the prevalent analysis and design tool of laminated composite plates because of its relative simplicity compared to three-dimensional theory. The assumptions made in classical lamination theory are listed below along with the direct implication of each assumption.

1. **Assumption:** Plane sections originally plane and perpendicular to the middle surface remain plane and perpendicular to the middle surface after extension and bending.
   Implication: The deflection of the plate is associated only with the bending strains. The shear strains ε_{zx} and ε_{yz} are neglected.

2. **Assumption:** The displacements of the middle surface are small compared with the thickness of the plate.

   Implication: The slope of the deflected surface is small compared to the in-plane strains and the square of the slope is negligible; i.e., linear strain-displacement relations are valid, and the influence of in-plane forces upon the transverse deflection may be ignored.

3. **Assumption:** The thickness of the plate is small compared with other dimensions of the plate.

   Implication: The plate is in a state of plane stress. $\sigma_z = \tau_{xz} = \tau_{yz} = 0$.

4. **Assumption:** The laminate consists of perfectly bonded laminae and the bonds are infinitesimally thin as well as nonshear-deformable.

   Implication: There is no possibility of delamination since laminae cannot slip with respect to each other.

5. **Assumption:** The plate is constructed of linearly-elastic material with properties that are independent of temperature.

   Implication: Hooke's law is applicable.

Although these assumptions simplify the analysis and design of composite materials, the implications often cause erroneous results. Pagano and his associates in a series of papers [4,5,6] show that CLT predictions are reasonable only in the case of relatively thin plates. This is because of:

1. the neglect of shear deformation terms, implied by the Kirchoff hypothesis (normals remain normal)

2. the assumption of linear in-plane displacements through the thickness

3. the presence of only two boundary conditions per edge in the bending theory

4. the assumption of a state of plane stress which eliminates the possibility of interlaminar stress calculations.

Research has been done to eliminate some of the restricting assumptions of CLT and still maintain the computational simplicity of plate theory. Shear-deformation theories (SDT) are a result of this research.

2.3. Shear-Deformation Theory (SDT)

The Kirchoff restriction is unnecessary in shear-deformation theories and, therefore, they are a compromise between the accuracy of three-dimensional theory and the simplicity of plate theory. Shear-deformation theories can be grouped into either stress-based or displacement-based theories. Reissner [32] is responsible for the first stress-based SDT and Basset [33] is one of the first to develop a shear deformation theory based on displacements. The theory developed in this thesis is also a displacement-based theory. Basset assumes that displacements can be expanded in power series of the z-coordinate. For example, the displacement in the x-coordinate is written

$$u(x, y, z) = u^{\circ}(x, y) + \sum_{n=1}^{N} z^n \, \psi_x^n(x, y) \, , \tag{2.1}$$

where u° is the middle surface displacement in the x-direction and $\psi_x^{(n)}$ means

$$\psi_x^{(n)}(x, y) = \left.\frac{\partial^n u}{\partial z^n}\right|_{z=0}, \qquad n = 1, 2, \ldots \qquad . \tag{2.2}$$

A similar expression can be written for the displacement in the y-coordinate. The quantities ψ_x and ψ_y have a physical significance when $n = 1$ as the slope of the deflected surface. A special case of Basset's displacement field is the first-order shear-deformation theory. The first-order SDT assumes the following displacement field

$$u(x, y, z) = u^\circ(x, y) + z\psi_x(x, y),$$

$$v(x, y, z) = v^\circ(x, y) + z\psi_y(x, y), \tag{2.3}$$

and

$$w(x, y, z) = w^\circ(x, y).$$

The displacement fields assumed by the first-order SDT and CLT are similar in that they both assume a linear through-the-thickness displacement field. However, in the first-order SDT transverse displacements are allowed to rotate and are not necessarily perpendicular to the middle surface after bending or extension. Figure 3 shows a graphical comparison of the displacement field assumed by the first-order SDT and the displacement field assumed in CLT because of the Kirchoff-Love hypothesis. Figure 3(a) shows an undeformed laminate, and the deformed laminate with the displacement field assumed by CLT is shown in Fig. 3(b). Notice in Fig. 3(b) that the solid line depicting the displacement field is still normal to the middle surface. The solid line shown in Fig. 3(c) is a typical first-order SDT displacement field and is not necessarily normal to the middle surface.

Another observation about the first-order SDT is that the shear strains are assumed uniform through the thickness of the plate. In general this assumption is incorrect and for this reason Mindlin [7] introduced a shear correction factor, k^2. The shear correction factor is evaluated by comparing solutions with an exact elasticity solution. For the materials most commonly used in laminated composite plates $k^2 = \frac{5}{6}$. This factor is multiplied by the shear moduli G_{23}, and G_{31}.

In 1969 Yang, Norris, and Stravsky [9] assumed the displacement field of the first-order SDT in order to investigate elastic wave propagation in heterogenous plates and found good agreement with the exact solution. Later Gol'denveizer [34], Schmidt [35], Whitney and Pagano [10], Librescu [13], and Lo, Christensen, and Wu [12] independently included higher order terms in Basset's power series assumption to describe the displacement fields. Reddy and his associates [22] have refined a higher-order theory that is extremely accurate and yet somewhat less cumbersome and computationally less demanding than the three-dimensional elastic theory. However, even this refined higher-order theory is substantially more cumbersome than the first-order SDT. In chapter 3 the nonlinear deflections are introduced. By including the nonlinear deflections it becomes even more computationally cumbersome to include the higher-order shear deformation theories. Therefore, it is assumed in the present work that the first-order theory is sufficiently accurate and the displacement field of Eq. (2.3) is used as the basis for defining the strains. Thus only five degrees of freedom are considered: u, v, w, ψ_x, and ψ_y.

3. Lamina Stresses, Strains, and Displacements

Stress-strain relations for an orthotropic lamina are reviewed in this chapter. Starting with the generalized Hooke's law for an elastic solid, the stress-strain relations are reduced to the three-dimensional orthotropic form using contracted notation. The stiffness matrix is transformed so that the on-axis stresses and strains can be found for a lamina with arbitrary orientation of the principal material direction. The stiffness matrix is further reduced to exclude σ_z and ε_z. Finally, the nonlinear strain-displacement relations are derived.

3.1. Lamina Stress-Strain Relations

The generalized Hooke's law for an elastic solid in indicial notation is expressed

$$\sigma_{ij} = C_{ijkl}\,\varepsilon_{kl}\,, \tag{3.1}$$

where σ_{ij} is the stress tensor C_{ijkl} is the stiffness tensor and ε_{kl} is the strain tensor. It is assumed in this relationship that there are no residual stresses from previous defor-

mations. With this assumption the generalized Hooke's law is the most general form of a linear relationship between the stress and strain components. In this general form C_{ijkl} represents 81 independent material constants. From equilibrium conditions it can be shown that, if there are no body moments, the σ_{ij} tensor is symmetric ($\sigma_{ij} = \sigma_{ji}$). And by definition of the strain tensor from the Eulerian viewpoint (see Eq. (3.18)), it can be concluded that the strain tensor ε_{kl} is symmetric. Since σ_{ij} and ε_{ij} are symmetric, it follows that C_{ijkl} is symmetric. The independent constants are now reduced to 36 and so contracted notation can be employed to simplify the expression for Hooke's law to

$$\sigma_i = C_{ij}\varepsilon_j \,. \tag{3.2}$$

Contracted notation is a simplification of indicial notation that reduces the number of indices by one-half. The indices are replaced as follows:

$$11 \rightarrow 1\,, \quad 22 \rightarrow 2\,, \quad 33 \rightarrow 3\,,$$

$$23 \rightarrow 4\,, \quad 31 \rightarrow 5\,, \quad 12 \rightarrow 6\,.$$

For example, $\sigma_{11} \rightarrow \sigma_1$, $\varepsilon_{23} \rightarrow \varepsilon_4$, and $C_{3112} \rightarrow C_{56}$. The number of independent elastic constants is further reduced to 21 by recognizing that there exists a quadratic strain energy function W such that

$$W = \frac{1}{2}\, C_{ij}\, \varepsilon_i\, \varepsilon_j \,. \tag{3.3}$$

Therefore C_{ij} is symmetric.

In Chapter 2 the lamina was assumed to be orthotropic. This implies that there are three planes of geometric and material symmetry. By systematically equating terms from symmetric coordinate systems it can be shown that the number of independent material

constants can be reduced to nine and that the generalized Hooke's law in matrix form for an individual lamina can now be written [3]

$$\begin{bmatrix} \sigma_1 \\ \sigma_2 \\ \sigma_3 \\ \sigma_4 \\ \sigma_5 \\ \sigma_6 \end{bmatrix} = \begin{bmatrix} C_{11} & C_{12} & C_{13} & 0 & 0 & 0 \\ C_{12} & C_{22} & C_{23} & 0 & 0 & 0 \\ C_{13} & C_{23} & C_{33} & 0 & 0 & 0 \\ 0 & 0 & 0 & C_{44} & 0 & 0 \\ 0 & 0 & 0 & 0 & C_{55} & 0 \\ 0 & 0 & 0 & 0 & 0 & C_{66} \end{bmatrix} \begin{bmatrix} \varepsilon_1 \\ \varepsilon_2 \\ \varepsilon_3 \\ \varepsilon_4 \\ \varepsilon_5 \\ \varepsilon_6 \end{bmatrix} . \tag{3.4}$$

By inverting the stiffness matrix $[C_{ij}]$, the compliance matrix $[S_{ij}]$, can be found along with the strain-stress relationship

$$\begin{bmatrix} \varepsilon_1 \\ \varepsilon_2 \\ \varepsilon_3 \\ \varepsilon_4 \\ \varepsilon_5 \\ \varepsilon_6 \end{bmatrix} = \begin{bmatrix} S_{11} & S_{12} & S_{13} & 0 & 0 & 0 \\ S_{12} & S_{22} & S_{23} & 0 & 0 & 0 \\ S_{13} & S_{23} & S_{33} & 0 & 0 & 0 \\ 0 & 0 & 0 & S_{44} & 0 & 0 \\ 0 & 0 & 0 & 0 & S_{55} & 0 \\ 0 & 0 & 0 & 0 & 0 & S_{66} \end{bmatrix} \begin{bmatrix} \sigma_1 \\ \sigma_2 \\ \sigma_3 \\ \sigma_4 \\ \sigma_5 \\ \sigma_6 \end{bmatrix} . \tag{3.5}$$

From the strain-stress relationship, the compliance terms can be logically deduced in terms of engineering constants [3] :

$$
[S] = \begin{bmatrix}
\frac{1}{E_1} & \frac{-\nu_{21}}{E_2} & \frac{-\nu_{31}}{E_3} & 0 & 0 & 0 \\
\frac{-\nu_{12}}{E_1} & \frac{1}{E_2} & \frac{-\nu_{32}}{E_3} & 0 & 0 & 0 \\
\frac{-\nu_{13}}{E_1} & \frac{-\nu_{23}}{E_2} & \frac{1}{E_3} & 0 & 0 & 0 \\
0 & 0 & 0 & \frac{1}{G_{23}} & 0 & 0 \\
0 & 0 & 0 & 0 & \frac{1}{G_{31}} & 0 \\
0 & 0 & 0 & 0 & 0 & \frac{1}{G_{12}}
\end{bmatrix} , \tag{3.6}
$$

where E_i are the Young's moduli in the i-direction, ν_{ij} are the Poisson's ratios for strain in the j direction resulting from stress in the i direction, and G_{ij} are the Shear moduli in the i-j plane. Recall from Chapter 2 that the shear moduli G_{23} and G_{13} can now be reduced by the shear correction factor, k^2. Although twelve material constants appear in Eqs. (3.6), there are only nine independent constants because

$$
\frac{\nu_{ij}}{E_i} = \frac{\nu_{ji}}{E_j} \quad , \quad i = 1,2,3 \ , \quad j = 1,2,3 \ . \tag{3.7}
$$

The stress-strain relations of Eqs. (3.4) are true only when the stresses and strains are in the principal material direction of the lamina (direction in which the fibers are aligned). When the various principal axes of the laminae are in different directions it becomes difficult to analyze the laminate. This necessitates a method of transforming

the stress-strain relations from one coordinate system to another. Consider a lamina whose principal material direction is at some angle θ with respect to the laminate x-axis. In tensor notation the stresses in the x-y coordinate system (σ_{ij}), are transformed to the 1-2 coordinate system (σ'_{ij}), by [36]

$$\sigma'_{ij} = a_{li}\, a_{mj}\, \sigma_{lm}\,, \tag{3.8}$$

where

$$[a_{ij}] = \begin{bmatrix} \cos\theta & -\sin\theta & 0 \\ \sin\theta & \cos\theta & 0 \\ 0 & 0 & 1 \end{bmatrix}.$$

This yields

$$\begin{bmatrix} \sigma_1 \\ \sigma_2 \\ \sigma_3 \\ \tau_{23} \\ \tau_{31} \\ \tau_{12} \end{bmatrix} = \begin{bmatrix} c^2 & c^2 & 0 & 0 & 0 & 2cs \\ s^2 & s^2 & 0 & 0 & 0 & -2cs \\ 0 & 0 & 1 & 0 & 0 & 0 \\ 0 & 0 & 0 & c & -s & 0 \\ 0 & 0 & 0 & s & c & 0 \\ -cs & cs & 0 & 0 & 0 & c^2 - s^2 \end{bmatrix} \begin{bmatrix} \sigma_x \\ \sigma_y \\ \sigma_z \\ \tau_{yz} \\ \tau_{zx} \\ \tau_{xy} \end{bmatrix}, \tag{3.9}$$

where now

$$c = \cos\theta \quad \text{and} \quad s = \sin\theta\,.$$

In this thesis the transformation matrix of Eq. (3.9) is represented by the symbol $[T_1]$. Tensorial strains are transformed in the same way; however, tensorial strains and engi-

neering strains are not equal. Tensorial shear strains are one-half of engineering strains. Thus,

$$\begin{bmatrix} \varepsilon_1 \\ \varepsilon_2 \\ \varepsilon_3 \\ \gamma_{23} \\ \gamma_{31} \\ \gamma_{12} \end{bmatrix} = \begin{bmatrix} 1 & 0 & 0 & 0 & 0 & 0 \\ 0 & 1 & 0 & 0 & 0 & 0 \\ 0 & 0 & 1 & 0 & 0 & 0 \\ 0 & 0 & 0 & 2 & 0 & 0 \\ 0 & 0 & 0 & 0 & 2 & 0 \\ 0 & 0 & 0 & 0 & 0 & 2 \end{bmatrix} \begin{bmatrix} \varepsilon_1 \\ \varepsilon_2 \\ \varepsilon_3 \\ \varepsilon_4 \\ \varepsilon_5 \\ \varepsilon_6 \end{bmatrix}, \tag{3.10}$$

where the conversion matrix is commonly called the Reuter matrix [R]. Engineering strains can now be transformed from the x-y coordinate system $\{\varepsilon\}_x$ to the 1-2 coordinate system $\{\varepsilon\}_1$ by

$$\{\varepsilon\}_1 = [R][T_1][R]^{-1}\{\varepsilon\}_x ,$$

or, carrying out the indicated matrix multiplications,

$$\begin{bmatrix} \varepsilon_1 \\ \varepsilon_2 \\ \varepsilon_3 \\ \gamma_{23} \\ \gamma_{31} \\ \gamma_{12} \end{bmatrix} = \begin{bmatrix} c^2 & c^2 & 0 & 0 & 0 & cs \\ s^2 & s^2 & 0 & 0 & 0 & -cs \\ 0 & 0 & 1 & 0 & 0 & 0 \\ 0 & 0 & 0 & c & -c & 0 \\ 0 & 0 & 0 & s & s & 0 \\ -2cs & 2cs & 0 & 0 & 0 & c^2 - s^2 \end{bmatrix} \begin{bmatrix} \varepsilon_x \\ \varepsilon_y \\ \varepsilon_z \\ \gamma_{yz} \\ \gamma_{zx} \\ \gamma_{xy} \end{bmatrix}. \tag{3.11}$$

This transformation matrix is represented by the symbol $[T_2]$. Expressing the on-axis stresses and strains ($\{\sigma\}_1$ and $\{\varepsilon\}_1$) of Eqs. (3.4) in terms of the off-axis stresses and strains (Eqs. (3.9) and (3.11)) yields

$$[T_1]\{\sigma\}_x = [C][T_2]\{\varepsilon\}_x \,. \tag{3.12}$$

Rearranging Eqs. (3.12) yields

$$\{\sigma\}_x = [T_1]^{-1}[C][T_2]\{\varepsilon\}_x \,,$$

or

$$\{\sigma\}_x = [\overline{C}]\{\varepsilon\}_x \,, \tag{3.13}$$

where

$$[\overline{C}] = [T_1]^{-1}[C\ ][T_2].$$

Expanding Eqs. (3.13), the off-axis stress-strain relationship for the given lamina is

$$\begin{bmatrix} \sigma_x \\ \sigma_y \\ \sigma_z \\ \tau_{yz} \\ \tau_{zx} \\ \tau_{xy} \end{bmatrix} = \begin{bmatrix} \overline{C}_{11} & \overline{C}_{12} & \overline{C}_{13} & 0 & 0 & \overline{C}_{16} \\ \overline{C}_{12} & \overline{C}_{22} & \overline{C}_{23} & 0 & 0 & \overline{C}_{26} \\ \overline{C}_{13} & \overline{C}_{23} & \overline{C}_{33} & 0 & 0 & \overline{C}_{36} \\ 0 & 0 & 0 & \overline{C}_{44} & \overline{C}_{45} & 0 \\ 0 & 0 & 0 & \overline{C}_{45} & \overline{C}_{55} & 0 \\ \overline{C}_{16} & \overline{C}_{26} & \overline{C}_{36} & 0 & 0 & \overline{C}_{66} \end{bmatrix} \begin{bmatrix} \varepsilon_x \\ \varepsilon_y \\ \varepsilon_z \\ \gamma_{yz} \\ \gamma_{zx} \\ \gamma_{xy} \end{bmatrix}, \tag{3.14}$$

where

$$\overline{C}_{11} = c^4C_{11} + 2c^2s^2(C_{12} + 2C_{66}) + c^4C_{22} \ ,$$

$$\overline{C}_{12} = c^2s^2(C_{11} + C_{22} - 4C_{66}) + (s^4 + c^4)C_{12} \ ,$$

$$\overline{C}_{13} = c^2C_{13} + s^2C_{23} \ ,$$

$$\overline{C}_{16} = cs[c^2(C_{11} - C_{12} - 2C_{66}) + s^2(C_{12} - C_{22} + 2C_{66})] \ ,$$

$$\overline{C}_{22} = s^4C_{11} + 2c^2s^2(C_{12} + 2C_{66}) + c^4C_{22} \ ,$$

$$\overline{C}_{23} = c^2C_{13} + s^2C_{23} \ ,$$

$$\overline{C}_{26} = cs[c^2(C_{11} - C_{12} - 2C_{66}) + c^2(C_{12} - C_{22} + 2C_{66})] \ ,$$

$$\overline{C}_{33} = C_{33} \ ,$$

$$\overline{C}_{36} = cs(C_{13} - C_{23}) \ ,$$

$$\overline{C}_{44} = c^2C_{44} + s^2C_{55} \ ,$$

$$\overline{C}_{45} = cs(C_{55} - C_{44}) \ ,$$

$$\overline{C}_{55} = s^2C_{44} + c^2C_{55} \ ,$$

and

$$\overline{C}_{66} = c^2s^2(C_{11} - 2C_{12} + C_{22}) + C_{66}(c^2 - s^2)^2 \ .$$

The transformed stiffness matrix is reduced by recognizing that $\sigma_z = 0$ from the plane stress assumption. When zero is substituted for σ_z in Eqs. (3.14) there results

$$\sigma_z = 0 = \varepsilon_x\overline{C}_{13} + \varepsilon_y\overline{C}_{23} + \varepsilon_z\overline{C}_{33} + \gamma_{yz}\overline{C}_{36} \ . \tag{3.15}$$

Solving Eq. (3.15) for ε_z,

$$\varepsilon_z = -\frac{1}{\overline{C}_{33}}[\varepsilon_x\overline{C}_{13} + \varepsilon_y\overline{C}_{23} + \gamma_{yz}\overline{C}_{36}] \ . \tag{3.16}$$

By eliminating σ_z and substituting Eq. (3.16) for ε_z, the reduced stiffness matrix and stress-strain relationship become

$$\begin{bmatrix} \sigma_x \\ \sigma_y \\ \tau_{xy} \\ \tau_{yz} \\ \tau_{xz} \end{bmatrix} = \begin{bmatrix} Q_{11} & Q_{12} & Q_{13} & 0 & 0 \\ Q_{12} & Q_{22} & Q_{23} & 0 & 0 \\ Q_{13} & Q_{23} & Q_{33} & 0 & 0 \\ 0 & 0 & 0 & Q_{44} & Q_{45} \\ 0 & 0 & 0 & Q_{45} & Q_{55} \end{bmatrix} \begin{bmatrix} \varepsilon_x \\ \varepsilon_y \\ \gamma_{xy} \\ \gamma_{yz} \\ \gamma_{zx} \end{bmatrix} \tag{3.17}$$

where $[Q_{ij}]$ is the transformed *reduced* stiffness matrix. In terms of the *transformed* stiffness matrix its elements are

$$Q_{11} = \overline{C}_{11} - \frac{\overline{C}_{13}^2}{\overline{C}_{33}} \ , \quad Q_{12} = \overline{C}_{12} - \frac{\overline{C}_{13}\overline{C}_{23}}{\overline{C}_{33}} \ , \quad Q_{13} = \overline{C}_{16} - \frac{\overline{C}_{13}\overline{C}_{36}}{\overline{C}_{33}} \ ,$$

$$Q_{22} = \overline{C}_{22} - \frac{\overline{C}_{23}^2}{\overline{C}_{33}} \ , \quad Q_{23} = \overline{C}_{26} - \frac{\overline{C}_{23}\overline{C}_{26}}{\overline{C}_{33}} \ , \quad Q_{33} = \overline{C}_{66} - \frac{\overline{C}_{36}^2}{\overline{C}_{33}} \ ,$$

$$Q_{44} = \overline{C}_{44} \ , \qquad Q_{45} = \overline{C}_{45} \ , \quad \text{and} \quad Q_{55} = \overline{C}_{55} \ .$$

3.2. Strain-Displacement Relations

In the Eulerian viewpoint the strains are described in indicial notation as [36]

$$\varepsilon_{ij} = \frac{1}{2}\left[\frac{\partial u_i}{\partial x_j} + \frac{\partial u_j}{\partial x_i} + \frac{\partial u_k}{\partial x_i}\frac{\partial u_k}{\partial x_j}\right]; \quad i = 1,2,3 \ , \ j = 1,2,3 \ , \tag{3.18}$$

where u_1, u_2, and u_3 are the displacements in the x, y, and z directions and are referred to as u, v, and w, respectively, in the analysis that follows; and the quantities x_1, x_2, and x_3 refer to the orthogonal coordinate directions redesignated x, y, and z, respectively, in the analysis that follows. After substituting the first-order SDT displacement field into the Eulerian strain description, the strains become

$$\varepsilon_x = \frac{\partial u^\circ}{\partial x} + \frac{1}{2}\left[\left(\frac{\partial u^\circ}{\partial x}\right)^2 + \left(\frac{\partial v^\circ}{\partial x}\right)^2 + \left(\frac{\partial w^\circ}{\partial x}\right)^2\right]$$

$$+ z\left(\frac{\partial \psi_x}{\partial x}\right) + \frac{z^2}{2}\left[\left(\frac{\partial \psi_x}{\partial x}\right)^2 + \left(\frac{\partial \psi_y}{\partial x}\right)^2\right], \tag{3.19}$$

$$\varepsilon_y = \frac{\partial v^\circ}{\partial y} + \frac{1}{2}\left[\left(\frac{\partial u^\circ}{\partial y}\right)^2 + \left(\frac{\partial v^\circ}{\partial y}\right)^2 + \left(\frac{\partial w^\circ}{\partial y}\right)^2\right]$$

$$+ z\left(\frac{\partial \psi_y}{\partial y}\right) + \frac{z^2}{2}\left[\left(\frac{\partial \psi_x}{\partial y}\right)^2 + \left(\frac{\partial \psi_y}{\partial y}\right)^2\right], \tag{3.20}$$

$$\varepsilon_z = \frac{\partial w^\circ}{\partial z} + \frac{1}{2}\left[\left(\frac{\partial u^\circ}{\partial z}\right)^2 + \left(\frac{\partial v^\circ}{\partial z}\right)^2 + \left(\frac{\partial w^\circ}{\partial z}\right)^2\right] + \frac{1}{2}\left[\psi_y^2 + \psi_x^2\right], \tag{3.21}$$

$$\varepsilon_{xy} = \frac{1}{2}\left[\frac{\partial u^\circ}{\partial y} + \frac{\partial v^\circ}{\partial x} + \frac{\partial u^\circ}{\partial x}\frac{\partial u^\circ}{\partial y} + \frac{\partial v^\circ}{\partial x}\frac{\partial v^\circ}{\partial y} + \frac{\partial w^\circ}{\partial x}\frac{\partial w^\circ}{\partial y}\right.$$

$$\left. + z\left(\frac{\partial \psi_x}{\partial y} + \frac{\partial \psi_y}{\partial x}\right) + z^2\left(\frac{\partial \psi_x}{\partial x}\frac{\partial \psi_x}{\partial y} + \frac{\partial \psi_y}{\partial x}\frac{\partial \psi_y}{\partial y}\right)\right], \tag{3.22}$$

$$\varepsilon_{yz} = \frac{1}{2}\left[\frac{\partial v_o}{\partial z} + \frac{\partial w_o}{\partial y} + \frac{\partial u^\circ}{\partial z}\frac{\partial u^\circ}{\partial y} + \frac{\partial v^\circ}{\partial z}\frac{\partial v^\circ}{\partial y} + \frac{\partial w^\circ}{\partial z}\frac{\partial w^\circ}{\partial y}\right.$$

$$\left. + \psi_y + z\left(\psi_x\frac{\partial \psi_x}{\partial y} + \psi_y\frac{\partial \psi_y}{\partial y}\right)\right], \tag{3.23}$$

and

$$\varepsilon_{zx} = \frac{1}{2}\left[\frac{\partial w^\circ}{\partial x} + \frac{\partial u^\circ}{\partial z} + \frac{\partial u^\circ}{\partial x}\frac{\partial u^\circ}{\partial z} + \frac{\partial v^\circ}{\partial x}\frac{\partial v^\circ}{\partial z} + \frac{\partial w^\circ}{\partial x}\frac{\partial w^\circ}{\partial z} \right.$$

$$\left. + \psi_x + z(\psi_x \frac{\partial \psi_x}{\partial x} + \psi_y \frac{\partial \psi_y}{\partial y}) \right] . \tag{3.24}$$

Many of the higher-order terms in the strain expressions are negligible in comparison with the first-order terms. Using von Karman's criterion only the squares and products of $\partial w/\partial x$ and $\partial w/\partial y$ are retained. Removing all other higher-order terms and replacing tensorial strains with engineering strains, the strain-displacement relations become

$$\varepsilon_x = \frac{\partial u^\circ}{\partial x} + \frac{1}{2}(\frac{\partial w^\circ}{\partial x})^2 + z(\frac{\partial \psi_x}{\partial x}) , \tag{3.25}$$

$$\varepsilon_y = \frac{\partial v_o}{\partial y} + \frac{1}{2}(\frac{\partial w^\circ}{\partial y})^2 + z(\frac{\partial \psi_y}{\partial y}) , \tag{3.26}$$

$$\varepsilon_z = 0 , \tag{3.27}$$

$$\gamma_{xy} = \frac{\partial u^\circ}{\partial y} + \frac{\partial v^\circ}{\partial x} + \frac{\partial w^\circ}{\partial x}\frac{\partial w^\circ}{\partial y} + z(\frac{\partial \psi_x}{\partial y} + \frac{\partial \psi_y}{\partial x}) , \tag{3.28}$$

$$\gamma_{yz} = \frac{\partial w^\circ}{\partial y} + \psi_y , \tag{3.29}$$

and

$$\gamma_{zx} = \frac{\partial w^\circ}{\partial x} + \psi_x . \tag{3.30}$$

For convenience in notation let

$$\varepsilon_x^o = \frac{\partial u^\circ}{\partial x} + \frac{1}{2}\left(\frac{\partial w^\circ}{\partial x}\right)^2, \quad \varepsilon_y^o = \frac{\partial v^\circ}{\partial y} + \frac{1}{2}\left(\frac{\partial w^\circ}{\partial y}\right)^2, \quad \varepsilon_z^o = 0,$$

$$\gamma_{yz}^o = \frac{\partial w^\circ}{\partial y} + \psi_y, \quad \gamma_{zx}^o = \frac{\partial w^\circ}{\partial x} + \psi_x, \quad \gamma_{xy}^o = \frac{\partial u^\circ}{\partial y} + \frac{\partial v^\circ}{\partial x} + \frac{\partial w^\circ}{\partial x}\,\frac{\partial w^\circ}{\partial y},$$

$$\kappa_x = \frac{\partial \psi_x}{\partial x}, \quad \kappa_y = \frac{\partial \psi_y}{\partial y}, \quad \text{and } \kappa_{xy} = \frac{\partial \psi_x}{\partial y} + \frac{\partial \psi_y}{\partial x}.$$

The total strains can then be written

$$\varepsilon_x = \varepsilon_x^o + z\,\kappa_x, \tag{3.31}$$

$$\varepsilon_y = \varepsilon_y^o + z\,\kappa_y, \tag{3.32}$$

$$\varepsilon_z = \varepsilon_z^o, \tag{3.33}$$

$$\varepsilon_{yz} = \varepsilon_{yz}^o, \tag{3.34}$$

$$\varepsilon_{zx} = \varepsilon_{zx}^o, \tag{3.35}$$

$$\text{and } \varepsilon_{xy} = \varepsilon_{xy}^o + z\,\kappa_{xy}. \tag{3.36}$$

4. Governing Equations for Laminated Plates

In Chapter 3 the stress-strain relationships for an arbitrary lamina, Eq. (3.14), were found. In this chapter those relationships are extended to an arbitrary laminate resulting in force-strain relationships. Thermal forces are also included in the force-strain relationship. Finally, the equations of motion are expanded into five equilibrium equations which fully describe the five degrees of freedom of the laminate: u, v, w, ψ_x, and ψ_y.

4.1. Laminate Forces and Moments

The resultant forces and moments per unit width acting on a laminate can be found by integrating the laminae stress-strain relationship of Eq. (3.14) over the laminate thickness, yielding

$$(N_x,\ N_y) = \int_{-h/2}^{h/2} (\sigma_x,\ \sigma_y)dz\ , \tag{4.1}$$

$$(N_{xy},\ N_{yz},\ N_{xz}) = \int_{-h/2}^{h/2} (\tau_{xy},\ \tau_{yz},\ \tau_{xz})dz\ , \tag{4.2}$$

and

$$(M_x,\ M_y,\ M_{xy}) = \int_{-h/2}^{h/2} (\sigma_x,\ \sigma_y,\ \tau_{xy})\, z\, dz\ , \tag{4.3}$$

where $\tau_{xy} = \tau_{yx}$, $\tau_{zx} = \tau_{xz}$, $\tau_{yz} = \tau_{zy}$, $N_{xy} = N_{yx}$, and $M_{xy} = M_{yx}$. These forces and moments are labeled on the plate in Fig. 4. Figure 5 depicts a laminate of N laminae and gives the lamina numbering system that is used in the analysis. The z-axis is orthogonal to the midplane, positive being up. The laminae are numbered sequentially from 1 to N starting with the top lamina. The laminae interfaces are numbered corresponding to lamina directly below the interface with the laminate top surface being numbered 1 and the laminate bottom surface numbered $N+1$. The z-coordinate of the midplane of the kth lamina is denoted by $\bar{z}_k$. Equations (4.1), (4.2) and (4.3) can now be rewritten using the notation of Fig. 5:

$$(N_x,\ N_y) = \sum_{k=1}^{N} \int_{z_{k+1}}^{z_k} (\sigma_x,\ \sigma_y)dz\ , \tag{4.4}$$

$$(N_{xy},\ N_{yz},\ N_{xz}) = \sum_{k=1}^{N} \int_{z_{k+1}}^{z_k} (\tau_{xy},\ \tau_{yz},\ \tau_{xz})dz\ , \tag{4.5}$$

and

$$(M_x,\ M_y,\ M_{xy}) = \sum_{k=1}^{N} \int_{z_{k+1}}^{z_k} (\sigma_x,\ \sigma_y,\ \tau_{xy})\, z\, dz \ . \tag{4.6}$$

The off-axis stresses can now be replaced with the equivalent stiffness matrix and middle surface strains, Eqs. (3.31) through (3.36). Neither the middle surface strains nor the stiffness matrix are dependent on z so they can be brought outside the integral. After these changes are made Eqs. (4.4), (4.5), and (4.6) can now be written in matrix form as

$$\begin{bmatrix} N_x \\ N_y \\ N_{xy} \\ N_{yz} \\ N_{xz} \\ M_x \\ M_y \\ M_{xy} \end{bmatrix} = \begin{bmatrix} A_{11} & A_{12} & A_{16} & 0 & 0 & B_{11} & B_{12} & B_{16} \\ A_{12} & A_{22} & A_{26} & 0 & 0 & B_{12} & B_{22} & B_{26} \\ A_{16} & A_{26} & A_{66} & 0 & 0 & B_{16} & B_{26} & B_{36} \\ 0 & 0 & 0 & A_{44} & A_{45} & 0 & 0 & 0 \\ 0 & 0 & 0 & A_{45} & A_{55} & 0 & 0 & 0 \\ B_{11} & B_{12} & B_{16} & 0 & 0 & D_{11} & D_{12} & D_{16} \\ B_{12} & B_{22} & B_{26} & 0 & 0 & D_{12} & D_{22} & D_{26} \\ B_{16} & B_{26} & B_{66} & 0 & 0 & D_{16} & D_{26} & D_{36} \end{bmatrix} \begin{bmatrix} \varepsilon_x^o \\ \varepsilon_y^o \\ \gamma_{xy}^o \\ \gamma_{yz}^o \\ \gamma_{xz}^o \\ \kappa_x \\ \kappa_y \\ \kappa_{xy} \end{bmatrix} , \tag{4.7}$$

where

$$A_{ij} = \sum_{k=1}^{N} Q_{ij}(z_k - z_{k+1}) \ , \tag{4.8}$$

$$B_{ij} = \frac{1}{2} \sum_{k=1}^{N} Q_{ij}(z_k^2 - z_{k+1}^2) \ , \tag{4.9}$$

and

$$D_{ij} = \frac{1}{3}\sum_{k=1}^{N} Q_{ij}(z_k^3 - z_{k+1}^3) \ . \tag{4.10}$$

4.2. Thermal Forces and Moments

The three-dimensional thermal strains are induced in the laminate when the temperature of the laminate changes from its stress-free state. The stress free state occurs at a temperature very close to that at which the composite plate is cured. If the cure temperature and coefficients of thermal expansion are known, the thermally-induced strains can be found from

$$\varepsilon_i = \alpha_i \Delta T \ , \qquad i = 1,\ 2,\ 3 \ , \tag{4.11}$$

where α_i are the coefficients of thermal expansion in the ith material direction and ΔT is the change in temperature from the stress-free state to the present temperature.

The lamina thermally-induced stresses can now be found in the principal material directions from Hooke's law as [3]

$$\begin{bmatrix} \sigma_1 \\ \sigma_2 \\ \sigma_3 \\ \sigma_4 \\ \sigma_5 \\ \sigma_6 \end{bmatrix}_T = \begin{bmatrix} C_{11} & C_{12} & C_{13} & 0 & 0 & 0 \\ C_{12} & C_{22} & C_{23} & 0 & 0 & 0 \\ C_{13} & C_{23} & C_{33} & 0 & 0 & 0 \\ 0 & 0 & 0 & C_{44} & 0 & 0 \\ 0 & 0 & 0 & 0 & C_{55} & 0 \\ 0 & 0 & 0 & 0 & 0 & C_{66} \end{bmatrix} \begin{bmatrix} \alpha_1 \\ \alpha_2 \\ \alpha_3 \\ 0 \\ 0 \\ 0 \end{bmatrix} \Delta T. \tag{4.12}$$

As before, we are more concerned with stresses and strains on the laminate coordinate axes than along the principal material directions. Therefore, the coefficients of thermal expansion must be transformed to the on-axis directions by $[T_2]^{-1}$:

$$\begin{bmatrix} \alpha_x \\ \alpha_y \\ \alpha_z \\ 0 \\ 0 \\ \alpha_{xy} \end{bmatrix} = \begin{bmatrix} c^2 & s^2 & 0 & 0 & 0 & -cs \\ s^2 & c^2 & 0 & 0 & 0 & cs \\ 0 & 0 & 1 & 0 & 0 & 0 \\ 0 & 0 & 0 & c & s & 0 \\ 0 & 0 & 0 & -s & c & 0 \\ 2cs & -2cs & 0 & 0 & 0 & c^2 - s^2 \end{bmatrix} \begin{bmatrix} \alpha_1 \\ \alpha_2 \\ \alpha_3 \\ 0 \\ 0 \\ 0 \end{bmatrix} , \tag{4.13}$$

or, written out,

$$\alpha_x = c^2 \alpha_1 + s^2 \alpha_2 , \tag{4.14}$$

$$\alpha_y = s^2 \alpha_1 + c^2 \alpha_2 , \tag{4.15}$$

$$\alpha_z = \alpha_3 , \tag{4.16}$$

and

$$\alpha_{xy} = 2cs (\alpha_1 - \alpha_2) . \tag{4.17}$$

Upon substituting the on-axis thermally-induced strains into Eq. (4.12), the corresponding stresses can be expressed

$$\begin{bmatrix} \sigma_x \\ \sigma_y \\ \sigma_z \\ \tau_{yz} \\ \tau_{xz} \\ \tau_{xy} \end{bmatrix}_T = \begin{bmatrix} \overline{C}_{11} & \overline{C}_{12} & \overline{C}_{13} & 0 & 0 & \overline{C}_{16} \\ \overline{C}_{12} & \overline{C}_{22} & \overline{C}_{23} & 0 & 0 & \overline{C}_{26} \\ \overline{C}_{13} & \overline{C}_{23} & \overline{C}_{33} & 0 & 0 & \overline{C}_{36} \\ 0 & 0 & 0 & \overline{C}_{44} & \overline{C}_{45} & 0 \\ 0 & 0 & 0 & \overline{C}_{45} & \overline{C}_{55} & 0 \\ \overline{C}_{16} & \overline{C}_{26} & \overline{C}_{36} & 0 & 0 & \overline{C}_{66} \end{bmatrix} \begin{bmatrix} \alpha_x \\ \alpha_y \\ \alpha_z \\ 0 \\ 0 \\ \alpha_{xy} \end{bmatrix} \Delta T \ . \tag{4.18}$$

As was done in Section 3.1, σ_z is assumed to be zero and therefore, can be eliminated from Eqs. (4.18). Now, α_z can be rewritten in terms of α_x, α_y, and α_{xy} as

$$\alpha_z = -\frac{1}{\overline{C}_{33}} [\alpha_x \overline{C}_{13} + \alpha_y \overline{C}_{23} + \alpha_{xy} \overline{C}_{36}]. \tag{4.19}$$

Substituting Eq. (4.19) into Eq. (4.18) yields

$$\begin{bmatrix} \sigma_x \\ \sigma_y \\ \tau_{xy} \\ \tau_{yz} \\ \tau_{xz} \end{bmatrix}_T = \begin{bmatrix} Q_{11} & Q_{12} & Q_{13} & 0 & 0 \\ Q_{12} & Q_{22} & Q_{23} & 0 & 0 \\ Q_{13} & Q_{23} & Q_{33} & 0 & 0 \\ 0 & 0 & 0 & Q_{44} & Q_{45} \\ 0 & 0 & 0 & Q_{45} & Q_{55} \end{bmatrix} \begin{bmatrix} \alpha_x \Delta T \\ \alpha_y \Delta T \\ \alpha_{xy} \Delta T \\ 0 \\ 0 \end{bmatrix}, \tag{4.20}$$

where [Q] is the same stiffness matrix as in Eq. (3.17). At this point the strain caused by mechanical loads can be added to the thermally-induced strains to give the total strain. The purely mechanically induced stresses can now be expressed as

$$\begin{bmatrix} \sigma_x \\ \sigma_y \\ \tau_{xy} \\ \tau_{yz} \\ \tau_{xz} \end{bmatrix}_M = \begin{bmatrix} Q_{11} & Q_{12} & Q_{13} & 0 & 0 \\ Q_{12} & Q_{22} & Q_{23} & 0 & 0 \\ Q_{13} & Q_{23} & Q_{33} & 0 & 0 \\ 0 & 0 & 0 & Q_{44} & Q_{45} \\ 0 & 0 & 0 & Q_{45} & Q_{55} \end{bmatrix} \begin{bmatrix} \bar{\varepsilon}_x - \alpha_x \Delta T \\ \bar{\varepsilon}_y - \alpha_y \Delta T \\ \bar{\gamma}_{xy} - \alpha_{xy} \Delta T \\ \bar{\gamma}_{yz} \\ \bar{\gamma}_{xz} \end{bmatrix}, \tag{4.21}$$

where $\bar{\varepsilon}_x$, $\bar{\varepsilon}_y$, $\bar{\gamma}_{xy}$, $\bar{\gamma}_{yz}$, and $\bar{\gamma}_{xz}$ now represent the total strains, mechanical plus free thermal.

With the use of the expressions developed at the beginning of this chapter, Eqs. (4.4) through (4.10), Eqs. (4.21) can be integrated over the laminate thickness to yield an expression for the laminate mechanical forces and moments:

$$\begin{bmatrix} N_x \\ N_y \\ N_{xy} \\ N_{yz} \\ N_{xz} \\ M_x \\ M_y \\ M_{xy} \end{bmatrix} = \begin{bmatrix} A_{11} & A_{12} & A_{16} & 0 & 0 & B_{11} & B_{12} & B_{16} \\ A_{12} & A_{22} & A_{26} & 0 & 0 & B_{12} & B_{22} & B_{26} \\ A_{16} & A_{26} & A_{66} & 0 & 0 & B_{16} & B_{26} & B_{36} \\ 0 & 0 & 0 & A_{44} & A_{45} & 0 & 0 & 0 \\ 0 & 0 & 0 & A_{45} & A_{55} & 0 & 0 & 0 \\ B_{11} & B_{12} & B_{16} & 0 & 0 & D_{11} & D_{12} & D_{16} \\ B_{12} & B_{22} & B_{26} & 0 & 0 & D_{12} & D_{22} & D_{26} \\ B_{16} & B_{26} & B_{66} & 0 & 0 & D_{16} & D_{26} & D_{36} \end{bmatrix} \begin{bmatrix} \varepsilon_x^o \\ \varepsilon_y^o \\ \gamma_{xy}^o \\ \gamma_{yz}^o \\ \gamma_{xz}^o \\ \kappa_x \\ \kappa_y \\ \kappa_{xy} \end{bmatrix} - \begin{bmatrix} N_x^T \\ N_y^T \\ N_{xy}^T \\ 0 \\ 0 \\ M_x^T \\ M_y^T \\ M_{xy}^T \end{bmatrix}, \tag{4.22}$$

where the superscript T on the right-hand side indicates thermal forces and moments. The total forces and moments can be expressed by adding the thermal forces and moments to both sides of Eqs. (4.22) to give

$$
\begin{bmatrix} \overline{N}_x \\ \overline{N}_y \\ \overline{N}_{xy} \\ \overline{N}_{yz} \\ \overline{N}_{xz} \\ \overline{M}_x \\ \overline{M}_y \\ \overline{M}_{xy} \end{bmatrix}
=
\begin{bmatrix}
A_{11} & A_{12} & A_{16} & 0 & 0 & B_{11} & B_{12} & B_{16} \\
A_{12} & A_{22} & A_{26} & 0 & 0 & B_{12} & B_{22} & B_{26} \\
A_{16} & A_{26} & A_{66} & 0 & 0 & B_{16} & B_{26} & B_{36} \\
0 & 0 & 0 & A_{44} & A_{45} & 0 & 0 & 0 \\
0 & 0 & 0 & A_{45} & A_{55} & 0 & 0 & 0 \\
B_{11} & B_{12} & B_{16} & 0 & 0 & D_{11} & D_{12} & D_{16} \\
B_{12} & B_{22} & B_{26} & 0 & 0 & D_{12} & D_{22} & D_{26} \\
B_{16} & B_{26} & B_{66} & 0 & 0 & D_{16} & D_{26} & D_{36}
\end{bmatrix}
\begin{bmatrix} \overline{\varepsilon}_x^{\,o} \\ \overline{\varepsilon}_y^{\,o} \\ \overline{\gamma}_{xy}^{\,o} \\ \overline{\gamma}_{yz}^{\,o} \\ \overline{\gamma}_{xz}^{\,o} \\ \overline{\kappa}_x \\ \overline{\kappa}_y \\ \overline{\kappa}_{xy} \end{bmatrix} , \tag{4.23}
$$

where

$$\overline{N}_x = N_x^T + N_x \ , \quad \overline{N}_y = N_y^T + N_y \ ,$$

$$\overline{N}_{xy} = N_{xy}^T + N_{xy} \ , \quad \overline{N}_{yz} = N_{yz} \ ,$$

$$\overline{N}_{xz} = N_{xz} \ , \quad \overline{M}_x = M_x^T + M_x \ ,$$

$$\overline{M}_y = M_y \ , \text{ and } \overline{M}_{xy} = M_{xy}^T + M_{xy} \ .$$

In the paragraphs which follow, expressions for the thermally induced forces and moments (N_x^T, N_y^T, N_{xy}^T, M_x^T, M_y^T, and M_{xy}^T) are derived on the basis of a piecewise-linear temperature distribution in the z-direction. A typical graphite lamina thickness is on the order of 0.15 mm (.006 in.) and so it seems reasonable to assume that the temperature distribution through the lamina thickness is linear and, therefore, piecewise linear through the laminate thickness. The temperature field can then be described as

$$T(x,y,z) = T_k(x,y) + \frac{1}{t_k} \left(T_{k+1}(x,y) - T_k(x,y)\right)(z_k - z) \ , \tag{4.24}$$

where T_k is the temperature at the lamina interface above the kth lamina, T_{k+1} is the temperature at the lamina interface above the $k^{th} + 1$ lamina, z_k is the z-coordinate of the lamina interface above the kth lamina, and t_k is the thickness of the kth lamina. If T_o refers to the stress-free temperature then

$$\Delta T = T(x,y,z) - T_o \ . \tag{4.25}$$

The thermally-induced forces can now be found in the same manner as the mechanical forces were found in Chapter 3. The thermal forces and moments are therefore written

$$\begin{bmatrix} N_x^T \\ N_y^T \\ N_{xy}^T \end{bmatrix} = \sum_{k=1}^{N} \int_{z_{k+1}}^{z_k} \begin{bmatrix} Q_{11} & Q_{12} & Q_{13} \\ Q_{12} & Q_{22} & Q_{23} \\ Q_{13} & Q_{23} & Q_{33} \end{bmatrix}_k \begin{bmatrix} \alpha_x \\ \alpha_y \\ \alpha_{xy} \end{bmatrix}_k \Delta T \, dz \tag{4.26}$$

and

$$\begin{bmatrix} M_x^T \\ M_y^T \\ M_{xy}^T \end{bmatrix} = \sum_{k=1}^{N} \int_{z_{k+1}}^{z_k} \begin{bmatrix} Q_{11} & Q_{12} & Q_{13} \\ Q_{12} & Q_{22} & Q_{23} \\ Q_{13} & Q_{23} & Q_{33} \end{bmatrix}_k \begin{bmatrix} \alpha_x \\ \alpha_y \\ \alpha_{xy} \end{bmatrix}_k \Delta T \, z \, dz \ . \tag{4.27}$$

The stiffness matrix $[Q_{ij}]$ and the coefficients of thermal expansion α_x, α_y, and α_{xy} do not depend on z and can be taken outside of the integral. The terms remaining in the integrand are z and ΔT. Replacing ΔT with Eqs. (4.24) through (4.25) and integrating over the lamina thickness leads to

$$\int_{z_{k+1}}^{z_k} \Delta T dz = t_k \left[(T_k + T_{k+1})/2 - T_o \right] \ , \tag{4.28}$$

and

$$\int_{z_{k+1}}^{z_k} \Delta T z dz = t_k [T_k (\frac{\bar{z}_k}{2} + \frac{t_k}{12}) + T_{k+1}(\frac{\bar{z}_k}{2} - \frac{t_k}{12}) - T_o \bar{z}_k], \tag{4.29}$$

where $\bar{z}_k$ is the z-coordinate of the middle of the kth lamina. The thermal forces and moments can now be written as

$$\begin{bmatrix} N_x^T \\ N_y^T \\ N_{xy}^T \end{bmatrix} = \sum_{k=1}^{N} \begin{bmatrix} Q_{11} & Q_{12} & Q_{13} \\ Q_{12} & Q_{22} & Q_{23} \\ Q_{13} & Q_{23} & Q_{33} \end{bmatrix}_k \begin{bmatrix} \alpha_x \\ \alpha_y \\ \alpha_{xy} \end{bmatrix}_k t_k [(T_k + T_{k+1})/2 - T_o] \tag{4.30}$$

and

$$\begin{bmatrix} M_x^T \\ M_y^T \\ M_{xy}^T \end{bmatrix} = \sum_{k=1}^{N} \begin{bmatrix} Q_{11} & Q_{12} & Q_{13} \\ Q_{12} & Q_{22} & Q_{23} \\ Q_{13} & Q_{23} & Q_{33} \end{bmatrix}_k \begin{bmatrix} \alpha_x \\ \alpha_y \\ \alpha_{xy} \end{bmatrix}_k t_k [T_k(\frac{\bar{z}_k}{2} + \frac{t_k}{12}) + T_{k+1}(\frac{\bar{z}_k}{2} - \frac{t_k}{12}) - T_o \bar{z}_k] \tag{4.31}$$

4.3. Equations of Motion

Up to this point the strains have been defined in terms of the five degrees of freedom: u, v, w, ψ_x, and ψ_y. The stresses have been found from Hooke's law in terms of the strains, and the laminate forces and moments have been defined in terms of the mechanical and thermal strains. In order to completely describe the dynamic behavior of

the three-dimensional laminate, the equations of equilibrium must also be satisfied. Consider the infinitesimal cube with dimensions dx, dy, and dz shown in Fig. 6. All of the nonzero stresses considered in this thesis are assumed to be acting on the cube. The net force in the x- and y-directions can be written

$$F_x = \frac{\partial \sigma_x}{\partial x} \, dxdydz + \frac{\partial \tau_{xy}}{\partial y} \, dydxdz \tag{4.32}$$

and

$$F_y = \frac{\partial \sigma_y}{\partial y} \, dydxdz + \frac{\partial \tau_{xy}}{\partial x} \, dxdydz \, . \tag{4.33}$$

Because of the plate geometry, the net force in the z-direction also contains in-plane stress terms which cause nonzero z-directed forces when the plate becomes nonplanar [37]. The net force in the z-direction is therefore

$$F_z = \frac{\partial \tau_{yz}}{\partial y} \, dydxdz + \frac{\partial \tau_{xz}}{\partial x} \, dxdydz +$$

$$\frac{\partial}{\partial x}(\sigma_x \frac{\partial w}{\partial x} + \tau_{xy} \frac{\partial w}{\partial y})dxdydz + \frac{\partial}{\partial y}(\sigma_y \frac{\partial w}{\partial y} + \tau_{xy} \frac{\partial w}{\partial x})dxdydz \, . \tag{4.34}$$

The equations of equilibrium can now be found by substituting the net forces into Newton's second law of motion. By assuming that only symmetric laminates will be analyzed we can ignore rotary inertia terms and therefore the acceleration terms in the three directions are

$$\ddot{u} + z\ddot{\psi}_x \, ,$$

$$\ddot{v} + z\ddot{\psi}_y ,$$

and

$$\ddot{w} ,$$

and the mass is denoted by $\rho dxdydz$, where ρ is the mass density. Newton's second law then becomes

$$\rho(\ddot{u} + z\ddot{\psi}_x)dxdydz = \left[\frac{\partial \sigma_x}{\partial x} + \frac{\partial \tau_{xy}}{\partial y} \right] dxdydz ,$$

$$\rho(\ddot{v} + z\ddot{\psi}_y)dxdydz = \left[\frac{\partial \tau_{xy}}{\partial x} + \frac{\partial \sigma_y}{\partial y} \right] dxdydz ,$$

and

$$\rho\ddot{w}dxdydz = \left[\frac{\partial \tau_{yz}}{\partial y} + \frac{\partial \tau_{xz}}{\partial x} + \frac{\partial}{\partial x}(\sigma_x \frac{\partial w}{\partial x} + \tau_{xy} \frac{\partial w}{\partial y}) + \frac{\partial}{\partial y}(\tau_{xy} \frac{\partial w}{\partial x} + \sigma_y \frac{\partial w}{\partial y}) \right] dxdydz .$$

Similarly, moment equilibrium equations can also be derived. The moment equilibrium equations based on the net moments about the x- and y-axes are

$$\rho z(\ddot{v} + z\ddot{\psi}_y)dxdydz = (z \frac{\partial \tau_{xy}}{\partial x} + z \frac{\partial \sigma_y}{\partial y} - \tau_{yz})dxdydz \tag{4.35}$$

and

$$\rho z(\ddot{u} + z\ddot{\psi}_x)dxdydz = (z \frac{\partial \sigma_x}{\partial x} + z \frac{\partial \tau_{xy}}{\partial y} - \tau_{xz})dxdydz . \tag{4.36}$$

Equations (4.32) through (4.36) can now be divided through by dxdydz. Recalling Eqs. (4.4) through (4.6), the equilibrium equations can be integrated through the laminate thickness yielding

$$\rho h \frac{\partial^2 u}{\partial t^2} = \frac{\partial N_x}{\partial x} + \frac{\partial N_{xy}}{\partial y} \quad , \tag{4.37}$$

$$\rho h \frac{\partial^2 v}{\partial t^2} = \frac{\partial N_{xy}}{\partial x} + \frac{\partial N_y}{\partial y} \quad , \tag{4.38}$$

$$\rho h \frac{\partial^2 w}{\partial t^2} = \frac{\partial N_{xz}}{\partial x} + \frac{\partial N_{yz}}{\partial y} + \frac{\partial}{\partial x}\left(N_x \frac{\partial w}{\partial x} + N_{xy} \frac{\partial w}{\partial y}\right) + \frac{\partial}{\partial y}\left(N_{xy} \frac{\partial w}{\partial x} + N_y \frac{\partial w}{\partial y}\right) \quad , \tag{4.39}$$

$$\frac{\rho h^3}{12} \frac{\partial^2 \psi_x}{\partial t^2} = \frac{\partial M_x}{\partial x} + \frac{\partial M_{xy}}{\partial y} - N_{xz} \quad , \tag{4.40}$$

and

$$\frac{\rho h^3}{12} \frac{\partial^2 \psi_y}{\partial t^2} = \frac{\partial M_{xy}}{\partial x} + \frac{\partial M_y}{\partial y} - N_{yz} \quad . \tag{4.41}$$

5. Finite Element Model

The salient features of the finite element model are explained in this chapter. First, the equations of dynamic equilibrium are expanded and recast into a variational formulation. Interpolation functions are derived and the equilibrium equations are rewritten in matrix form. The Newmark method is employed to integrate the equations with respect to time. The nonlinearity of the dynamic equilibrium equations is treated using the Newton-Raphson method. Gauss-Legendre quadrature is used to evaluate the integrals. Finally, reduced integration is explained with respect to the shear terms of the dynamic equilibrium equations.

5.1. Variational Formulation

The equations of dynamic equilibrium, Eqs. (4.37) through (4.41) are more easily treated under the following substitutions:

$$N_x = \overline{N}_x - N_x^T, \quad M_x = \overline{M}_x - M_x^T,$$

$$N_y = \overline{N}_y - N_y^T, \quad M_y = \overline{M}_y - M_y^T,$$

$$N_{xy} = \overline{N}_{xy} - N_{xy}^T, \text{ and } M_{xy} = \overline{M}_{xy} - M_{xy}^T.$$

When the total forces and moments are expressed in terms of the corresponding strains and stiffness's, Eqs. (4.21), the equations of dynamic equilibrium, Eqs. (4.37) through (4.41), become

$$\rho h \frac{\partial^2 u}{\partial t^2} - \frac{\partial}{\partial x}\left[A_{11}\left(\frac{\partial u}{\partial x} + \frac{1}{2}\left(\frac{\partial w}{\partial x}\right)^2\right) + A_{12}\left(\frac{\partial v}{\partial y} + \frac{1}{2}\left(\frac{\partial w}{\partial y}\right)^2\right)\right.$$

$$\left. + A_{16}\left(\frac{\partial u}{\partial y} + \frac{\partial v}{\partial x} + \frac{\partial w}{\partial x}\frac{\partial w}{\partial y}\right) + B_{11}\frac{\partial \psi_x}{\partial x} + B_{12}\frac{\partial \psi_y}{\partial y} + B_{16}\left(\frac{\partial \psi_x}{\partial y} + \frac{\partial \psi_y}{\partial x}\right)\right]$$

$$-\frac{\partial}{\partial y}\left[A_{16}\left(\frac{\partial u}{\partial x} + \frac{1}{2}\left(\frac{\partial w}{\partial x}\right)^2\right) + A_{26}\left(\frac{\partial v}{\partial y} + \frac{1}{2}\left(\frac{\partial w}{\partial y}\right)^2\right) + A_{66}\left(\frac{\partial u}{\partial y} + \frac{\partial v}{\partial x} + \right.\right.$$

$$\left.\left.\frac{\partial w}{\partial x}\frac{\partial w}{\partial y}\right) + B_{16}\frac{\partial \psi_x}{\partial x} + B_{26}\frac{\partial \psi_y}{\partial y} + B_{66}\left(\frac{\partial \psi_x}{\partial y} + \frac{\partial \psi_y}{\partial x}\right)\right] = -\frac{\partial N_x^T}{\partial x} - \frac{\partial N_{xy}^T}{\partial y}, \quad (5.1)$$

$$\rho h \frac{\partial^2 v}{\partial t^2} - \frac{\partial}{\partial x}\left[A_{16}\left(\frac{\partial u}{\partial x} + \frac{1}{2}\left(\frac{\partial w}{\partial x}\right)^2\right) + A_{26}\left(\frac{\partial v}{\partial y} + \frac{1}{2}\left(\frac{\partial w}{\partial y}\right)^2\right)\right.$$

$$\left. + A_{66}\left(\frac{\partial u}{\partial y} + \frac{\partial v}{\partial x} + \frac{\partial w}{\partial x}\frac{\partial w}{\partial y}\right) + B_{16}\frac{\partial \psi_x}{\partial x} + B_{26}\frac{\partial \psi_y}{\partial y} + B_{66}\left(\frac{\partial \psi_x}{\partial y} + \frac{\partial \psi_y}{\partial x}\right)\right]$$

$$-\frac{\partial}{\partial y}\left[A_{12}\left(\frac{\partial u}{\partial x} + \frac{1}{2}\left(\frac{\partial w}{\partial x}\right)^2\right) + A_{22}\left(\frac{\partial v}{\partial y} + \frac{1}{2}\left(\frac{\partial w}{\partial y}\right)^2\right) + A_{26}\left(\frac{\partial u}{\partial y} + \frac{\partial v}{\partial x} + \right.\right.$$

$$\frac{\partial w}{\partial x}\frac{\partial w}{\partial y}\Bigg) + B_{12}\frac{\partial \psi_x}{\partial x} + B_{22}\frac{\partial \psi_y}{\partial y} + B_{26}\left(\frac{\partial \psi_x}{\partial y} + \frac{\partial \psi_y}{\partial x}\right)\Bigg] = -\frac{\partial N_{xy}^T}{\partial x} - \frac{\partial N_y^T}{\partial y} \quad , \qquad (5.2)$$

$$\rho h \frac{\partial^2 w}{\partial t^2} - \frac{\partial}{\partial x}\Bigg[\frac{\partial w}{\partial x}\Bigg[A_{11}\left(\frac{\partial u}{\partial x} + \frac{1}{2}\left(\frac{\partial w}{\partial x}\right)^2\right) + A_{12}\left(\frac{\partial v}{\partial y} + \frac{1}{2}\left(\frac{\partial w}{\partial y}\right)^2\right)$$

$$+ A_{16}\left(\frac{\partial u}{\partial y} + \frac{\partial v}{\partial x} + \frac{\partial w}{\partial x}\frac{\partial w}{\partial y}\right) + B_{11}\frac{\partial \psi_x}{\partial x} + B_{12}\frac{\partial \psi_y}{\partial y} + B_{16}\left(\frac{\partial \psi_x}{\partial y} + \frac{\partial \psi_y}{\partial x}\right)\Bigg]$$

$$+ \frac{\partial w}{\partial y}\Bigg[A_{16}\left(\frac{\partial u}{\partial x} + \frac{1}{2}\left(\frac{\partial w}{\partial x}\right)^2\right) + A_{26}\left(\frac{\partial v}{\partial y} + \frac{1}{2}\left(\frac{\partial w}{\partial y}\right)^2\right)$$

$$+ A_{66}\left(\frac{\partial u}{\partial y} + \frac{\partial v}{\partial x} + \frac{\partial w}{\partial x}\frac{\partial w}{\partial y}\right) + B_{16}\frac{\partial \psi_x}{\partial x} + B_{26}\frac{\partial \psi_y}{\partial y} + B_{66}\left(\frac{\partial \psi_{xy}}{\partial y} + \frac{\partial \psi_y}{\partial x}\right)\Bigg]\Bigg]$$

$$- \frac{\partial}{\partial y}\Bigg[\frac{\partial w}{\partial x}\Bigg[A_{16}\left(\frac{\partial u}{\partial x} + \frac{1}{2}\left(\frac{\partial w}{\partial x}\right)^2\right) + A_{26}\left(\frac{\partial v}{\partial y} + \frac{1}{2}\left(\frac{\partial w}{\partial y}\right)^2\right)$$

$$+ A_{66}\left(\frac{\partial u}{\partial y} + \frac{\partial v}{\partial x} + \frac{\partial w}{\partial x}\frac{\partial w}{\partial y}\right) + B_{16}\frac{\partial \psi_x}{\partial x} + B_{26}\frac{\partial \psi_y}{\partial y} + B_{66}\left(\frac{\partial \psi_x}{\partial y} + \frac{\partial \psi_y}{\partial x}\right)\Bigg]$$

$$+ \frac{\partial w}{\partial y}\Bigg[A_{12}\left(\frac{\partial u}{\partial x} + \frac{1}{2}\left(\frac{\partial w}{\partial x}\right)^2\right) + A_{22}\left(\frac{\partial v}{\partial y} + \frac{1}{2}\left(\frac{\partial w}{\partial y}\right)^2\right)$$

$$+ A_{26}\left(\frac{\partial u}{\partial y} + \frac{\partial v}{\partial x} + \frac{\partial w}{\partial x}\frac{\partial w}{\partial y}\right) + B_{12}\frac{\partial \psi_x}{\partial x} + B_{22}\frac{\partial \psi_y}{\partial y} + B_{26}\left(\frac{\partial \psi_x}{\partial y} + \frac{\partial \psi_y}{\partial x}\right)\Bigg]\Bigg]$$

$$-\frac{\partial}{\partial x}\left[A_{55}\left(\psi_x+\frac{\partial w}{\partial x}\right)+A_{45}\left(\psi_y+\frac{\partial w}{\partial y}\right)\right]-\frac{\partial}{\partial y}\left[A_{45}\left(\psi_x+\frac{\partial w}{\partial x}\right)+\right.$$

$$\left.A_{44}\left(\psi_y+\frac{\partial w}{\partial y}\right)\right]=P+\frac{\partial}{\partial x}\left[N_x^T\frac{\partial w}{\partial x}+N_{xy}^T\frac{\partial w}{\partial y}\right]+\frac{\partial}{\partial y}\left[N_{xy}^T\frac{\partial w}{\partial x}+N_y^T\frac{\partial w}{\partial y}\right], \quad (5.3)$$

$$\frac{\rho h^3}{12}\frac{\partial^2\psi_x}{\partial t^2}-\frac{\partial}{\partial x}\left[B_{11}\left(\frac{\partial u}{\partial x}+\frac{1}{2}\left(\frac{\partial w}{\partial x}\right)^2\right)+B_{12}\left(\frac{\partial v}{\partial y}+\frac{1}{2}\left(\frac{\partial w}{\partial y}\right)^2\right)\right.$$

$$\left.+B_{16}\left(\frac{\partial u}{\partial y}+\frac{\partial v}{\partial x}+\frac{\partial w}{\partial x}\frac{\partial w}{\partial y}\right)+D_{11}\frac{\partial\psi_x}{\partial x}+D_{12}\frac{\partial\psi_y}{\partial y}+D_{16}\left(\frac{\partial\psi_x}{\partial y}+\frac{\partial\psi_y}{\partial x}\right)\right]$$

$$-\frac{\partial}{\partial y}\left[B_{16}\left(\frac{\partial u}{\partial x}+\frac{1}{2}\left(\frac{\partial w}{\partial x}\right)^2\right)+B_{26}\left(\frac{\partial v}{\partial y}+\frac{1}{2}\left(\frac{\partial w}{\partial y}\right)^2\right)\right.$$

$$\left.+B_{66}\left(\frac{\partial u}{\partial y}+\frac{\partial v}{\partial x}+\frac{\partial w}{\partial x}\frac{\partial w}{\partial y}\right)+D_{16}\frac{\partial\psi_x}{\partial x}+D_{26}\frac{\partial\psi_y}{\partial y}+D_{66}\left(\frac{\partial\psi_x}{\partial y}+\frac{\partial\psi_y}{\partial x}\right)\right]$$

$$+A_{55}\left[\psi_x+\frac{\partial w}{\partial x}\right]+A_{45}\left[\psi_y+\frac{\partial w}{\partial y}\right]=-\frac{\partial M_x^T}{\partial x}-\frac{\partial M_{xy}^T}{\partial y}, \quad (5.4)$$

and

$$\frac{\rho h^3}{12}\frac{\partial^2\psi_y}{\partial t^2}-\frac{\partial}{\partial x}\left[B_{16}\left(\frac{\partial u}{\partial x}+\frac{1}{2}\left(\frac{\partial w}{\partial x}\right)^2\right)+B_{26}\left(\frac{\partial v}{\partial y}+\frac{1}{2}\left(\frac{\partial w}{\partial y}\right)^2\right)\right.$$

$$\left.+B_{66}\left(\frac{\partial u}{\partial y}+\frac{\partial v}{\partial x}+\frac{\partial w}{\partial x}\frac{\partial w}{\partial y}\right)+D_{16}\frac{\partial\psi_x}{\partial x}+D_{26}\frac{\partial\psi_y}{\partial y}+D_{66}\left(\frac{\partial\psi_x}{\partial y}+\frac{\partial\psi_y}{\partial x}\right)\right]$$

$$-\frac{\partial}{\partial y}\left[B_{12}\left(\frac{\partial u}{\partial x}+\frac{1}{2}\left(\frac{\partial w}{\partial x}\right)^2\right)+B_{22}\left(\frac{\partial v}{\partial y}+\frac{1}{2}\left(\frac{\partial w}{\partial y}\right)^2\right)\right.$$

$$\left.+B_{26}\left(\frac{\partial u}{\partial y}+\frac{\partial v}{\partial x}+\frac{\partial w}{\partial x}\frac{\partial w}{\partial y}\right)+D_{12}\frac{\partial \psi_x}{\partial x}+D_{22}\frac{\partial \psi_y}{\partial y}+D_{26}\left(\frac{\partial \psi_x}{\partial y}+\frac{\partial \psi_y}{\partial x}\right)\right]$$

$$+A_{45}\left[\psi_x+\frac{\partial w}{\partial x}\right]+A_{55}\left[\psi_y+\frac{\partial w}{\partial y}\right]=-\frac{\partial M_{xy}^T}{\partial x}-\frac{\partial M_y^T}{\partial y}\quad . \tag{5.5}$$

Variational formulation in the context of this thesis means the recasting of differential equations, Eqs. (5.1) through (5.5), into an equivalent integral form by distributing the differentiation between a *test* , λ, and the dependent variables. The reason for this manipulation is to minimize the order of differentiation of the dependent variables and to specify the secondary variables of the problem. For example, Eq. (5.1) is first multiplied by a test function, λ, and then integrated over the element area, Ω, yielding

$$\int_\Omega\left[\lambda\rho h\frac{\partial^2 u}{\partial t^2}-\lambda\frac{\partial}{\partial x}\left[A_{11}\left(\frac{\partial u}{\partial x}+\frac{1}{2}\left(\frac{\partial w}{\partial x}\right)^2\right)+A_{12}\left(\frac{\partial v}{\partial y}+\frac{1}{2}\left(\frac{\partial w}{\partial y}\right)^2\right)\right.\right.$$

$$\left.+A_{16}\left(\frac{\partial u}{\partial y}+\frac{\partial v}{\partial x}+\frac{\partial w}{\partial x}\frac{\partial w}{\partial y}\right)+B_{11}\frac{\partial \psi_x}{\partial x}+B_{12}\frac{\partial \psi_y}{\partial y}+B_{16}\left(\frac{\partial \psi_x}{\partial y}+\frac{\partial \psi_y}{\partial x}\right)\right]$$

$$-\lambda\frac{\partial}{\partial y}\left[A_{16}\left(\frac{\partial u}{\partial x}+\frac{1}{2}\left(\frac{\partial w}{\partial x}\right)^2\right)+A_{26}\left(\frac{\partial v}{\partial y}+\frac{1}{2}\left(\frac{\partial w}{\partial y}\right)^2\right)\right. \tag{5.6}$$

$$+A_{66}\left(\frac{\partial u}{\partial y}+\frac{\partial v}{\partial x}+\frac{\partial w}{\partial x}\frac{\partial w}{\partial y}\right)+B_{16}\frac{\partial \psi_x}{\partial x}+$$

$$B_{26}\frac{\partial\psi_y}{\partial y}+B_{66}\left(\frac{\partial\psi_x}{\partial y}+\frac{\partial\psi_y}{\partial x}\right)\Bigg]+\lambda\frac{\partial N_x^T}{\partial x}+\lambda\frac{\partial N_{xy}^T}{\partial y}\Bigg]dxdy=0\ .$$

Wherever there are second derivatives in Eq. (5.6) the differentiation can be equally distributed between λ and the dependent variable by noting that for any two differentiable functions f and g

$$\int_\Omega g\frac{\partial f}{\partial x}dxdy=-\int_\Omega f\frac{\partial g}{\partial x}dxdy+\int_\Omega\frac{\partial}{\partial x}(fg)dxdy$$

and

$$\int_\Omega g\frac{\partial f}{\partial y}dxdy=-\int_\Omega f\frac{\partial g}{\partial y}dxdy+\int_\Omega\frac{\partial}{\partial y}(fg)dxdy\ .$$

But by the divergence theorem

$$\int_\Omega\frac{\partial}{\partial x}(fg)dxdy=\int_\Gamma(fg)n_x ds$$

and

$$\int_\Omega\frac{\partial}{\partial y}(fg)dxdy=\int_\Gamma(fg)n_y ds\ .$$

Therefore,

$$\int_{\Omega} g \frac{\partial f}{\partial x} dxdy = -\int_{\Omega} f \frac{\partial g}{\partial x} dxdy + \int_{\Gamma} (fg) n_x ds$$

and

$$\int_{\Omega} g \frac{\partial f}{\partial y} dxdy = -\int_{\Omega} f \frac{\partial g}{\partial y} dxdy + \int_{\Gamma} (fg) n_y ds ,$$

where n_x and n_y are the x and y components, respectively, of the unit normal to the element boundary, Γ, and ds is an infinitesimal arc length along the boundary. With these considerations Eq. (5.6) becomes

$$\int_{\Omega} \Bigg[\lambda \rho h \frac{\partial^2 u}{\partial t^2} + \frac{\partial \lambda}{\partial x} \Bigg[A_{11} \left(\frac{\partial u}{\partial x} + \frac{1}{2} \left(\frac{\partial w}{\partial x} \right)^2 \right) + A_{12} \left(\frac{\partial v}{\partial y} + \frac{1}{2} \left(\frac{\partial w}{\partial y} \right)^2 \right)$$

$$+ A_{16} \left(\frac{\partial u}{\partial y} + \frac{\partial v}{\partial x} + \frac{\partial w}{\partial x} \frac{\partial w}{\partial y} \right) + B_{11} \frac{\partial \psi_x}{\partial x} + B_{12} \frac{\partial \psi_y}{\partial y} + B_{16} \left(\frac{\partial \psi_x}{\partial y} + \frac{\partial \psi_y}{\partial x} \right) \Bigg]$$

$$+ \frac{\partial \lambda}{\partial y} \Bigg[A_{16} \left(\frac{\partial u}{\partial x} + \frac{1}{2} \left(\frac{\partial w}{\partial x} \right)^2 \right) + A_{26} \left(\frac{\partial v}{\partial y} + \frac{1}{2} \left(\frac{\partial w}{\partial y} \right)^2 \right) +$$

$$+ A_{66} \left(\frac{\partial u}{\partial y} + \frac{\partial v}{\partial x} + \frac{\partial w}{\partial x} \frac{\partial w}{\partial y} \right) + B_{16} \frac{\partial \psi_x}{\partial x} + B_{26} \frac{\partial \psi_y}{\partial y} + B_{66} \left(\frac{\partial \psi_x}{\partial y} + \frac{\partial \psi_y}{\partial x} \right) \Bigg] \Bigg] dxdy =$$

$$\int_{\Gamma} \lambda \Bigg[A_{11} \left(\frac{\partial u}{\partial x} + \frac{1}{2} \left(\frac{\partial w}{\partial x} \right)^2 \right) + A_{12} \left(\frac{\partial v}{\partial y} + \frac{1}{2} \left(\frac{\partial w}{\partial y} \right)^2 \right) \tag{5.7}$$

$$+ A_{16}\left(\frac{\partial u}{\partial y} + \frac{\partial v}{\partial x} + \frac{\partial w}{\partial x}\frac{\partial w}{\partial y} \right) + B_{11}\frac{\partial \psi_x}{\partial x} + B_{12}\frac{\partial \psi_y}{\partial y} + B_{16}\left(\frac{\partial \psi_x}{\partial y} + \frac{\partial \psi_y}{\partial x} \right)\Bigg] n_x +$$

$$\lambda\Bigg[A_{16}\left(\frac{\partial u}{\partial x} + \frac{1}{2}\left(\frac{\partial w}{\partial x} \right)^2 \right) + A_{26}\left(\frac{\partial v}{\partial y} + \frac{1}{2}\left(\frac{\partial w}{\partial y} \right)^2 \right) + A_{66}\left(\frac{\partial u}{\partial y} + \frac{\partial v}{\partial x} + \frac{\partial w}{\partial x}\frac{\partial w}{\partial y} \right)$$

$$+ B_{16}\frac{\partial \psi_x}{\partial x} + B_{26}\frac{\partial \psi_y}{\partial y} + B_{66}\left(\frac{\partial \psi_x}{\partial y} + \frac{\partial \psi_y}{\partial x} \right)\Bigg] n_y \Bigg] ds + \int_\Omega \left[N_x^T \frac{\partial \lambda}{\partial x} + N_{xy}^T \frac{\partial \lambda}{\partial y} \right] dxdy .$$

The *primary variables* are defined as the dependent variables; u, v, w, ψ_x, and ψ_y. The *secondary variables* are defined from the variational form as the coefficients of λ in the boundary integrals. In Eq. (5.7) the secondary variables are

$$\Bigg[A_{11}\left(\frac{\partial u}{\partial x} + \frac{1}{2}\left(\frac{\partial w}{\partial x} \right)^2 \right) + A_{12}\left(\frac{\partial v}{\partial y} + \frac{1}{2}\left(\frac{\partial w}{\partial y} \right)^2 \right) + A_{16}\left(\frac{\partial u}{\partial y} + \frac{\partial v}{\partial x} + \frac{\partial w}{\partial x}\frac{\partial w}{\partial y} \right)$$

$$+ B_{11}\frac{\partial \psi_x}{\partial x} + B_{12}\frac{\partial \psi_y}{\partial y} + B_{16}\left(\frac{\partial \psi_x}{\partial y} + \frac{\partial \psi_y}{\partial x} \right)\Bigg] n_x \tag{5.8}$$

and

$$\Bigg[A_{16}\left(\frac{\partial u}{\partial x} + \frac{1}{2}\left(\frac{\partial w}{\partial x} \right)^2 \right) + A_{26}\left(\frac{\partial v}{\partial y} + \frac{1}{2}\left(\frac{\partial w}{\partial y} \right)^2 \right) + A_{66}\left(\frac{\partial u}{\partial y} + \frac{\partial v}{\partial x} + \frac{\partial w}{\partial x}\frac{\partial w}{\partial y} \right)$$

$$+ B_{16}\frac{\partial \psi_x}{\partial x} + B_{26}\frac{\partial \psi_y}{\partial y} + B_{66}\left(\frac{\partial \psi_x}{\partial y} + \frac{\partial \psi_y}{\partial x} \right)\Bigg] n_y , \tag{5.9}$$

which are recognized from Eqs. (4.7) as $(N_x + N_{xy})n_x$ and $(N_{xy} + N_y)n_y$. The variational form of Eq. (5.1) can finally be written as

$$\int_{\Omega}\Bigg[\lambda\rho h\frac{\partial^2 u}{\partial t^2}+\frac{\partial\lambda}{\partial x}\Bigg[A_{11}\left(\frac{\partial u}{\partial x}+\frac{1}{2}\left(\frac{\partial w}{\partial x}\right)^2\right)+A_{12}\left(\frac{\partial v}{\partial y}+\frac{1}{2}\left(\frac{\partial w}{\partial y}\right)^2\right)$$

$$+A_{16}\left(\frac{\partial u}{\partial y}+\frac{\partial v}{\partial x}+\frac{\partial w}{\partial x}\frac{\partial w}{\partial y}\right)+B_{11}\frac{\partial\psi_x}{\partial x}+B_{12}\frac{\partial\psi_y}{\partial y}+B_{16}\left(\frac{\partial\psi_x}{\partial y}+\frac{\partial\psi_y}{\partial x}\right)\Bigg]$$

$$+\frac{\partial\lambda}{\partial y}\Bigg[A_{16}\left(\frac{\partial u}{\partial x}+\frac{1}{2}\left(\frac{\partial w}{\partial x}\right)^2\right)+A_{26}\left(\frac{\partial v}{\partial y}+\frac{1}{2}\left(\frac{\partial w}{\partial y}\right)^2\right)+$$

$$A_{66}\left(\frac{\partial u}{\partial y}+\frac{\partial v}{\partial x}+\frac{\partial w}{\partial x}\frac{\partial w}{\partial y}\right)+B_{16}\frac{\partial\psi_x}{\partial x}+B_{26}\frac{\partial\psi_y}{\partial y}+B_{66}\left(\frac{\partial\psi_x}{\partial y}+\frac{\partial\psi_y}{\partial x}\right)\Bigg]\Bigg]dxdy=$$

$$\int_{\Gamma}\lambda[(N_x+N_{xy})n_x+(N_{xy}+N_y)n_y]ds+\int_{\Omega}\left[N_x^T\frac{\partial\lambda}{\partial x}+N_{xy}^T\lambda\frac{\partial\lambda}{\partial y}\right]dxdy$$

The variational forms of Eqs. (5.2) through (5.5) can be derived in a similar manner.

5.2. Interpolation and Approximate Functions

In the finite element method the region being examined is discretized into small finite areas called *elements*. The element boundaries are established by discrete points called *nodes*. Values of the dependent variables (u, v, w, ψ_x, ψ_y) are directly obtained only at the nodes. The values between the nodes are found by interpolation. In the Ritz method [37] the dependent variables for a single element are approximated by

$$u = \sum_{i=1}^{P} u^{(i)} \phi_i \ , \tag{5.11}$$

$$v = \sum_{i=1}^{P} v^{(i)} \phi_i \ , \tag{5.12}$$

$$w = \sum_{i=1}^{P} w^{(i)} \phi_i \ , \tag{5.12}$$

$$\psi_x = \sum_{i=1}^{P} \psi_x^{(i)} \phi_i \ , \tag{5.14}$$

and

$$\psi_y = \sum_{i=1}^{P} \psi_y^{(i)} \phi_i \ , \tag{5.15}$$

where $u^{(i)}$, $v^{(i)}$, $w^{(i)}$, $\psi_x^{(i)}$, and $\psi_y^{(i)}$ are the nodal values at the point (x_i, y_i), the ϕ_i are the *interpolation functions*, and the symbol P represents the number of nodes the element contains. Equations (5.11) through (5.15) are referred to as *approximate functions*. The interpolation functions of Eqs. (5.11) through (5.15) are not unique but must obey to the following criteria:

1. The interpolation functions must be differentiable to the same order as the dependent variables.

2. Any set of interpolation functions $\{\phi_i\}$ must be linearly independent.

3. The set of interpolation functions must be complete; i.e., if the interpolation functions contain a term of the nth degree, they must also contain terms of the $n-1^{st}, n-2^{nd} \ldots$, and 0th degree.

4. Interpolation functions are nonzero only on the element to which they are assigned.

5. An interpolation function ϕ_i is equal to unity at the coordinate x_i, y_i and equal to zero at any other nodal location.

6. At any point x_i, y_i on an element the value of the interpolation functions at that point must sum to unity.

If these criteria are satisfied the element is said to be *conforming* which means that:

1. There are no interelement gaps or overlaps and no sudden changes in slope between elements.

2. Rigid body modes are present; i.e. when the body is in rigid motion the element must exhibit zero strain.

3. The elemental interpolation functions are complete.

Figure 7 shows three master rectangular elements in local Cartesian coordinates which are all conforming elements. The following three sets of interpolation functions correspond to these three elements.

Linear Rectangular Element (4 Nodes)

$$\phi_1 = \frac{1}{4}(1-\zeta)(1-\eta) \ ,$$

$$\phi_2 = \frac{1}{4}(1+\zeta)(1-\eta) \ ,$$

$$\phi_3 = \frac{1}{4}(1-\zeta)(1+\eta) \ ,$$

and

$$\phi_4 = \frac{1}{4}(1+\zeta)(1+\eta) \ .$$

Quadratic Rectangular Element (8 Nodes)

$$\phi_1 = \frac{1}{4}(\zeta^2-\zeta)(\eta^2-\eta) \ ,$$

$$\phi_2 = \frac{1}{4}(\zeta^2+\zeta)(\eta^2-\eta) \ ,$$

$$\phi_3 = \frac{1}{4}(\zeta^2+\zeta)(\eta^2+\eta) \ ,$$

$$\phi_4 = \frac{1}{4}(\zeta^2-\zeta)(\eta^2+\eta) \ ,$$

$$\phi_5 = \frac{1}{2}(1-\zeta^2)(\eta^2-\eta) \ ,$$

$$\phi_6 = \frac{1}{2}(\zeta + \zeta^2)(1 - \eta^2) \ ,$$

$$\phi_7 = \frac{1}{2}(1 - \zeta^2)(\eta^2 + \eta) \ ,$$

and

$$\phi_8 = \frac{1}{2}(\zeta^2 - \zeta)(1 - \eta^2) \ .$$

Quadratic Rectangular Element (9 Nodes)

These are the same as the interpolation functions for the 8-noded element with the addition of

$$\phi_9 = (1 - \zeta^2)(1 - \eta^2) \ .$$

The interpolation functions therefore depend on the element type. The computer code COMMEC2 contained in the appendix is capable of utilizing all of these elements however only results of the analysis using the 9-noded quadratic rectangular element are reported in this thesis.

The test function λ must be capable of satisfying the boundary conditions but other than that it is arbitrary. It is convenient and usual to let the test function assume the same form as the interpolation functions. After this substitution is made along with the substitution of the approximate functions, the variational formulation can be written in matrix form as

$$\begin{bmatrix} M_{ij}^{11} & 0 & 0 & 0 & 0 \\ 0 & M_{ij}^{22} & 0 & 0 & 0 \\ 0 & 0 & M_{ij}^{33} & 0 & 0 \\ 0 & 0 & 0 & M_{ij}^{44} & 0 \\ 0 & 0 & 0 & 0 & M_{ij}^{55} \end{bmatrix} \begin{bmatrix} \ddot{u}_i \\ \ddot{v}_i \\ \ddot{w}_i \\ \ddot{\psi}_{xi} \\ \ddot{\psi}_{yi} \end{bmatrix} +$$

$$\begin{bmatrix} K_{ij}^{11} & K_{ij}^{12} & K_{ij}^{13} & K_{ij}^{14} & K_{ij}^{15} \\ K_{ij}^{21} & K_{ij}^{22} & K_{ij}^{23} & K_{ij}^{24} & K_{ij}^{25} \\ K_{ij}^{31} & K_{ij}^{32} & K_{ij}^{33} & K_{ij}^{34} & K_{ij}^{35} \\ K_{ij}^{41} & K_{ij}^{42} & K_{ij}^{43} & K_{ij}^{44} & K_{ij}^{45} \\ K_{ij}^{51} & K_{ij}^{52} & K_{ij}^{53} & K_{ij}^{54} & K_{ij}^{55} \end{bmatrix} \begin{bmatrix} u_i \\ v_i \\ w_i \\ \psi_{xi} \\ \psi_{yi} \end{bmatrix} = \begin{bmatrix} F_i^1 \\ F_i^2 \\ F_i^3 \\ F_i^4 \\ F_i^5 \end{bmatrix} , \tag{5.16}$$

where

$$M_{ij}^{11} = \int_{\Omega} [\rho h \phi_i \phi_j] dxdy \ ,$$

$$M_{ij}^{22} = M_{ij}^{11} \ ,$$

$$M_{ij}^{33} = M_{ij}^{11} \ ,$$

$$M_{ij}^{44} = \int_{\Omega} \left[\frac{\rho h^3}{12} \phi_i \phi_j \right] dxdy \ ,$$

$$M_{ij}^{55} = M_{ij}^{44} \ .$$

$$K_{ij}^{11} = \int_{\Omega} (A_{11}\phi_{i,x}\phi_{j,x} + A_{16}(\phi_{i,x}\phi_{j,y} + \phi_{i,y}\phi_{j,x}) + A_{66}\phi_{i,y}\phi_{j,y})dxdy \ ,$$

$$K_{ij}^{12} = \int_{\Omega} (A_{12}\phi_{i,x}\phi_{j,y} + A_{16}\phi_{i,x}\phi_{j,x} + A_{26}\phi_{i,y}\phi_{j,y} + A_{66}\phi_{i,y}\phi_{j,x})dxdy \ ,$$

$$K_{ij}^{13} = \frac{1}{2}\int_{\Omega} (A_{11}\phi_{i,x}\phi_{j,x}w_{,x} + A_{12}\phi_{i,x}\phi_{j,y}w_{,y} + A_{26}\phi_{i,y}\phi_{j,y}w_{,y} +$$

$$A_{66}\phi_{i,y}(\phi_{j,x}w_{,y} + \phi_{j,y}w_{,x}) + A_{16}(\phi_{i,x}(\phi_{j,y}w_{,x} + \phi_{j,x}w_{,y}) + \phi_{i,y}\phi_{j,x}w_{,x}))dxdy \ ,$$

$$K_{ij}^{14} = \int_{\Omega} (B_{11}\phi_{i,x}\phi_{j,x} + B_{16}(\phi_{i,x}\phi_{j,y} + \phi_{i,y}\phi_{j,x}) + B_{66}\phi_{i,y}\phi_{j,y})dxdy \ ,$$

$$K_{ij}^{15} = \int_{\Omega} (B_{12}\phi_{i,x}\phi_{j,y} + B_{16}\phi_{i,x}\phi_{j,x} + B_{26}\phi_{i,y}\phi_{j,y} + B_{66}\phi_{i,y}\phi_{j,x})dxdy \ ,$$

$$K_{ij}^{21} = K_{ji}^{12} \ ,$$

$$K_{ij}^{22} = \int_{\Omega} (A_{66}\phi_{i,x}\phi_{j,x} + A_{26}(\phi_{i,x}\phi_{j,y} + \phi_{i,y}\phi_{j,x}) + A_{22}\phi_{i,y}\phi_{j,y})dxdy \ ,$$

$$K_{ij}^{23} = \frac{1}{2}\int_{\Omega} (A_{16}\phi_{i,x}\phi_{j,x}w_{,x} + A_{22}\phi_{i,y}\phi_{j,y}w_{,y} + A_{12}\phi_{i,y}\phi_{j,x}w_{,x} +$$

$$A_{66}\phi_{i,x}(\phi_{j,y}w_{,x} + \phi_{j,x}w_{,y}) + A_{26}(\phi_{i,y}(\phi_{j,y}w_{,x} + \phi_{j,x}w_{,y}) + \phi_{i,x}\phi_{j,y}w_{,y}))dxdy \ ,$$

$$K_{ij}^{24} = \int_{\Omega} (B_{66}\phi_{i,x}\phi_{j,y} + B_{16}\phi_{i,x}\phi_{j,x} + B_{26}\phi_{i,y}\phi_{j,y} + B_{12}\phi_{i,y}\phi_{j,x})dxdy \ ,$$

$$K_{ij}^{25} = \int_{\Omega} (B_{66}\phi_{i,x}\phi_{j,x} + B_{26}(\phi_{i,x}\phi_{j,y} + \phi_{i,y}\phi_{j,x}) + B_{22}\phi_{i,y}\phi_{j,y})dxdy \ ,$$

$$K_{ij}^{31} = 2\, K_{ji}^{13} \ ,$$

$$K_{ij}^{32} = 2\, K_{ji}^{23} \ ,$$

$$K_{ij}^{33} = \frac{1}{2}\int_{\Omega} (A_{11}\phi_{i,x}\phi_{j,x}(w_{,x})^2 + A_{22}\phi_{i,y}\phi_{j,y}(w_{,y})^2 + A_{16}(\phi_{j,y}\phi_{i,x}(w_{,x})^2 + \phi_{j,x}\phi_{i,y}(w_{,x})^2 +$$

$$2\,\phi_{j,x}\phi_{i,x}w_{,x}w_{,y}) + A_{26}(\phi_{j,y}\phi_{i,x}(w_{,y})^2 + \phi_{j,x}\phi_{i,y}(w_{,y})^2 + 2\,\phi_{j,y}\phi_{i,y}w_{,x}w_{,y}) +$$

$$A_{12}(\phi_{j,y}\phi_{i,x}w_{,x}w_{,y} + \phi_{j,x}\phi_{i,y}w_{,x}w_{,y}) + A_{66}(\phi_{i,y}\phi_{j,x}w_{,x}w_{,y} + \phi_{i,x}\phi_{j,y}w_{,x}w_{,y}))dxdy \ ,$$

$$K_{ij}^{34} = \int_{\Omega} (B_{11}\phi_{i,x}\phi_{j,x}w_{,x} + B_{26}\phi_{i,y}\phi_{j,y}w_{,y} + B_{12}\phi_{i,y}\phi_{j,x}w_{,y} + B_{66}\phi_{j,y}(\phi_{i,y}w_{,x} + \phi_{i,x}w_{,y}) +$$

$$B_{16}(\phi_{i,x}(\phi_{j,y}w_{,x} + \phi_{j,x}w_{,y}) + \phi_{j,x}\phi_{i,y}w_{,x}))dxdy \ ,$$

$$K_{ij}^{35} = \int_{\Omega} (B_{16}\phi_{i,x}\phi_{j,x}w_{,x} + B_{22}\phi_{i,y}\phi_{j,y}w_{,y} + B_{12}\phi_{i,x}\phi_{j,y}w_{,x} +$$

$$B_{66}\phi_{j,x}(\phi_{i,y}w_{,x} + \phi_{i,x}w_{,y}) + B_{26}(\phi_{i,y}(\phi_{j,y}w_{,x} + \phi_{j,x}w_{,y}) + \phi_{i,x}\phi_{j,y}w_{,y}))dxdy \ ,$$

$$K_{ij}^{41} = K_{ji}^{14} \ ,$$

$$K_{ij}^{42} = K_{ji}^{24} \ ,$$

$$K_{ij}^{43} = K_{ji}^{34}/2 \ ,$$

$$K_{ij}^{44} = \int_{\Omega} (D_{11}\phi_{i,x}\phi_{j,x} + D_{16}(\phi_{i,x}\phi_{j,y} + \phi_{i,y}\phi_{j,x}) + D_{66}\phi_{i,y}\phi_{j,y})dxdy \ ,$$

$$K_{ij}^{45} = \int_{\Omega} (D_{12}\phi_{i,x}\phi_{j,y} + D_{16}\phi_{i,x}\phi_{j,x} + D_{26}\phi_{i,y}\phi_{j,y} + D_{66}\phi_{i,y}\phi_{j,x})dxdy \ ,$$

$$K_{ij}^{51} = K_{ji}^{15} \ ,$$

$$K_{ij}^{52} = K_{ji}^{25} \ ,$$

$$K_{ij}^{53} = K_{ji}^{35}/2 \ ,$$

$$K_{ij}^{54} = K_{ji}^{45} \ ,$$

$$K_{ij}^{55} = \int_{\Omega} (D_{26}\phi_{i,x}\phi_{j,y} + D_{66}\phi_{i,x}\phi_{j,x} + D_{22}\phi_{i,y}\phi_{j,y} + D_{26}\phi_{i,y}\phi_{j,x})dxdy \ ,$$

$$F_i^1 = -\sum_{j=1}^{P}\int_{\Omega} \phi_i[N_x^T\phi_{j,x} + N_{xy}^T\phi_{j,y}]dxdy \ ,$$

$$F_i^2 = -\sum_{j=1}^{P}\int_{\Omega} \phi_i \left[N_y^T \phi_{j,y} + N_{xy}^T \phi_{j,x}\right] dxdy \ ,$$

$$F_i^3 = -\sum_{j=1}^{P}\int_{\Omega} \phi_i \left[N_x^T \phi_{j,x} w_{,x} + N_{xy}^T (\phi_{j,x} w_{,y} + \phi_{j,y} w_{,y}) + N_y^T \phi_{j,y} w_{,y}\right] dxdy \ ,$$

$$F_i^4 = -\sum_{j=1}^{P}\int_{\Omega} \phi_i \left[M_x^T \phi_{j,x} + M_{xy}^T \phi_{j,y}\right] dxdy \ ,$$

and

$$F_i^5 = -\sum_{j=1}^{P}\int_{\Omega} \phi_i \left[M_y^T \phi_{j,y} + M_{xy}^T \phi_{j,x}\right] dxdy \ .$$

The matrices and vectors of Eq. (5.16) are referred to as the mass matrix [M], the direct stiffness matrix [K], the force vector {F} and the displacement vector {U}, so that Eq. (5.16) can be written

$$[M]\{\ddot{U}\} + [K]\{U\} = \{F\} \ . \tag{5.17}$$

5.3. Gauss-Legendre Quadrature and Reduced Integration

In order to incorporate the approximate and interpolation functions into the variational form, all the functions and areas must be described in the same coordinate sys-

tem. The transformation from the local coordinate system to the global coordinate system is done with the Jacobian matrix. For example,

$$\begin{bmatrix} \dfrac{\partial \phi_i}{\partial \zeta} \\ \\ \dfrac{\partial \phi_i}{\partial \eta} \end{bmatrix} = [J] \begin{bmatrix} \dfrac{\partial \phi_i}{\partial x} \\ \\ \dfrac{\partial \phi_i}{\partial y} \end{bmatrix} ,$$

$$\begin{bmatrix} dx \\ dy \end{bmatrix} = [J]^T \begin{bmatrix} d\zeta \\ d\eta \end{bmatrix} ,$$

and

$$dxdy = |J| d\zeta d\eta \ ,$$

where

$$[J] = \begin{bmatrix} \dfrac{dx}{d\zeta} & \dfrac{dy}{d\zeta} \\ \\ \dfrac{dx}{d\eta} & \dfrac{dy}{d\eta} \end{bmatrix} .$$

The elements used in this thesis are *isoparametric*, meaning that the x- and y-coordinates are approximated using the same nodes and interpolation functions as were used to approximate the dependent variables. Thus

$$x = \sum_{i=1}^{P} x_i \phi_i$$

and $$y = \sum_{i=1}^{P} y_i \phi_i .$$

For computational convenience the Jacobian matrix can be rewritten as

$$[J] = \begin{bmatrix} \frac{\partial \phi_1}{\partial \zeta} & \frac{\partial \phi_2}{\partial \zeta} & \cdots & \frac{\partial \phi_n}{\partial \zeta} \\ \frac{\partial \phi_1}{\partial \eta} & \frac{\partial \phi_2}{\partial \eta} & \cdots & \frac{\partial \phi_n}{\partial \eta} \end{bmatrix} \begin{bmatrix} x_1 & y_1 \\ x_2 & y_2 \\ \cdot & \cdot \\ \cdot & \cdot \\ x_n & y_n \end{bmatrix} .$$

A wide variety of numerical integration methods is available to evaluate the integrands of the previous equations. Gauss-Legendre quadrature is one of the most widely used and has proven to be reliable. For any function G(x) the integral can be found by

$$\int_a^b \int_c^d G(x,y)dxdy = \int_{-1}^{1} \int_{-1}^{1} G(\zeta, \eta)|J| d\eta d\zeta = \sum_{i=1}^{GP} \sum_{j=1}^{GP} G(\zeta, \eta)\omega_i \omega_j |J| , \qquad (5.18)$$

where ζ and η are the so-called Gauss points in the local system (roots of the Legendre polynomial), ω_i and ω_j are weight factors, and $|J|$ is the determinant of the Jacobian matrix. The integral of a polynomial of the nth degree can be found if the number of Gauss points is greater than or equal to $(n+1)/2$ [38].

Although the integral can be evaluated using the Gauss-Legendre quadrature, the terms in Eq. (5.16) involving A_{44}, A_{45}, and A_{55} are still erroneous. This is because the problem under consideration is based on two-dimensional plate theory, but the trans-

verse shear terms are included. The result is that these terms are too stiff in the finite element model. In other words, the solution to the governing equations is dominated by the presence of the shear deformation terms regardless of their value. Zienkiewicz, Taylor, and Too [24] addressed this problem and developed a solution, called *reduced integration*, which is very simple to employ. The first step in reduced integration is to separate the transverse shear terms from the tangent stiffness matrix. These terms are

$$G_{ij}^{33} = \int_{\Omega} [A_{55}\phi_{i,x}\phi_{j,x} + A_{44}\phi_{i,y}\phi_{j,y} + A_{45}(\phi_{i,y}\phi_{j,x} + \phi_{i,x}\phi_{j,y})]dxdy \ ,$$

$$G_{ij}^{34} = \int_{\Omega} [A_{55}\phi_{i,x}\phi_{j} + A_{45}\phi_{i,y}\phi_{j}]dxdy \ ,$$

$$G_{ij}^{35} = \int_{\Omega} [A_{45}\phi_{i,x}\phi_{j} + A_{44}\phi_{i,y}\phi_{j}]dxdy \ ,$$

$$G_{ij}^{43} = \int_{\Omega} [A_{55}\phi_{j,x}\phi_{i} + A_{45}\phi_{j,y}\phi_{i}]dxdy \ ,$$

$$G_{ij}^{44} = \int_{\Omega} [A_{55}\phi_{j}\phi_{i}]dxdy \ ,$$

$$G_{ij}^{45} = \int_{\Omega} [A_{45}\phi_{j}\phi_{i}]dxdy \ ,$$

$$G_{ij}^{53} = \int_{\Omega} [A_{45}\phi_{j,x}\phi_i + A_{44}\phi_{j,y}\phi_i]dxdy \ ,$$

$$G_{ij}^{54} = \int_{\Omega} [A_{45}\phi_j\phi_i]dxdy \ ,$$

and

$$G_{ij}^{55} = \int_{\Omega} [A_{55}\phi_j\phi_i]dxdy \ .$$

Instead of using $(n+1)/2$ Gauss points, as is done when finding the exact solution, the transverse shear terms are integrated using one less Gauss point. This relaxes the stiffness and gives a better weighting to those terms.

5.4. The Transient Solution (Newmark Method)

There are many choices of numerical solutions to the transient problem represented by Eq. (5.12). However, the Newmark method is one of the most reliable and is unconditionally stable. In the Newmark method the essential boundary conditions and their derivatives with respect to time at the $n+1^{n}$ time step are given by

$$\{U\}^{n+1} = \{U\}^{n} + \{\dot{U}\}^{n}\Delta t + 0.25[\{\ddot{U}\}^{n} + \{\ddot{U}\}^{n+1}](\Delta t)^2 \ , \tag{5.19}$$

and

$$\{\dot{U}\}^{n+1} = \{\dot{U}\}^{n} + 0.5[\{\ddot{U}\}^{n} + \{\ddot{U}\}^{n+1}]\Delta t \ , \tag{5.20}$$

where now U represents any one of the dependent variables. Solving for $\{\ddot{U}\}^{n+1}$,

$$\{\ddot{U}\}^{n+1} = [\{U\}^{n+1} - \{U\}^{n}]\frac{4}{(\Delta t)^2} - \frac{4}{\Delta t}\{\dot{U}\}^{n} - \{\ddot{U}\}^{n} \ . \tag{5.21}$$

Now multiplying both sides of Eq. (5.21) by the mass matrix $[M]^{n+1}$ yields

$$[M]^{n+1}\{\ddot{U}\}^{n+1} = [M]^{n+1}[\{U\}^{n+1} - \{U\}^{n}]\frac{4}{(\Delta t)^2} - \frac{4}{\Delta t}[M]^{n+1}\{\dot{U}\}^{n} - [M]^{n+1}\{\ddot{U}\}^{n}. \tag{5.22}$$

However,

$$[M]^{n+1}\{\ddot{U}\}^{n+1} = \{F\}^{n+1} - [K]^{n+1}\{U\}^{n+1}, \tag{5.23}$$

so that Eq. (5.22) can now be written

$$[[K] + a_0[M]]^{n+1}\{U\}^{n+1} = \{F\}^{n+1} + \left[a_0\{U\}^{n} + a_1\{\dot{U}\}^{n} + \{\ddot{U}\}^{n}\right][M]^{n+1} \ ,$$

where $a_0 = \frac{4}{(\Delta t)^2}$ and $a_1 = \frac{4}{\Delta t}$. For simplification in notation let

$$[\overline{K}] = ([K] + a_0[M])^{n+1}$$

and

$$\{\overline{F}\} = \{F\}^{n+1} + \left[a_0\{U\}^{n} + a_1\{\dot{U}\}^{n} + \{\ddot{U}\}^{n}\right][M]^{n+1} \ .$$

Then

$$[\overline{K}]\{U\}^{n+1} = \{\overline{F}\}^{n+1} \ .$$

5.5. Newton-Raphson Method

The Newton-Raphson method of iteration is a very fast and accurate scheme for solving nonlinear problems. The theory is as follows. Consider a residual vector $\{R\}$ such that at the rth iteration

$$\{R\}^r = [\overline{K}]^r\{U\}^r - \{\overline{F}\}. \tag{5.24}$$

When the solution finally converges the residual matrix ideally would be zero. The residual matrix on the iteration after the rth iteration will be

$$\{R\}^{r+1} = \{R\}^r + \frac{\partial\{R\}^r}{\partial\{U\}^r}\left[U^{r+1} - U^r\right]. \tag{5.25}$$

If $\{R\}^{r+1}$ is set to zero, Eq. (5.25) can be written as

$$\frac{\partial\{R\}^r}{\partial\{U\}^r}\left[U^{r+1} - U^r\right] = -\{R\}^r \ , \tag{5.26}$$

where

$$[K^T] = \frac{\partial\{R\}^r}{\partial\{U\}^r} = \frac{\partial}{\partial\{U\}^r}([K]^r\{U\}^r) \tag{5.27}$$

and is commonly called the tangent stiffness matrix. Unlike the direct stiffness matrix $[K]$, the tangent stiffness matrix, $[K^T]$ is symmetric. The individual terms of the tangent stiffness matrix can be written in terms of the direct stiffness matrix and mass matrix:

$$K_{ij}^{T11} = K_{ij}^{D11} + M_{ij}^{11} \ , \qquad K_{ij}^{T12} = K_{ij}^{D12} \ , \qquad K_{ij}^{T13} = 2K_{ij}^{D13} \ ,$$

$$K_{ij}^{T14} = K_{ij}^{D14} \ , \qquad K_{ij}^{T15} = K_{ij}^{D15} \ , \qquad K_{ij}^{T22} = K_{ij}^{D22} + M_{ij}^{22} \ ,$$

$$K_{ij}^{T23} = 2K_{ij}^{D23} \ , \qquad K_{ij}^{T24} = K_{ij}^{D24} \ , \qquad K_{ij}^{T25} = K_{ij}^{D25} \ ,$$

$$K_{ij}^{T33} = K_{ij}^{D33} + M_{ij}^{33} + H_{ij} \ , \qquad K_{ij}^{T34} = K_{ij}^{D34} \ , \qquad K_{ij}^{T35} = K_{ij}^{D35} \ ,$$

$$K_{ij}^{T44} = K_{ij}^{D44} + M_{ij}^{44} \ , \ K_{ij}^{T45} = K_{ij}^{D45} \ ,$$

and

$$K_{ij}^{T55} = K_{ij}^{D55} + M_{ij}^{55} \ ,$$

where

$$H_{ij} = \int_{\Omega} \Bigg[A_{11} \Bigg[\left(\frac{\partial w}{\partial x} \right)^2 \frac{\partial \phi_i}{\partial x} \frac{\partial \phi_j}{\partial x} + \frac{\partial u}{\partial x} \frac{\partial \phi_i}{\partial x} \frac{\partial \phi_j}{\partial x} \Bigg] + A_{12} \Bigg[\frac{\partial u}{\partial x} \frac{\partial \phi_i}{\partial y} \frac{\partial \phi_j}{\partial y} +$$

$$\frac{\partial v}{\partial y} \frac{\partial \phi_i}{\partial x} \frac{\partial \phi_j}{\partial x} + \frac{1}{2} \frac{\partial w}{\partial y} \frac{\partial w}{\partial x} \frac{\partial \phi_i}{\partial x} \frac{\partial \phi_j}{\partial y} + \frac{1}{2} \left(\frac{\partial w}{\partial x} \right)^2 \frac{\partial \phi_i}{\partial y} \frac{\partial \phi_j}{\partial y} +$$

$$\frac{1}{2} \frac{\partial w}{\partial y} \frac{\partial w}{\partial x} \frac{\partial \phi_i}{\partial y} \frac{\partial \phi_j}{\partial x} + \frac{1}{2} \left(\frac{\partial w}{\partial x} \right)^2 \frac{\partial \phi_i}{\partial y} \frac{\partial \phi_j}{\partial y} \Bigg] + A_{16} \Bigg[\frac{\partial u}{\partial y} \frac{\partial \phi_i}{\partial x} \frac{\partial \phi_j}{\partial y} +$$

$$\frac{\partial u}{\partial x} \frac{\partial \phi_i}{\partial x} \frac{\partial \phi_j}{\partial y} + \frac{\partial u}{\partial x} \frac{\partial \phi_i}{\partial y} \frac{\partial \phi_j}{\partial x} + \frac{\partial v}{\partial x} \frac{\partial \phi_i}{\partial x} \frac{\partial \phi_j}{\partial x} + 2 \frac{\partial w}{\partial x} \frac{\partial w}{\partial y} \frac{\partial \phi_i}{\partial x} \frac{\partial \phi_j}{\partial x} +$$

$$\left(\frac{\partial w}{\partial x} \right)^2 \frac{\partial \phi_i}{\partial x} \frac{\partial \phi_j}{\partial y} + \left(\frac{\partial w}{\partial x} \right)^2 \frac{\partial \phi_i}{\partial y} \frac{\partial \phi_j}{\partial x} \Bigg] + A_{26} \Bigg[\frac{\partial u}{\partial y} \frac{\partial \phi_i}{\partial y} \frac{\partial \phi_j}{\partial y} +$$

$$\frac{\partial v}{\partial y}\frac{\partial \phi_i}{\partial y}\frac{\partial \phi_j}{\partial x}+\frac{\partial v}{\partial y}\frac{\partial \phi_i}{\partial x}\frac{\partial \phi_j}{\partial y}+\frac{\partial v}{\partial x}\frac{\partial \phi_i}{\partial y}\frac{\partial \phi_j}{\partial y}+\left(\frac{\partial w}{\partial y}\right)^2\frac{\partial \phi_i}{\partial x}\frac{\partial \phi_j}{\partial y}+$$

$$\left(\frac{\partial w}{\partial y}\right)^2\frac{\partial \phi_i}{\partial y}\frac{\partial \phi_j}{\partial x}\Bigg]+A_{66}\Bigg[\frac{\partial u}{\partial y}\frac{\partial \phi_i}{\partial x}\frac{\partial \phi_j}{\partial x}+\frac{\partial u}{\partial y}\frac{\partial \phi_i}{\partial y}\frac{\partial \phi_j}{\partial y}+\frac{\partial v}{\partial x}\frac{\partial \phi_i}{\partial x}\frac{\partial \phi_j}{\partial y}$$

$$+\frac{\partial v}{\partial x}\frac{\partial \phi_i}{\partial y}\frac{\partial \phi_j}{\partial x}+\left(\frac{\partial w}{\partial y}\right)^2\frac{\partial \phi_i}{\partial x}\frac{\partial \phi_j}{\partial x}+\left(\frac{\partial w}{\partial x}\right)^2\frac{\partial \phi_i}{\partial y}\frac{\partial \phi_j}{\partial y}+\frac{\partial w}{\partial x}\frac{\partial w}{\partial y}\frac{\partial \phi_i}{\partial x}\frac{\partial \phi_j}{\partial y}$$

$$+\frac{\partial w}{\partial x}\frac{\partial w}{\partial y}\frac{\partial \phi_i}{\partial y}\frac{\partial \phi_j}{\partial x}\Bigg]+A_{22}\left(\frac{\partial w}{\partial y}\right)^2\frac{\partial \phi_i}{\partial y}\frac{\partial \phi_j}{\partial y}+B_{11}\frac{\partial \psi_x}{\partial x}\frac{\partial \phi_i}{\partial x}\frac{\partial \phi_j}{\partial x}+$$

$$B_{12}\Bigg[\frac{\partial \psi_y}{\partial x}\frac{\partial \phi_i}{\partial x}\frac{\partial \phi_j}{\partial x}+\frac{\partial \psi_x}{\partial x}\frac{\partial \phi_i}{\partial y}\frac{\partial \phi_j}{\partial y}\Bigg]+B_{16}\Bigg[\frac{\partial \psi_x}{\partial y}\frac{\partial \phi_i}{\partial x}\frac{\partial \phi_j}{\partial x}+$$

$$\frac{\partial \psi_x}{\partial x}\frac{\partial \phi_i}{\partial x}\frac{\partial \phi_j}{\partial y}+\frac{\partial \psi_x}{\partial x}\frac{\partial \phi_i}{\partial y}\frac{\partial \phi_j}{\partial x}+\frac{\partial \psi_y}{\partial x}\frac{\partial \phi_i}{\partial x}\frac{\partial \phi_j}{\partial y}\Bigg]+B_{26}\Bigg[\frac{\partial \psi_x}{\partial y}\frac{\partial \phi_i}{\partial y}\frac{\partial \phi_j}{\partial y}$$

$$+\frac{\partial \psi_y}{\partial y}\frac{\partial \phi_i}{\partial x}\frac{\partial \phi_i}{\partial y}+\frac{\partial \psi_y}{\partial y}\frac{\partial \phi_i}{\partial y}\frac{\partial \phi_j}{\partial x}+\frac{\partial \psi_y}{\partial x}\frac{\partial \phi_i}{\partial y}\frac{\partial \phi_j}{\partial y}\Bigg]+B_{66}\Bigg[\frac{\partial \psi_x}{\partial y}\frac{\partial \phi_i}{\partial x}\frac{\partial \phi_j}{\partial y}$$

$$+\frac{\partial \psi_x}{\partial y}\frac{\partial \phi_i}{\partial y}\frac{\partial \phi_j}{\partial x}+\frac{\partial \psi_y}{\partial x}\frac{\partial \phi_i}{\partial x}\frac{\partial \phi_j}{\partial y}+\frac{\partial \psi_y}{\partial x}\frac{\partial \phi_i}{\partial y}\frac{\partial \phi_j}{\partial x}\Bigg]\Bigg]dxdy\ .$$

Equation (5.26) can now be written as

$$[K^T]\{U^{r+1}-U^r\}=\{\overline{F}\}-[\overline{K}]^r\{U\}^r\ . \tag{5.28}$$

Given the initial displacements, velocities, and accelerations, Eq. (5.28) can be numerically solved for any other displacements, velocities, or accelerations in time.

6. Verification of Model and Results

The results predicted by the finite element model are presented and compared to known results of plate problems. In order to verify the finite element model, discrete boundary conditions are applied to plates of various geometries and the known results are compared to those predicted by the model. Each condition verifies an aspect of the model and demonstrates its capabilities. The conditions are:

- Simply-supported isotropic plate subjected to a uniformly-distributed transverse mechanical load at steady state.

- Clamped composite plate subjected to a uniformly-distributed transverse mechanical load at steady state.

- Simply-supported isotropic plate subjected to a linear temperature variation through the thickness of the plate (steady state).

- Simply-supported isotropic plate subjected to a sudden uniformly-distributed transverse mechanical load (transient).

- Simply-supported laminated composite plate subjected to a sudden uniformly-distributed transverse mechanical load (transient).

- Simply-supported composite plate subjected to a sudden heat flux on the upper surface (transient).

Each case is analyzed with a finite element model of four quadrilateral 9-node elements as shown in Fig. 8.

6.1. Static Mechanical Load

Numerical results are presented in this section for a simply-supported isotropic plate under uniformly distributed static loads and for a clamped laminated plate under the same loading.

The geometry and boundary conditions of the rectangular isotropic plate are shown in Fig. 9. Because of the biaxial symmetry only the first quadrant of the plate must be modeled. The isotropic material properties are $E = 21.0$ GPa, and $\nu = 0.3$.

An analytical solution for a simply supported rectangular isotropic plate with uniform transverse loading is available for comparison. However, the analytical theory is based on a linear relationship between the deflection in the z-direction and the transverse load and therefore it is limited to the case of a thin plate with small deflections. For the case of a square plate with $\nu = 0.3$ the analytical theory gives a maximum deflection at the center of the plate of

$$w_{max} = 0.0443 \frac{p_o a^4}{Eh^3} .$$

Figure 10 shows the normalized maximum deflections versus the plate width-to-depth (a/h) ratio of three theories. The continuous line represents the thin plate theory [39] and the dashed line represents the first-order SDT finite element solution of this thesis. The results of a higher-order shear deformation theory of Reddy [22] are indicated with the triangles. The deflections in Fig. 10 are normalized as

$$\overline{w} = \frac{wEh^3}{p_o a^4} \quad .$$

The finite element solutions agree with the linear theory until the width-to-depth ratio becomes less than about 10. At this point thin plate theory breaks down because it assumes that the in-plane loads are negligible. However, as the width-to-depth ratio becomes small more of the load is being carried in-plane and less transversely. Because the finite element solutions have incorporated this coupling between the deflections in the u-, y-, and z-directions they diverge from the linear solution. The two finite element solutions agree within 0.1 percent difference.

The geometry and boundary conditions of the laminated composite plate are shown in Fig. 11. The plate is symmetric about the x-y plane with a 0° and a 90° layer of equal thickness above and below the midplane; i.e. a [0/90/90/0] layup. It is clamped on all edges and subjected to uniformly-distributed transverse load. The orthotropic properties of the laminae are

$$E_{11} = 12.605 \text{ GPa}, \quad E_{22} = 12.628 \text{ GPa}, \quad E_{33} = 12.628 \text{ GPa},$$

$$\nu_{12} = 0.23949,$$

$$G_{12} = 2.155 \text{ GPa}, \quad G_{31} = 2.155 \text{ GPa}, \quad \text{and } G_{23} = 2.155 \text{ GPa}.$$

The finite element model results are compared to the linear solution of Zaghloul and Kennedy [40] in Fig. 12. Experimental results are also available for this case [40] as well as results from a higher-order finite element model [22]. The dot-dashed line in Fig. 12 represents the linear solution, the dashed line is the experimental data, and the solid line is the SDT finite element solution from this thesis. The triangles represent the values from the higher-order finite element model [22]. Again the nonlinear and linear solutions converge for small loads. But now it can also be seen that the experimental solution agrees very well with the finite element solutions. The small discrepancies that occur between the two finite element solutions and the experimental results may be due to a number of things, including errors in modeling experimental boundary conditions. Another important result is the agreement between the higher-order finite element model and the first-order model of this thesis. The deflections differ by less than 0.01 percent.

6.2. Linear Temperature Variation Through an Isotropic Plate

The nonlinearity of the plate deflection due to a thermal load is demonstrated using a simply-supported isotropic plate. The boundary conditions and geometry of the plate are shown in Fig. 9 ($a = 25.4$ cm), and the material properties are $E = 68.9$ GPa, $\nu = 0.3$, and $\alpha = 0.000124$ m/m/°C. The midplane of the plate is kept at the stress-free temperature and the temperature varies linearly through the thickness of the plate and is uniform on any x-y plane. Figure 13. shows the nondimensional deflections versus the width-to-depth ratio (a/h). The deflection in nondimensional form is

$$\overline{w} = \frac{10.4wh}{\alpha a^2 \Delta T} ,$$

where ΔT is the temperature difference between the top and bottom surfaces, α is the coefficient of thermal expansion, and w is the actual deflection. The solid line in Fig. 13 depicts the thin-plate small-deflection solution [41]. When the temperature variation is small producing small deflections the finite element predictions agree with the thin-plate small-deflection theory. The dashed line in Fig. 13 shows the nondimensional finite element solution when the temperature difference between the top surface and bottom surface is $500°C$. Again the effects of the nonlinear strains are shown in Fig. 13. As the width-to-depth ratio becomes small the nonlinear and linear solutions converge.

6.3. Transient Mechanical Load

The ability to accurately predict deflections as a function of time due to a uniformly-distributed transverse load is demonstrated for a simply-supported isotropic square plate and laminated composite square plate. The isotropic material properties are $E = 2.1$ GPa, $\nu = 0.3$, and $\rho = 800.0$ kg/m^3. The plate is 5.0 cm thick and 25.0 cm wide and suddenly subjected to a 100 kPa uniform transverse load. The deflections through half of a cycle are shown in Fig. 14. The solid line represents the solution using the present first-order SDT model and the triangles represent the results using another first-order SDT finite element model [42]. There is no appreciable difference in the two finite element solutions.

Figure 15 shows the center deflection versus time of a [0/90/0] laminated composite plate under the same 100 kPa load. The laminated plate is 5.0 cm thick and 25.0 cm square and the lamina material properties are

$$E_{11} = 52.1 \text{ GPa}, \quad E_{22} = 2.1 \text{ GPa}, \quad E_{33} = 2.1 \text{ GPa},$$

$$\nu_{12} = 0.3,$$

$$G_{12} = 1.05\,\text{GPa}, \quad G_{31} = 1.05\,\text{GPa}, \quad G_{23} = 1.05\,\text{GPa}.$$

It can be seen in Fig. 15 that the SDT finite element solution from the literature [42] again agrees well with the results obtained using the first-order SDT model of this thesis.

6.4. Transient Thermal Load

The first-order SDT finite element model is shown to accurately predict the time-dependent deflections caused by a nonuniform heat flux. The predictions are compared to the solution of a three-dimensional finite element model [31]. Since the finite element model of this thesis does not have the capability to perform heat conduction calculations, the temperature field calculated by the three-dimensional model is read into the model at time steps of $\Delta t = 0.075$seconds. The comparison is made on a simply-supported square [0/90/90/0] laminated composite plate of thickness 0.005 m and 0.020 m width, as shown in Fig. 16. The lamina material properties of the plate are

$$E_{11} = 132.0\,\text{GPa}, \quad E_{22} = 10.8\,\text{GPa}, \quad E_{33} = 10.8\,\text{GPa},$$

$$\nu_{12} = .24,$$

$$G_{12} = 5.7\,\text{GPa}, \quad G_{31} = 5.7\,\text{GPa}, \quad G_{23} = 3.6\,\text{GPa}.$$

The plate is subjected to a nonuniform heat flux on the upper surface described by

$$q = 30(1 - 1250(x^2 + y^2))\ \text{kW/m}^2\ .$$

Figure 17 shows the center deflections of the plate caused by the time-dependant thermal load. The solid line shows the first-order SDT finite element solution and the dashed line represents the three-dimensional finite element solution. Because the inertia effects are extremely small the plate response is dominated by the thermal load. The two finite element solutions differ by about 5.0 percent. There are probably two reasons for this difference:

1. The differences that arise in simulating the boundary conditions of a two-dimensional plate and a three-dimensional plate.

2. The three-dimensional finite element theory permits strains in the z-direction; in other words the plate can become thinner. The two-dimensional theory does not permit transverse strains.

7. Conclusions and Recommendations

The first-order SDT finite element model predicts the deflections of the isotropic and laminated composite plates very accurately under steady-state and transient thermal and mechanical loads. In all cases presented in this thesis the first-order SDT solution agrees with the other two-dimensional finite element solutions and is very close to the three-dimensional finite element solution for transient thermal problems.

The convergence of the model is very fast using the Newton-Raphson method. No more than 3 iterations were ever needed; thus, CPU time requirements are very small. The finite element model should be improved by including the capability to perform heat conduction calculations. Also, to correctly predict the dynamic response of nonsymmetric laminates, rotary inertia terms must also be included. In order to fully predict laminate behavior a postprocessor must be added in which the laminate stresses are calculated. With these modifications the model will be a very valuable tool in predicting laminated composite plate behavior.

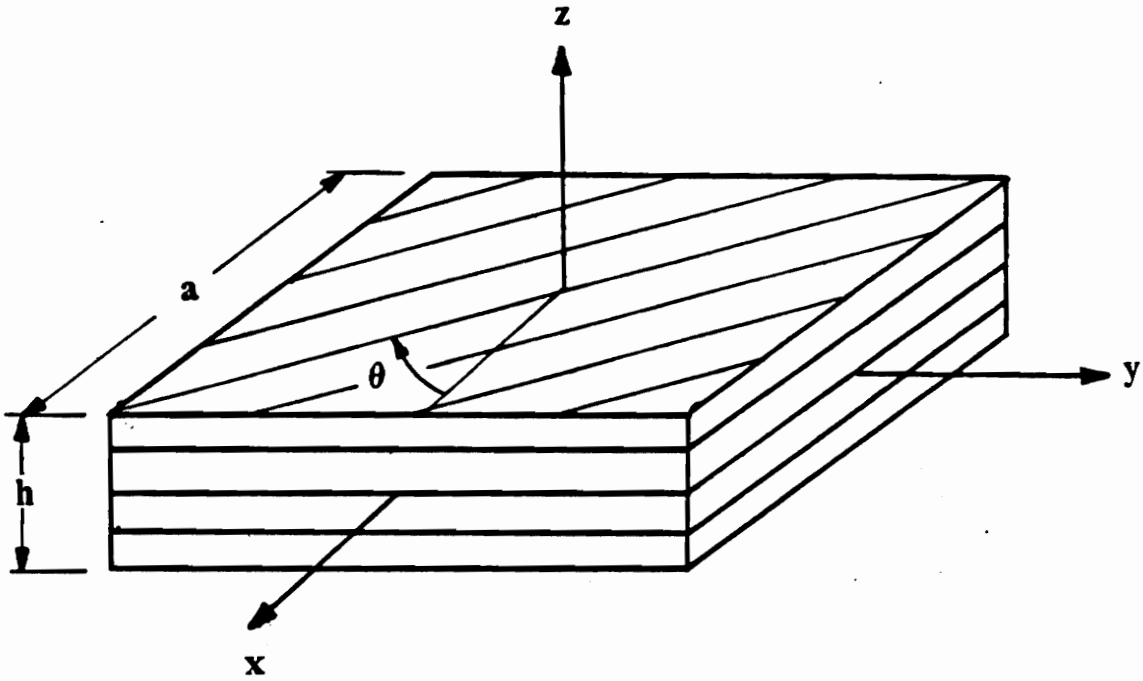

Fig. 1. Typical Laminated Composite Plate.

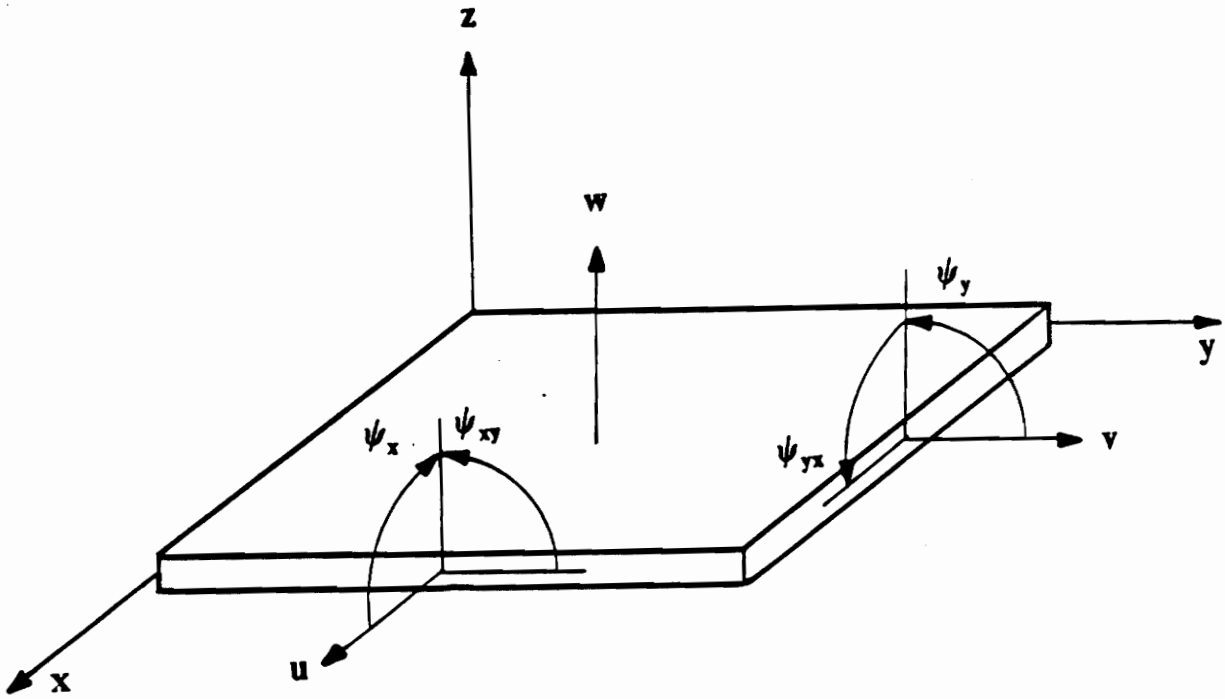

Fig. 2. Plate Element with Seven Degrees of Freedom, Three Translations, and Four Rotations.

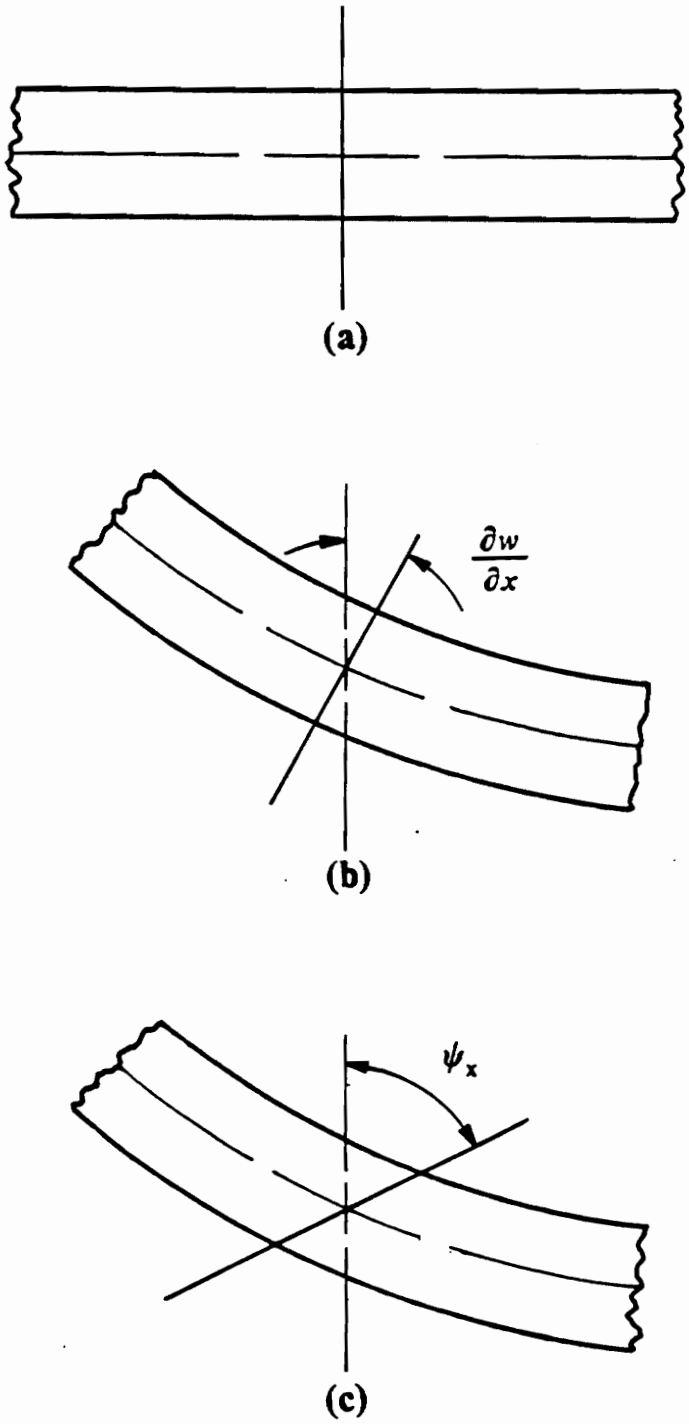

Fig. 3 (a) Undeformed Laminated Plate, (b) Deformed Laminated Plate with CLT Displacement Field, (c) Deformed Laminated Plate with First-Order SDT Displacement Field.

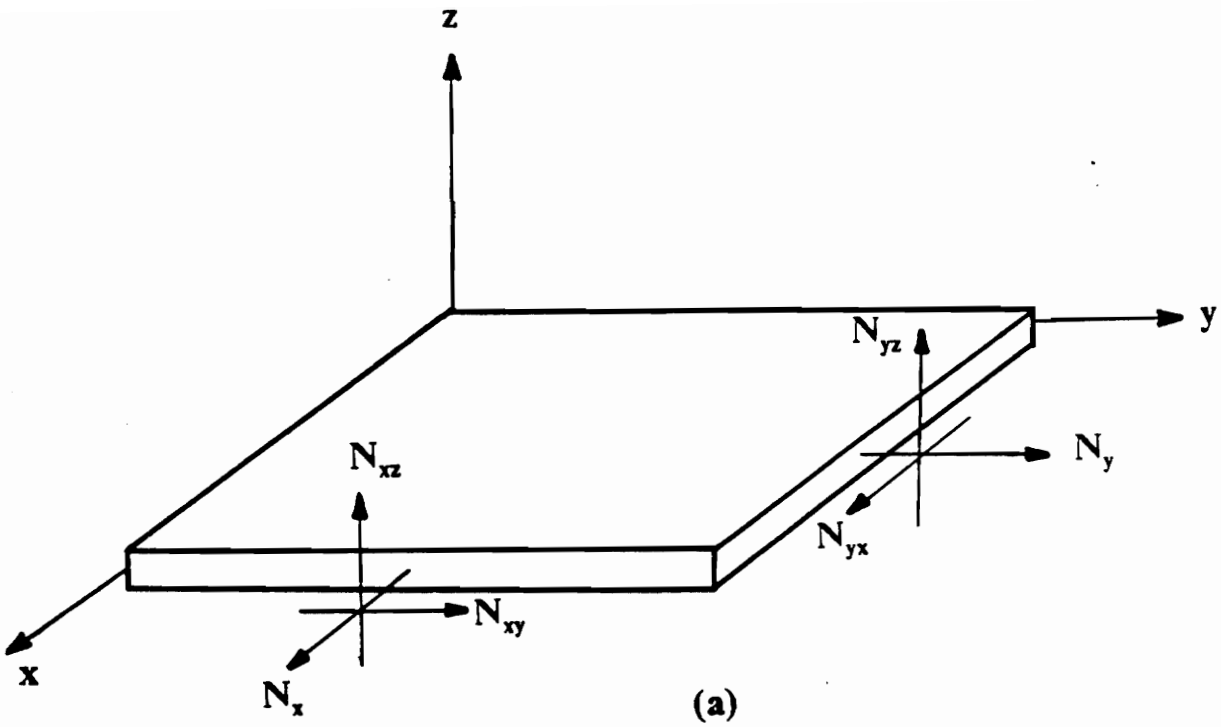

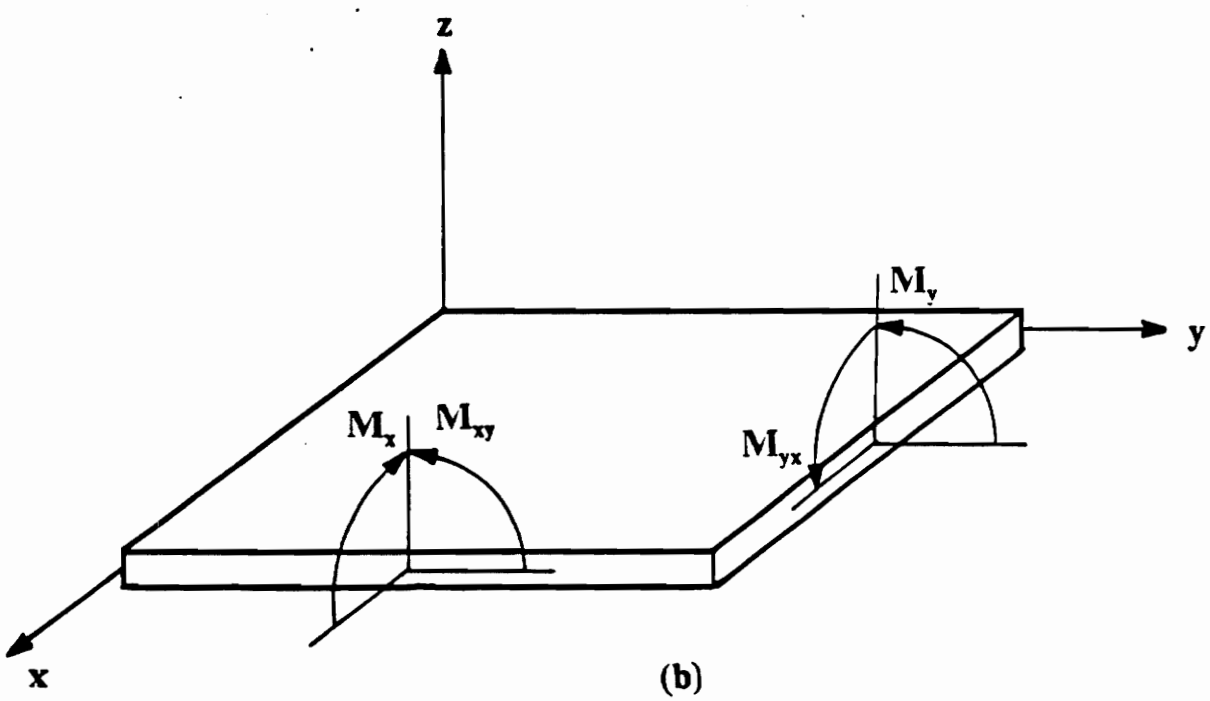

Fig. 4. (a) Forces and (b) Moments on the Laminated Plate.

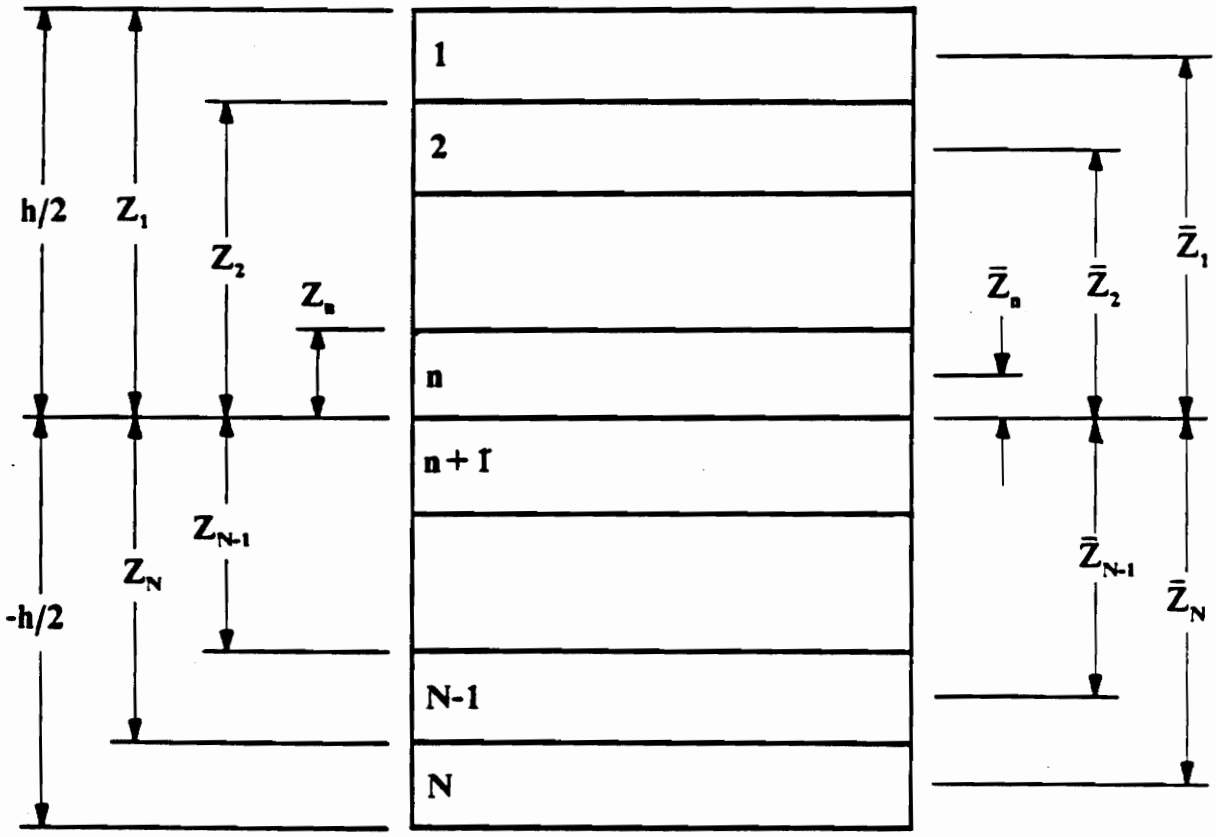

Fig. 5. Laminate Coordinate System and Nomenclature.

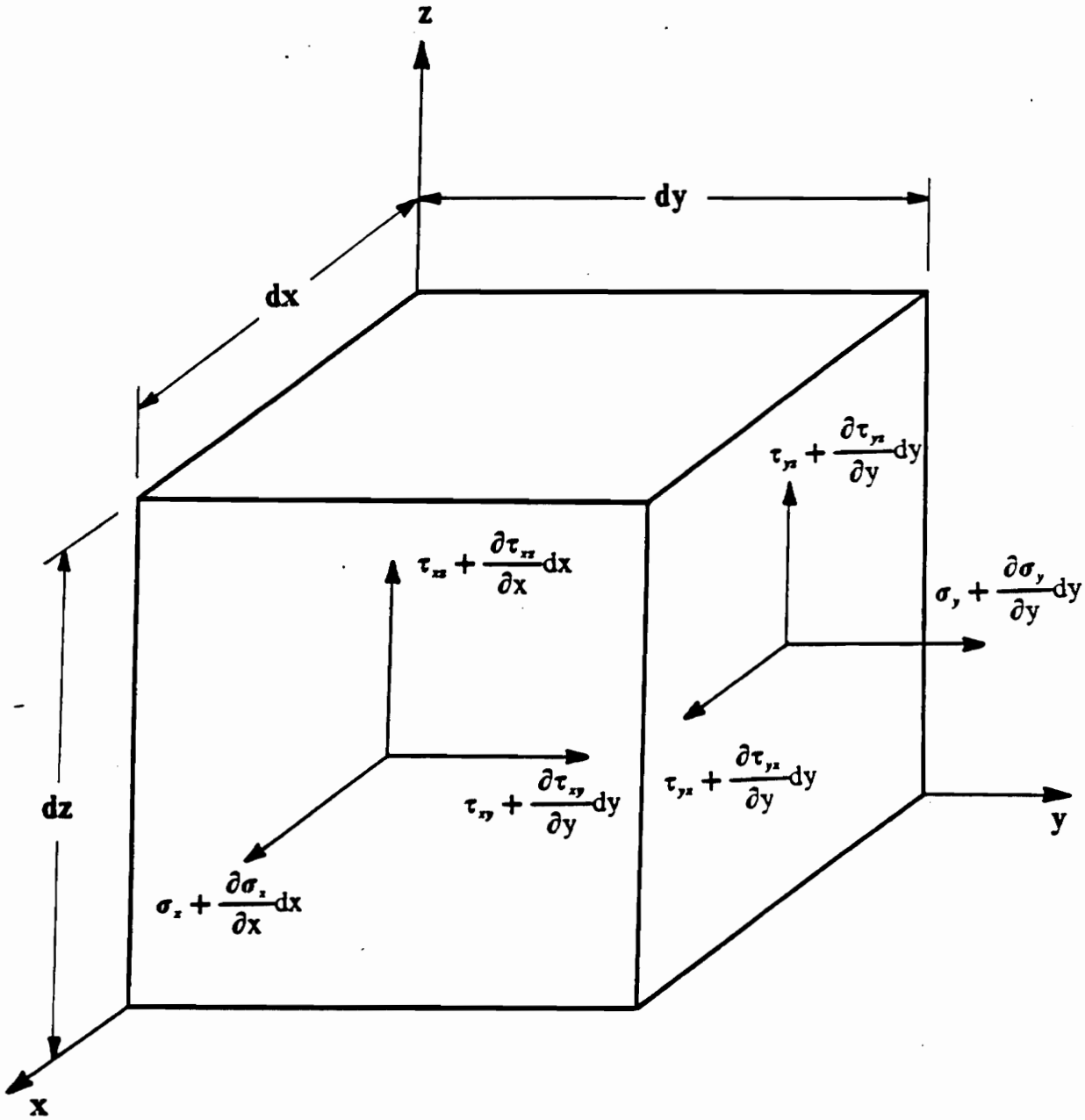

Fig. 6. Typical Infinitesimal Cube of Laminated Composite Plate.

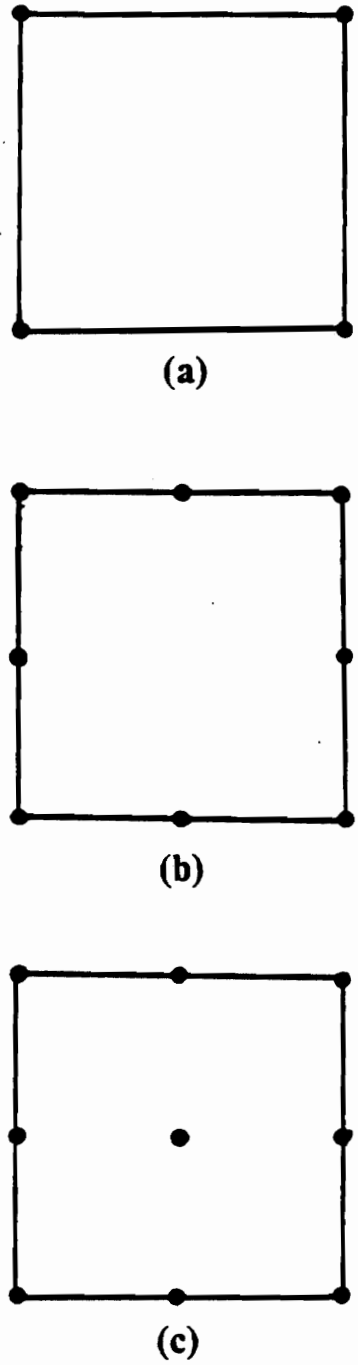

Fig. 7. Master Elements for (a) 4-Node Rectangular (b) 8-Node Rectangular, and (c) 9-Node Rectangular Elements.

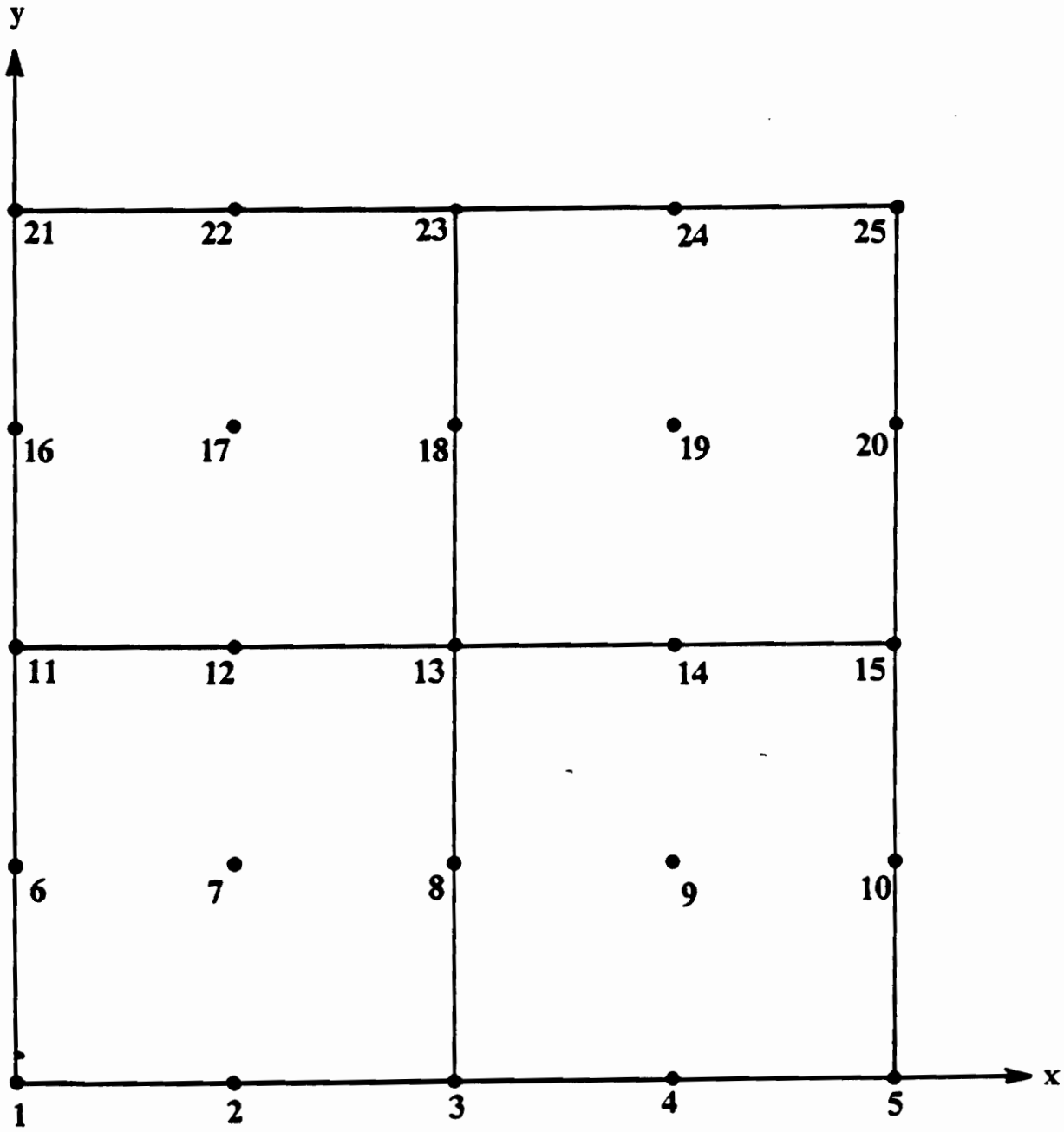

Fig. 8. Finite Element Mesh used in the Plate Analysis, Four 9-Node Quadrilateral Elements.

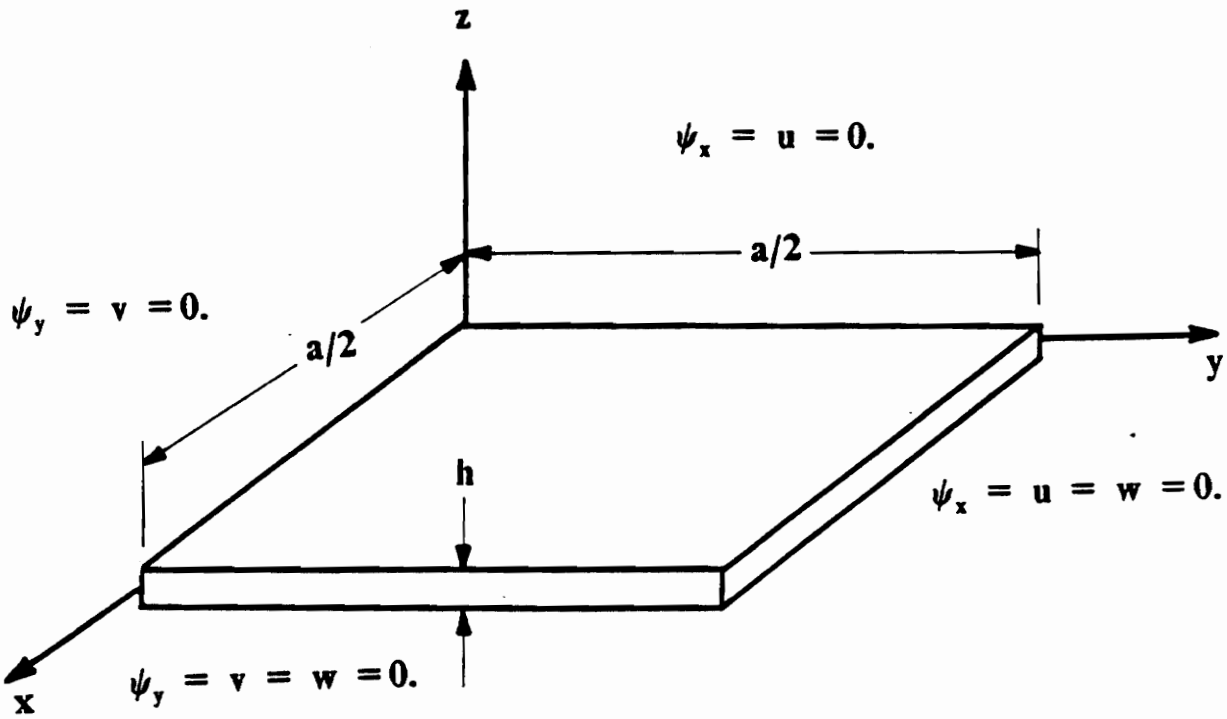

Fig. 9. Geometry and Boundary Conditions of the First Quadrant of a Simply-Supported Square Plate.

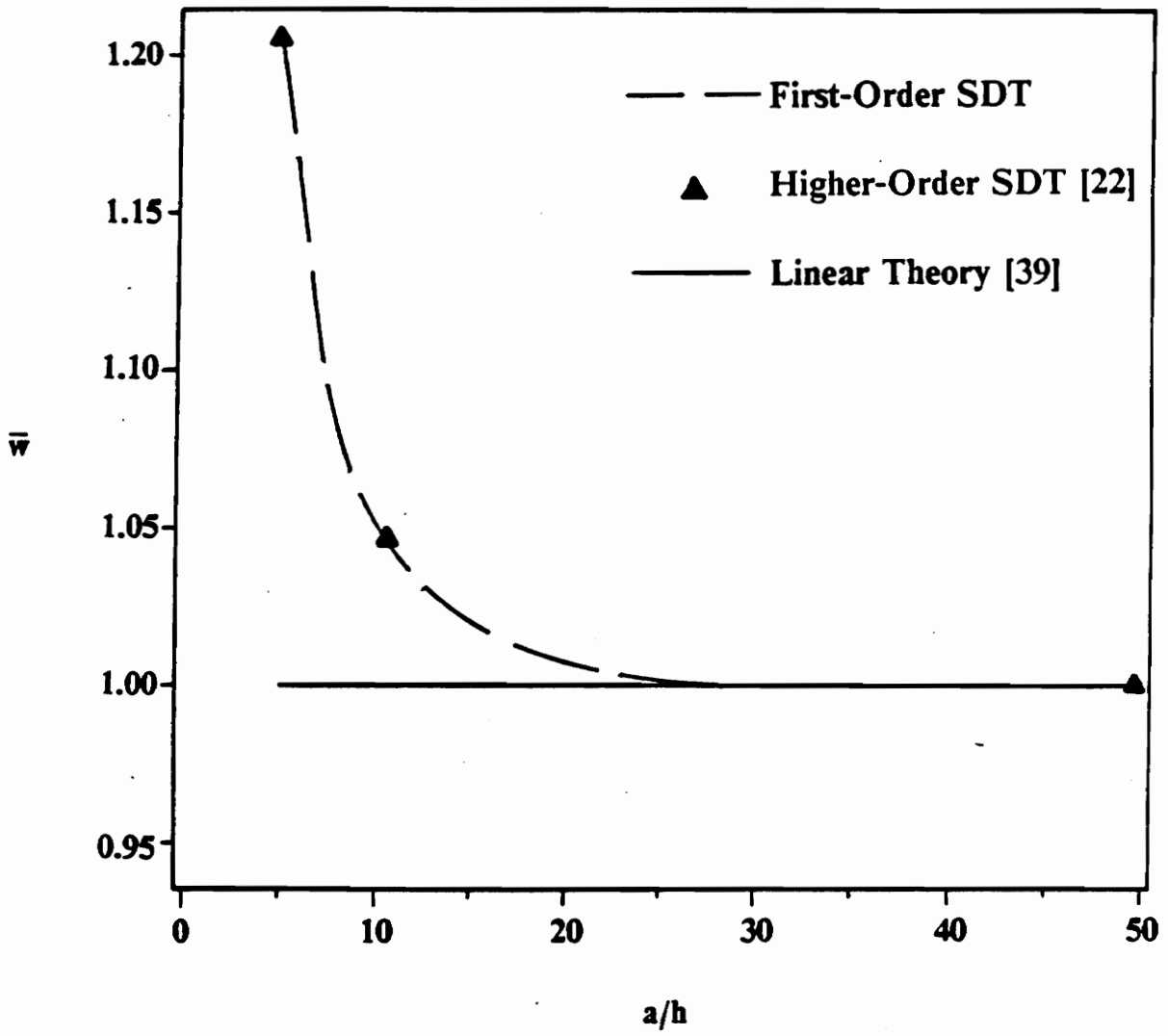

Fig. 10. Normalized Center Deflection of a Simply-Supported Isotropic Plate Under a Uniformly-Distributed Transverse Load.

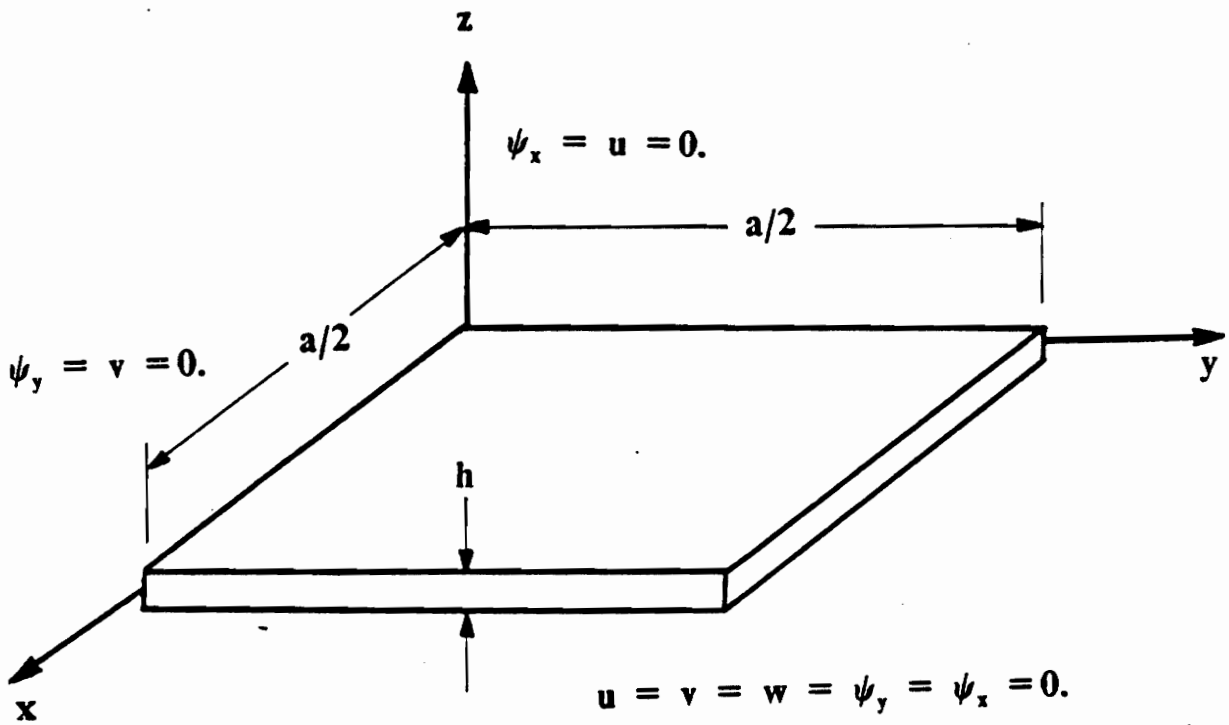

Fig. 11. Geometry and Boundary Conditions of the First Quadrant of a Clamped Symmetric Cross-Ply [0/90/90/0] Laminated Composite Plate.

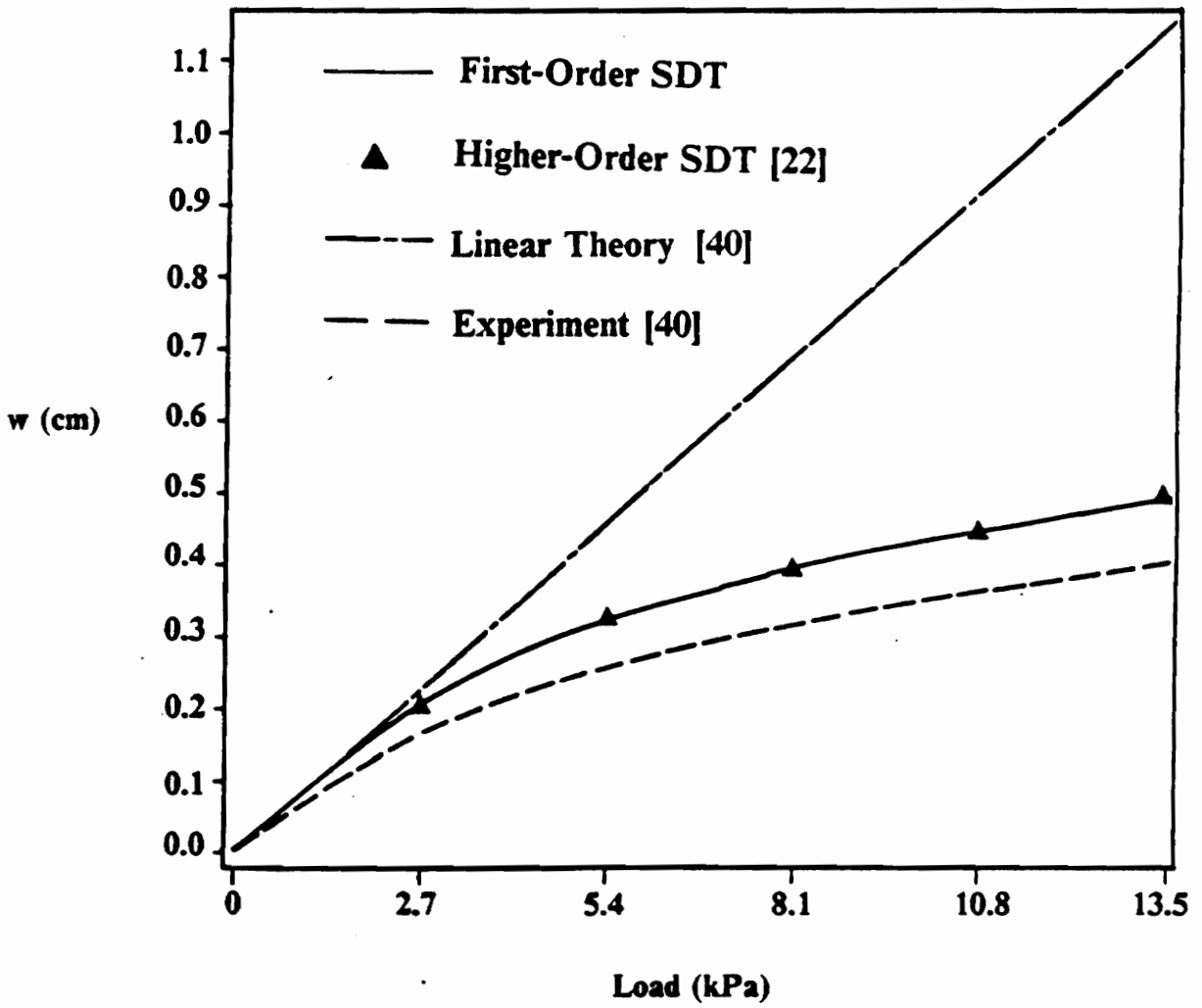

Fig. 12. Center Deflection of a Clamped Symmetric Cross-Ply [0/90/90/0] Laminate Subjected to a Uniform Transverse Load (a = 4.72 cm (12. in.), h = 0.038cm (0.096 in.)).

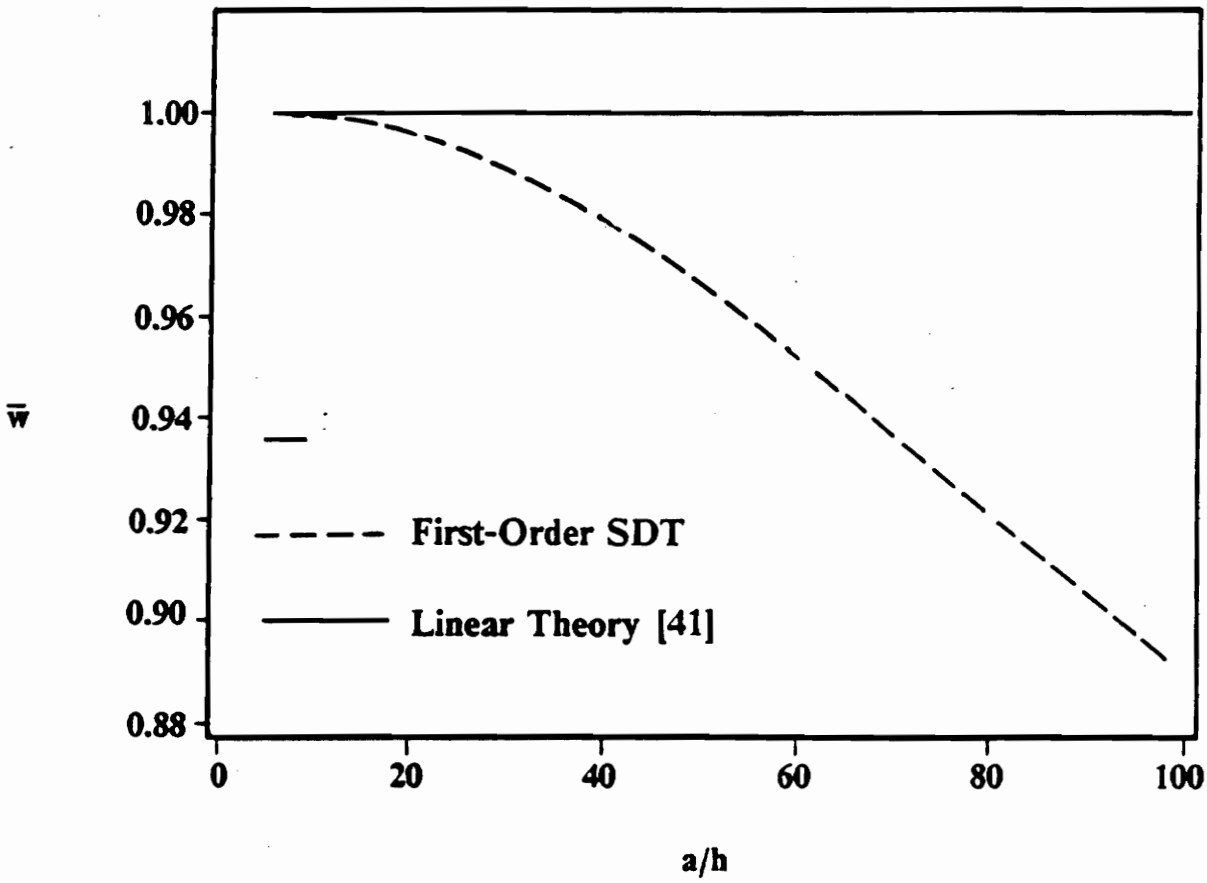

Fig. 13. Normalized Deflection of a Simply-Supported Isotropic Plate Subjected to a Linear Temperature Distribution.

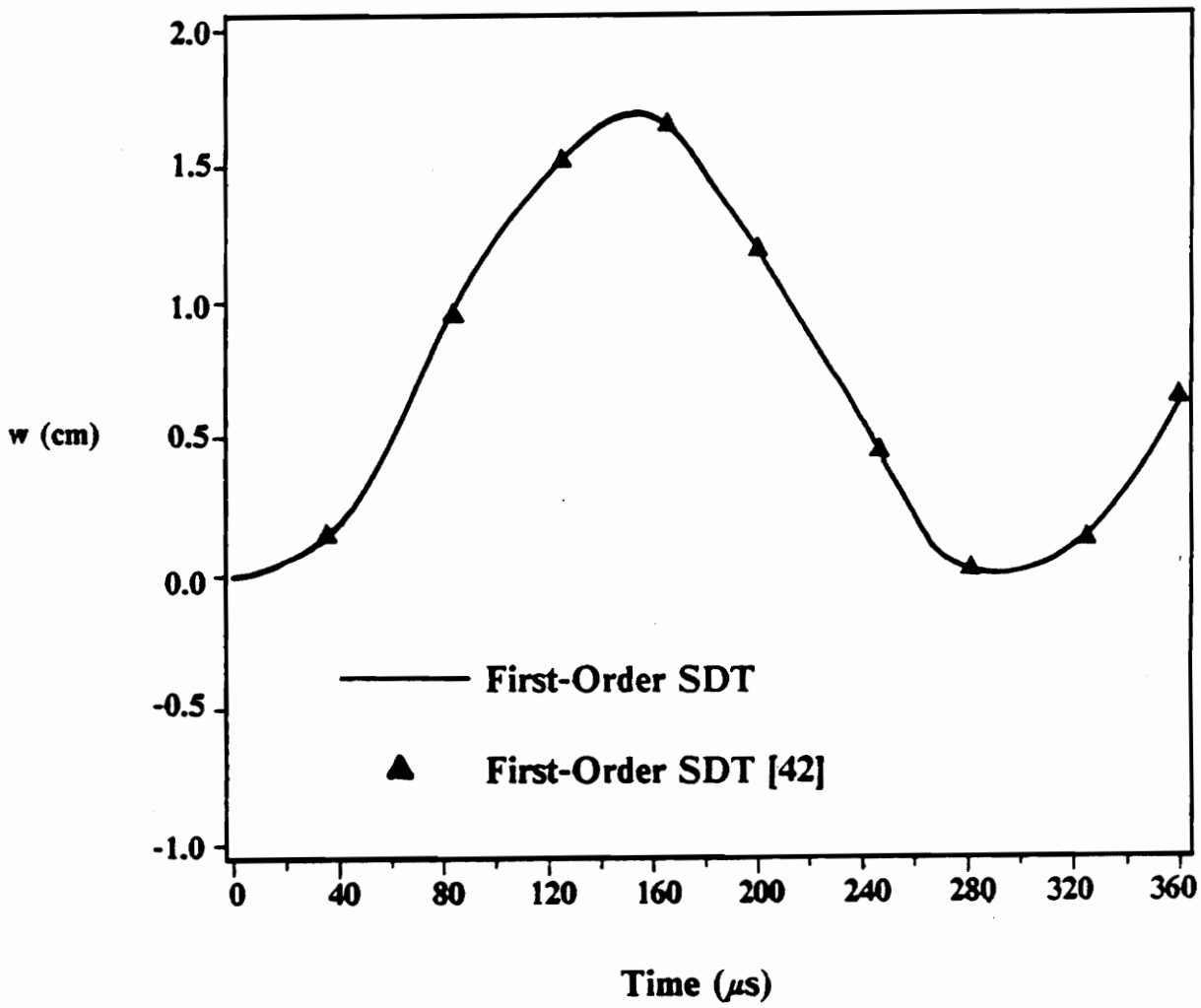

Fig. 14. Evolution of Center Deflection with Time for a Simply-Supported Isotropic Square Plate Under a Uniform Load of 100 kPa (a = 25.0 cm, h = 5.0 cm).

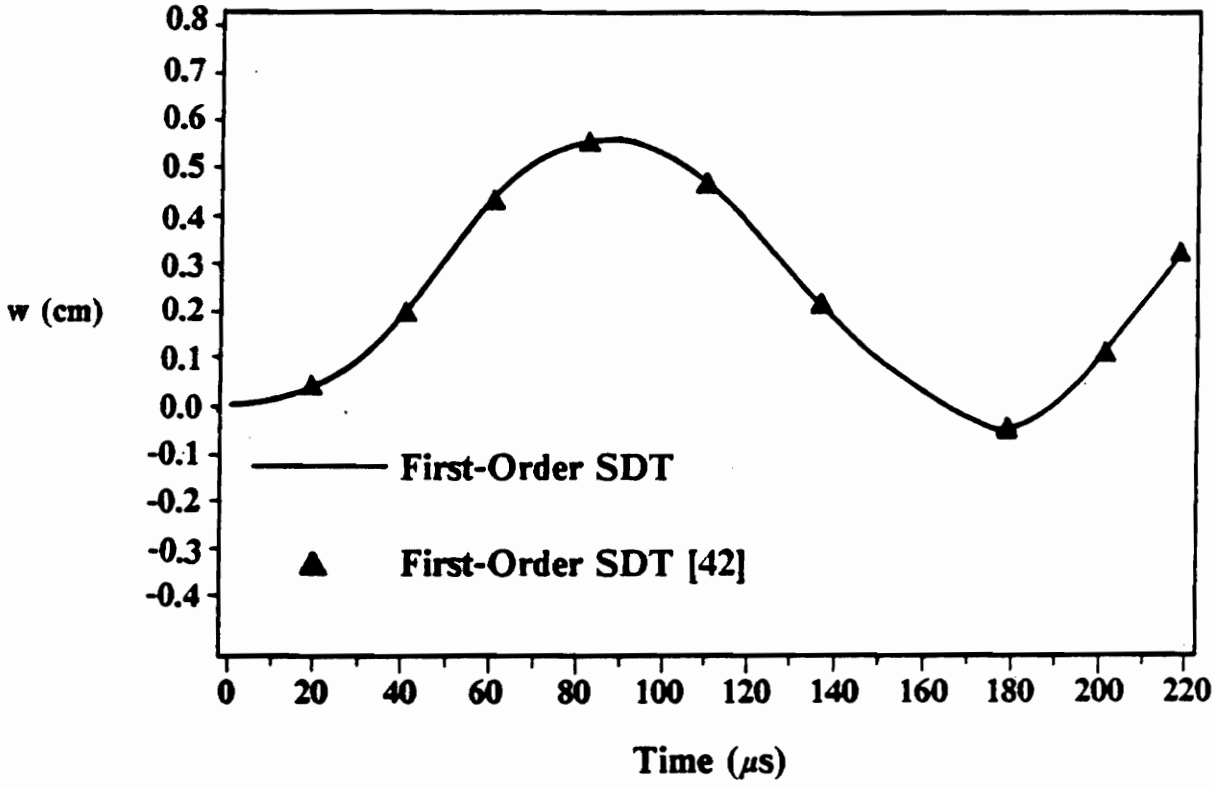

Fig. 15. Evolution of Center Deflection with Time for a [0/90/0] Simply-Supported Laminated Composite Plate Under a Uniform Load of 100 kPa (a = 25.0 cm, h = 5.0 cm).

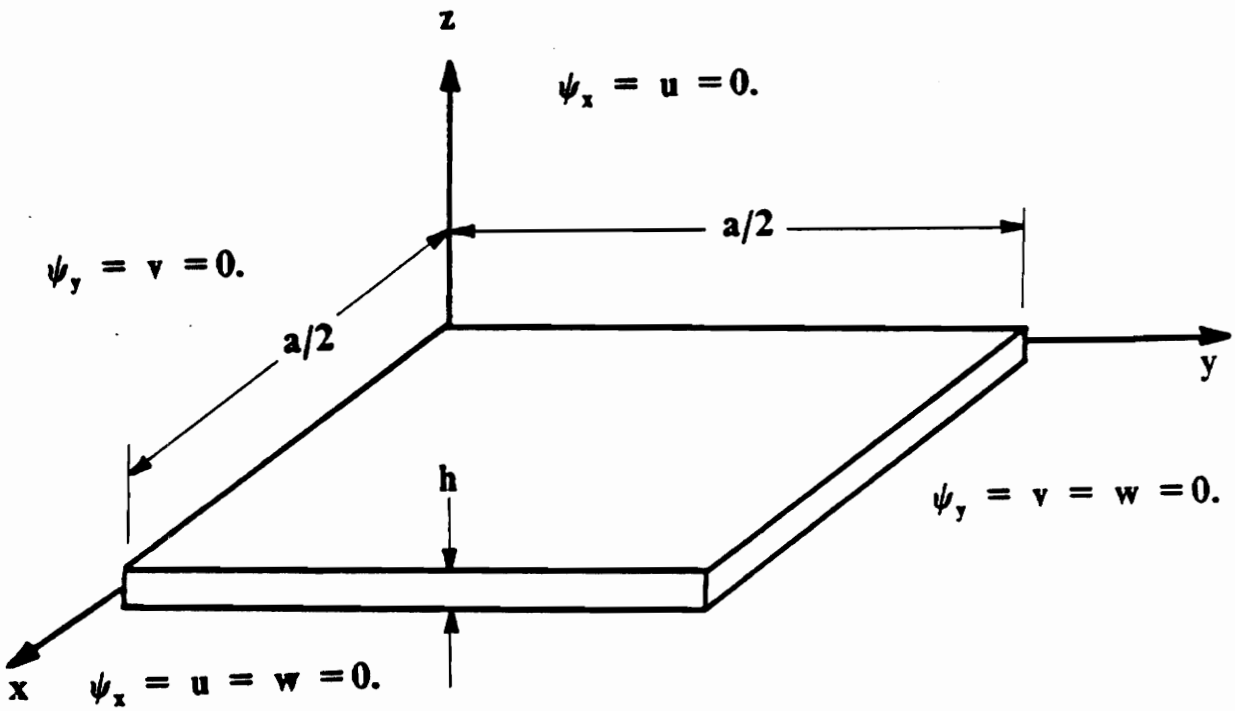

Fig. 16. Geometry and Boundary Conditions of the First Quadrant of a Simply-Supported Cross-Ply [0/90/90/0] Laminated Composite Plate (a = 2.0 cm, h = 0.5 cm).

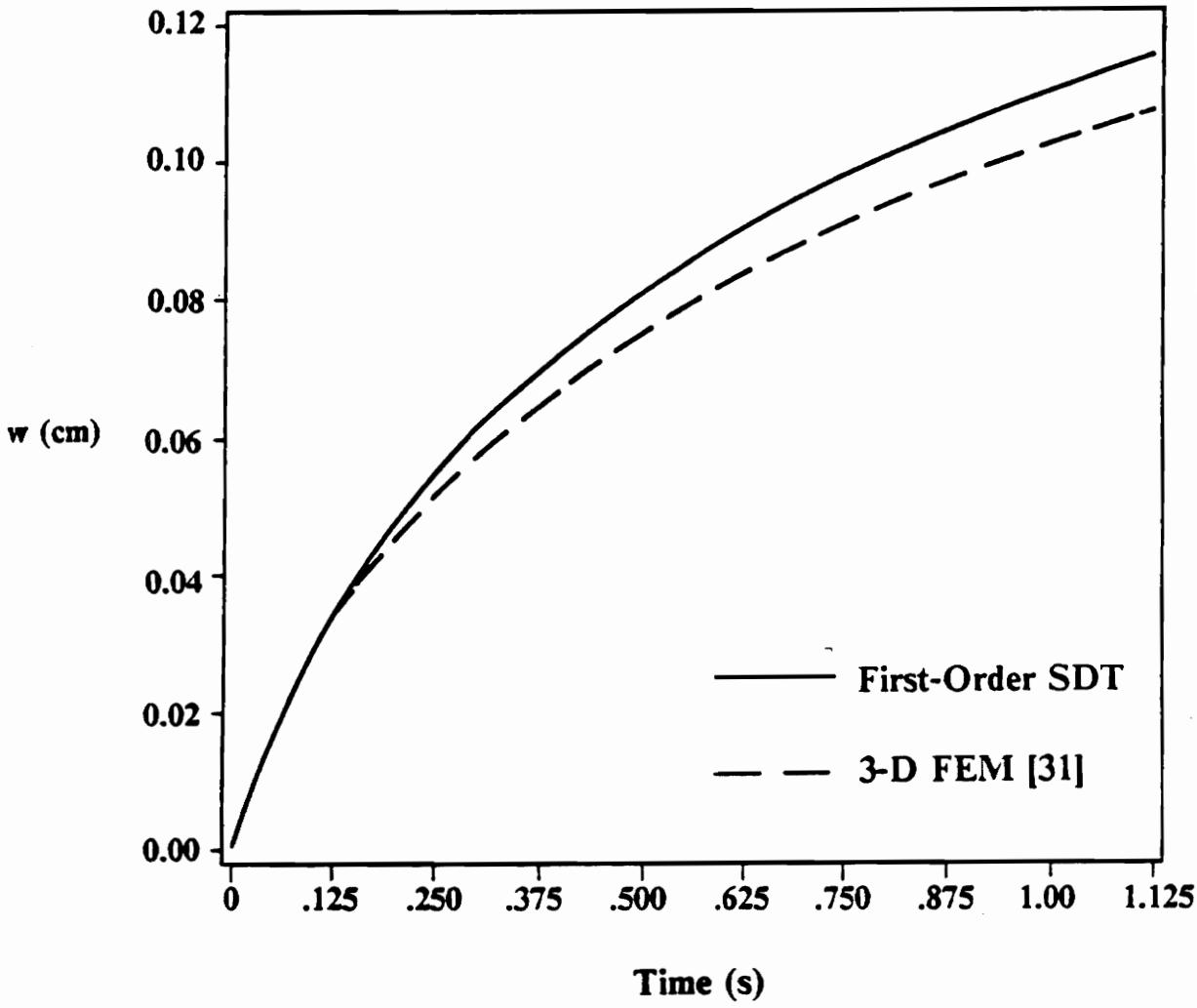

Fig. 17. Evolution of Center Deflection with Time for a Simply-Supported [0/90/90/0] Laminated Composite Plate Subjected to a Nonuniform Heat Flux (a = 2.0 cm, h = 0.5 cm).

References

1. Owen, K., *Beyond Harrier*, **Aerospace America**, January, 1987, p.14.

2. Jones, R. M., **Mechanics of Composite Material**, Hemisphere Publishing Co., New York, 1975.

3. Reissner, E. and Y. Stavsky, *Bending and Stretching of Certain Types of Heterogenous Aeolotropic Elastic Plates* , **Journal of Applied Mechanics**, Vol. 28, 1961, pg. 402.

4. Pagano, N.J., *Exact Solutions for Composite Laminates in Cylindrical Bending*, **Journal of Composite Materials**, Vol. 3, July 1969, pp. 398-411.

5. Pagano, N.J., *Exact Solutions for Rectangular Bidirectional Composites and Sandwich Plates*, **Journal of Composite Materials**, Vol. 4, Jan. 1970, pp. 20-34.

6. Pagano, N.J., *Influence of Shear Coupling in Cylindrical Bending of Anisotropic Laminates*, **Journal of Composite Materials**, Vol. 4, July 1970, pp. 330-343.

7. Mindlin, R. D., *Influence of Rotary Inertia and Shear on Flexural Motions of Isotropic, Elastic Plates*, **Journal of Applied Mechanics**, Vol. 18, March 1951, pp. 31-38.

8. Stravsky, Y., *Bending and Stretching of Laminated Aeolotropic Plates*, Proc. ASCE87, **Journal of Engineering and Mechanics. Division** , EM6, 31, 1961

9. Yang, P. C., C. H. Norris, and Y. Stravsky, *Bending and Stretching of Laminated Aeolotropic Plates*, **International of Solids and Structures**, Vol. 2 1966 pp. 665-684

10. Whitney J. M., N. J. Pagano, *Shear Deformation in Heterogenous Anisotropic Plates*, **Journal of Applied Mechanics**, Vol. 37, May 1970, pp. 1031-1036.

11. Reissner, E., *A Consistent Treatment of Transverse Shear Deformations in Laminated Anisotropic Plates*, **AIAA Journal**, Vol. 10, 1972, pp. 716-718.

12. Lo, K. H., R. M. Christensen, and E. M. Wu, *A Higher-Order Theory of Plate Deformation. Parts 1 & 2*, **Journal of Applied Mechanics**, Vol. 44, 1977, pp. 663-676.

13. Librescu, L., **Elastostatics and Kinetics of Anisotropic and Heterogenous Shell-Type Structures**, Noordhorf, The Netherlands, 1975.

14. Dong, S. B., K. S. Pister, and R. L. Taylor, *On the Theory of Laminated Anisotropic Shells and Plates*, **Journal of Aerospace Science.**, Vol. 28, 1962, pp. 969-986.

15. Bert, C. W., and B. L. Mayberry, *Free Vibrations of Unsymmetrically Laminated Anisotropic Plates with Clamped Edges*, **Journal of Composite Materials**, Vol. 3, 1969, pp. 282-293.

16. Reddy, J. N., and Y. S. Hsu, *Effects of Shear Deformation and Anisotropy on the Thermal Bending of Layered Composite Plates*, **Journal of Thermal Stresses**, Vol. 3, 1980, pp. 475-493.

17. Mei, C., and C. B. Prasad, *Influence of Large Deflection and Transverse Shear on Random Response of Rectangular Symmetric Composite Laminates to Acoustic Loads*, NASA Contractor Report 178313, 1987.

18. Pryor C. W., and R. M. Barker, *A Finite-Element Analysis Including Transverse Shear Effects for Applications to Laminated Plates*, **AIAA Journal**, Vol. 9, No. 5, May 1971, pp. 912-917.

19. Barker R. M., F. T. Lin, and J. R. Dara, *Three-Dimensional Finite Element Analysis of Laminated Composites* , National Symposium., Computerized Structural Analysis and Design, George Washington University, 1972

20. Noor A. K., and M. D. Mathers, *Anisotropy and Shear Deformation in Laminanted Composite Plates* , **AIAA Journal**, Vol. 14, No. 2, Feb. 1976, pp. 282-285.,

21. Reddy, J.N., *A Refined Nonlinear Theory of Plates with Transverse Shear Deformation*, **Journal of Solids and Structures**, Vol. 20, No. 9, 1984, pp. 881-896.

22. Reddy, J.N., *A Refined Shear Deformation Theory for the Analysis of Laminated Plates*, NASA Contractor Report 3955, 1986.

23. Reddy, J.N., *A Penalty Plate-Bending Element for the Analysis of Laminated Anisotropic Composite Plates*, **International Journal for Numerical Methods in Engineering**, Vol. 15, 1980, pp. 1187-1206.

24. Zienkiewicz, O.C., R. L. Taylor, and J. M. Too, *Reduced Integration Technique in General Analysis of Plates and Shells*, **International Journal for Numerical Methods in Engineering**, Vol. 3, 1971, pp. 275-290.

25. Pell, W.H., *Thermal Deflections of Anisotropic Thin Plates Shells*, **International Journal for Numerical Methods in Engineering** , Vol. 3, 1971, pp. 275-290.

26. Sharma B., *Thermal Stresses in Transversely Isotropic Semi-Infinite Elastic Solids* **Journal of Applied Mechanics**, Vol. 25, 1958, pp. 86-88.

27. Nowacki, W., **Thermoelasticity**, Addison-Wesley, Reading, Mass., 1962, pp. 585-589.

28. Sugano, Y., *Transient Thermal Stresses in a Transversely Isotropic Finite Circular Cylinder due to an Arbitrary Internal Heat-Generation*, **International Journal Engineering Science**, Vol. 17, 1979, pp.729-939.

29. Tauchert, T. R., and A. Y. Akoz, *Thermal Stresses in an Orthotropic Elastic Slab due to Prescribed Surface Temperatures*, **Journal of Applied Mechanics**, Vol. 41, 1974, pp. 222-228.

30. Wang, H., and T. W. Chou, *Transient Thermal Behavior of a Thermally and Elastically Orthotropic Medium*, **AIAA Journal**, Vol. 24, 1986, pp. 664-672.

31. Jia, J., **Coupled Three-Dimensional Transient Thermoelasticity Analysis of Fiber-Reinforced Laminate Composite Materials**, Master of Science Thesis, Virginia Polytechnic Institute and State University, November 1987.

32. Reissner, E., *On the Theory of Bending of Elastic Plates*, **Journal of Mathematics and Physics** , Vol. 23, 1944, pp. 184-191.

33. Basset, A. B., *On the Extension and Flexure of Cylindrical and Spherical Thin Elastic Shells*, **Royal Society of London Philosophical Transactions**, (London), Ser. B, Vol. 181, No. 6, 1980, pp. 433-480.

34. Gol'denveizer, A. L., *On Reissner's Theory of the Bending of Plates*, Izvestiya AN SSSR, OTN, No. 4, 1958, pp. 102-109.

35. Schmidt, R., *A Refined Nonlinear Theory of Plates with Transverse Shear Deformation*, **Journal of Industrial Mathematics Society**, Vol. 27, Part 1, 1977, pp. 23-28.

36. Fredrick D. H., and S. Chang, **Continuum Mechanics**, Scientific Publishers, Cambridge, 1972, pp. 7,82.

37. Reddy, J. N., **Variational Methods**, Wiley, New York, 1984, pp.64-192, pp. 299-308.

38. Reddy, J. N., **An Introduction to Finite Element Method** , McGraw-Hill, New York, 1984, pp.64-192, pp.299-308.

39. Ugural A. C., and S. K. Fenster, **Advanced Strength Applied Elasticity**, Elsevier, New York, 1984, pp. 385-388.

40. Zaghloul, S. A., and J. B. Kennedy, *Nonlinear Behavior of Symmetrically Laminated Plates*, **Journal of Applied Mechanics**, Vol. 42, 1975, pp. 234-236.

41. Timoshenko S., and S. Woinowsky, **Theory of Plates and Shells**, 2nd Ed. McGraw-Hill, New York, 1959, pp. 176-180.

42. Reddy, J. N., *Dynamic Transient Analysis of Layered Anisotropic Composite Material Plates*, **Internationl Journal for Numerical Methods in Engineering**, Vol. 19, 1983, pp. 237-255.

Appendix A. COMMEC2 PROGRAM LISTING

```
      IMPLICIT REAL*8(A-H,O-Z)                                          COM00010
      DIMENSION IBDY(85),VBDY(85),X(25),Y(25),TITLE(70)                 COM00020
      DIMENSION IBF(1),VBF(1),GSTIF(125,65),ELXY(9,2),U(125),GR(125)    COM00030
      DIMENSION TNX(25),TNY(25),TNXY(25),TMX(25),TMY(25),TMXY(25)       COM00040
      DIMENSION TEM(5,25),T(5),TH(5),DX(5),DY(5),LMT(5)                 COM00050
      DIMENSION E1(2),E2(2),E3(2),P12(2),P31(2),P23(2)                  COM00060
      DIMENSION G12(2),G31(2),G23(2),ALP1(2),ALP2(2),ALP12(2),RHO(2)    COM00070
      DIMENSION C(2,6),Z(21),ZB(20),CSH(20,3),QB(20,6)                  COM00080
      DIMENSION ALPX(20),ALPY(20),ALPXY(20)                             COM00090
      DIMENSION GF0(125),GF1(125),GF2(125)                              COM00100
      COMMON/MSH/NOD(4,9)                                               COM00110
      COMMON/STF1/ELKT(45,45),R(45),A(6),B(6),D(6),AS(3)                COM00120
      COMMON/STF2/SA0,SA1,SA2,SA3,SA4,XIN1,XIN2                         COM00130
      COMMON/STF3/ELUU(45),ELU(45),ELU1(45),ELU2(45)                    COM00140
      COMMON/STF4/TTNX(9),TTNY(9),TTNXY(9),TTMX(9),TTMY(9),TTMXY(9)     COM00150
      DATA NRMAX,NCMAX/125,65/                                          COM00160
      READ(5,3)TITLE                                                    COM00170
      READ(5,*)NPE,NDF,IMESH                                            COM00180
      IF(NPE.EQ.4)THEN                                                  COM00190
       IELEM=2                                                          COM00200
      ELSE                                                              COM00210
       IELEM=3                                                          COM00220
      ENDIF                                                             COM00230
      NN=NPE*NDF                                                        COM00240
      IF(IMESH.EQ.1)GOTO 500                                            COM00250
      READ(5,*)NEM,NNM                                                  COM00260
      DO 510 N=1,NEM                                                    COM00270
 510  READ(5,*)(NOD(N,I),I=1,NPE)                                       COM00280
      READ(5,*)(X(I),Y(I),I=1,NNM)                                      COM00290
      GOTO 520                                                          COM00300
 500  READ(5,*)NX,NY                                                    COM00310
      READ(5,*)(DX(I),I=1,NX)                                           COM00320
      READ(5,*)(DY(I),I=1,NY)                                           COM00330
      CALL MESH(IELEM,NX,NY,NPE,X,Y,NNM,NEM,DX,DY)                      COM00340
 520  CONTINUE                                                          COM00350
      READ(5,*)ITMAX,TOLER,SEED                                         COM00360
      READ(5,*)MT,NL,SK,TEO                                             COM00370
      DO 5 I=1,MT                                                       COM00380
       READ(5,*)E1(I),E2(I),E3(I),P12(I),P31(I),P23(I)                  COM00390
 5    READ(5,*)G12(I),G31(I),G23(I),ALP1(I),ALP2(I),ALP12(I),RHO(I)     COM00400
      TT=0.                                                             COM00410
      DO 7 I=1,NL                                                       COM00420
       READ(5,*)TH(I),T(I),LMT(I)                                       COM00430
 7    TT=TT+T(I)                                                        COM00440
      READ(5,*)NLOAD,PINIT,PDELT                                        COM00450
C                                                                       COM00460
C*-*-*-*-*-*-*-*-*-*-*-*-*-*-*-*-*-*-*-*-*-*-*-*-*-*-*-*-*-*-*-*-*-*-*COM00470
C                                                                       COM00480
C     TRANSIENT INPUT                                                   COM00490
C                                                                       COM00500
      READ(5,*)ITIM                                                     COM00510
      IF(ITIM.EQ.1)THEN                                                 COM00520
       READ(5,*)NT,TMAX                                                 COM00530
       DELT=TMAX/NT                                                     COM00540
```

```
      SA0=4.D0/(DELT**2)                                                COM00550
      SA1=SA0*DELT                                                      COM00560
      SA2=1.D0                                                          COM00570
      SA3=DELT/2.D0                                                     COM00580
      SA4=SA3                                                           COM00590
     ELSE                                                               COM00600
      SA0=0.D0                                                          COM00610
      SA1=0.D0                                                          COM00620
      SA2=0.D0                                                          COM00630
      SA3=0.D0                                                          COM00640
      SA4=0.D0                                                          COM00650
     ENDIF                                                              COM00660
C                                                                       COM00670
C*-*-*-*-*-*-*-*-*-*-*-*-*-*-*-*-*-*-*-*-*-*-*-*-*-*-*-*-*-*-*-*-*-*-*COM00680
C                                                                       COM00690
C     WRITE INPUT DATA TO OUTPUT FILE                                   COM00700
C                                                                       COM00710
      WRITE(7,3)TITLE                                                   COM00720
      WRITE(7,6399)                                                     COM00730
      WRITE(7,938)NPE                                                   COM00740
      WRITE(7,940)NEM                                                   COM00750
      WRITE(7,942)NNM                                                   COM00760
      WRITE(7,6399)                                                     COM00770
      WRITE(7,8999)                                                     COM00780
      DO 8998 I=1,NEM                                                   COM00790
 8998 WRITE(7,2376)I,(NOD(I,J),J=1,NPE)                                 COM00800
      WRITE(7,6399)                                                     COM00810
      WRITE(7,2999)                                                     COM00820
      DO 3998 I=1,NNM                                                   COM00830
 3998 WRITE(7,2876)I,X(I),Y(I)                                          COM00840
      WRITE(7,6399)                                                     COM00850
      WRITE(7,8210)MT                                                   COM00860
      WRITE(7,8211)NL                                                   COM00870
      WRITE(7,8212)TEO                                                  COM00880
      WRITE(7,8213)SK                                                   COM00890
      WRITE(7,8214)TOLER                                                COM00900
      WRITE(7,8215)SEED                                                 COM00910
      WRITE(7,8216)PINIT                                                COM00920
      WRITE(7,3416)PDELT                                                COM00930
      WRITE(7,6399)                                                     COM00940
      DO 5164 I=1,MT                                                    COM00950
       WRITE(7,9922)MT                                                  COM00960
       WRITE(7,3522)                                                    COM00970
       WRITE(7,3523)E1(I),E2(I),E3(I),P12(I),P31(I),P23(I)              COM00980
       WRITE(7,6382)                                                    COM00990
       WRITE(7,6384)G12(I),G31(I),G23(I),ALP1(I),ALP2(I),ALP12(I)       COM01000
 5164 WRITE(7,3473)RHO(I)                                               COM01010
      WRITE(7,6399)                                                     COM01020
      WRITE(7,7444)                                                     COM01030
      DO 7445 I=1,NL                                                    COM01040
 7445 WRITE(7,7446)TH(I),T(I),LMT(I)                                    COM01050
      WRITE(7,6399)                                                     COM01060
 7444 FORMAT(' ','ANGLE',4X,'THICKNESS',4X,'MAT. TYPE')                 COM01070
 7446 FORMAT(' ',F5.2,5X,F7.4,9X,I2)                                    COM01080
 8210 FORMAT(' ','NO. OF MATERIAL TYPES =',I1)                          COM01090
 8211 FORMAT(' ','NO. OF LAYERS IN PLATE =',I2)                         COM01100
 8212 FORMAT(' ','STRESS-FREE TEMPERATURE =',F8.4)                      COM01110
 8213 FORMAT(' ','SHEAR CORRECTION FACTOR =',F8.6)                      COM01120
 8214 FORMAT(' ','TOLERANCE ON LS ERROR =',F8.4)                        COM01130
 8215 FORMAT(' ','INITIAL DISPLACEMENTS =',F8.6)                        COM01140
 8216 FORMAT(' ','INITIAL LOAD IN THE Z-DIRECTION=',F13.6)              COM01150
 3416 FORMAT(' ','DELTA LOAD IN THE Z-DIRECTION=',F13.6)                COM01160
 3    FORMAT(' ',70A1)                                                  COM01170
 938  FORMAT(' ','NO. OF NODES PER ELEMENT= ',I1)                       COM01180
 940  FORMAT(' ','NO. OF ELEMENTS IN MESH= ',I2)                        COM01190
 942  FORMAT(' ','NO. OF NODES IN MESH= ',I2)                           COM01200
 2876 FORMAT(' ',I2,3X,2(F7.4,2X))                                      COM01210
 2376 FORMAT(' ',3X,I2,7X,9(I2,2X))                                     COM01220
 8999 FORMAT(' ','ELEMENT',3X,'NODES')                                  COM01230
 2999 FORMAT(' ','NODE',5X,'X',8X,'Y')                                  COM01240
 6399 FORMAT(' ',' ',/)                                                 COM01250
```

```
 9922 FORMAT(' ','FOR MATERIAL TYPE ',I1,':')                          COM01260
 3522 FORMAT(' ',4X,'E1',10X,'E2',10X,'E3',8X,'P12',7X,'P31',7X,'P23')  COM01270
 3523 FORMAT(' ',3(D10.4,2X),3(F8.6,2X))                               COM01280
 6382 FORMAT(' ',3X,'G12',9X,'G31',9X,'G23',9X,'TE1',9X,'TE2',8X,'TE12')COM01290
 6384 FORMAT(' ',6(D10.4,2X))                                          COM01300
 3473 FORMAT(' ','RHO=',D13.6)                                         COM01310
C                                                                      COM01320
C     INPUT NONZERO BOUNDARY FORCES AND DISPLACEMENTS                  COM01330
C                                                                      COM01340
C                                                                      COM01350
      READ(5,*)NBDY,NBF                                                COM01360
      IF(NBDY.EQ.0)THEN                                                COM01370
       IBDY(1)=0                                                       COM01380
       VBDY(1)=0.D0                                                    COM01390
      ELSE                                                             COM01400
       READ(5,*)(IBDY(I),I=1,NBDY)                                     COM01410
       READ(5,*)(VBDY(I),I=1,NBDY)                                     COM01420
      ENDIF                                                            COM01430
      IF(NBF.EQ.0)THEN                                                 COM01440
       IBF(1)=0                                                        COM01450
       VBF(1)=0.D0                                                     COM01460
      ELSE                                                             COM01470
       DO 30 I=1,NBF                                                   COM01480
 30    READ(5,*)IBF(I)                                                 COM01490
       DO 33 I=1,NBF                                                   COM01500
 33    READ(5,*)VBF(I)                                                 COM01510
       WRITE(7,35)(VBF(I),I=1,NBF)                                     COM01520
 35    FORMAT(' ','SECONDARY KNOWNS=',4(F10.4,2X),//)                  COM01530
      ENDIF                                                            COM01540
C*-*-*-*-*-*-*-*-*-*-*-*-*-*-*-*-*-*-*-*-*-*-*-*-*-*-*-*-*-*-*-*-*-*-*COM01550
C                                                                      COM01560
C     CALCULATION OF MATERIAL PROPERTIES                               COM01570
C                                                                      COM01580
C - - - - - - - - - - - - - - - - - - - - - - - - - - - - - - - - - - - - COM01590
C                                                                      COM01600
C     CALCULATION OF STIFFNESS MATRIX                                  COM01610
C                                                                      COM01620
      DO 27 I=1,MT                                                     COM01630
       P32=E3(I)*P23(I)/E2(I)                                          COM01640
       P21=E2(I)*P12(I)/E1(I)                                          COM01650
       P13=E1(I)*P31(I)/E3(I)                                          COM01660
       CDEL=(1.D0-P12(I)*P21-P23(I)*P32-P31(I)*P13-2.D0*P21*P32*P13)/  COM01670
     &      (E1(I)*E2(I)*E3(I))                                        COM01680
       C(I,1)=(1.D0-P23(I)*P32)/(CDEL*E2(I)*E3(I))                     COM01690
       C(I,2)=(P12(I)+P32*P13)/(CDEL*E1(I)*E3(I))                      COM01700
       C(I,3)=(P31(I)+P21*P32)/(CDEL*E2(I)*E3(I))                      COM01710
       C(I,4)=(1.D0-P13*P31(I))/(CDEL*E1(I)*E3(I))                     COM01720
       C(I,5)=(P23(I)+P21*P13)/(CDEL*E1(I)*E2(I))                      COM01730
  27   C(I,6)=(1.D0-P12(I)*P21)/(CDEL*E1(I)*E2(I))                     COM01740
C . . . . . . . . . . . . . . . . . . . . . . . . . . . . . . . . . . . COM01750
C                                                                      COM01760
C      TRANSFORMED REDUCED STIFFNESS MATRIX (QB)                       COM01770
C                                                                      COM01780
C . . . . . . . . . . . . . . . . . . . . . . . . . . . . . . . . . . . COM01790
      Z(1)=TT/2.D0                                                     COM01800
      DO 15 I=1,NL                                                     COM01810
       II=I+1                                                          COM01820
       Z(II)=Z(I)-T(I)                                                 COM01830
       ZB(I)=(Z(I)+Z(II))/2.D0                                         COM01840
       TTH=TH(I)*3.141592653589793D0/180.D0                            COM01850
       CS=COS(TTH)                                                     COM01860
       SN=SIN(TTH)                                                     COM01870
       CS4=CS**4                                                       COM01880
       CS2=CS*CS                                                       COM01890
       SN4=SN**4                                                       COM01900
       SN2=SN*SN                                                       COM01910
       K=LMT(I)                                                        COM01920
       CC1=C(K,2)+2.D0*G12(K)                                          COM01930
       CC2=C(K,1)+C(K,4)-4.D0*G12(K)                                   COM01940
       CC3=C(K,1)-C(K,2)-2.D0*G12(K)                                   COM01950
       CC4=C(K,1)-2.D0*C(K,2)+C(K,4)                                   COM01960
```

```
      CC5=C(K,2)-C(K,4)+2.D0*G12(K)                                     COM01970
      CB11=CS4*C(K,1)+2.D0*CS2*SN2*CC1+SN4*C(K,4)                       COM01980
      CB12=CS2*SN2*CC2+(SN4+CS4)*C(K,2)                                 COM01990
      CB13=CS2*C(K,3)+SN2*C(K,5)                                        COM02000
      CB16=SN*CS*(CS2*CC3+SN2*CC5)                                      COM02010
      CB22=SN4*C(K,1)+2.D0*CS2*SN2*CC1+CS4*C(K,4)                       COM02020
      CB23=SN2*C(K,3)+CS2*C(K,5)                                        COM02030
      CB26=SN*CS*(SN2*CC3+CS2*CC5)                                      COM02040
      CB33=C(K,6)                                                       COM02050
      CB36=CS*SN*(C(K,3)-C(K,5))                                        COM02060
      CB66=CS2*SN2*CC4+G12(K)*((CS2-SN2)**2)                            COM02070
      CSH(I,1)=CS2*G23(K)+SN2*G31(K)                                    COM02080
      CSH(I,2)=CS*SN*(G31(K)-G23(K))                                    COM02090
      CSH(I,3)=SN2*G23(K)+CS2*G31(K)                                    COM02100
      ALPX(I)=ALP1(K)*CS2+ALP2(K)*SN2                                   COM02110
      ALPY(I)=ALP1(K)*SN2+ALP2(K)*CS2                                   COM02120
      ALPXY(I)=2.D0*(ALP1(K)-ALP2(K))*CS*SN                             COM02130
      QB(I,1)=CB11-(CB13**2)/CB33                                       COM02140
      QB(I,2)=CB12-(CB13*CB23)/CB33                                     COM02150
      QB(I,3)=CB16-(CB13*CB36)/CB33                                     COM02160
      QB(I,4)=CB22-(CB23**2)/CB33                                       COM02170
      QB(I,5)=CB26-(CB23*CB26)/CB33                                     COM02180
 15   QB(I,6)=CB66-(CB36**2)/CB33                                       COM02190
C. . . . . . . . . . . . . . . . . . . . . . . . . . . . . . . . . . . .COM02200
C                                                                       COM02210
C       ASSEMBLE THE A, B, D, MATRICES                                  COM02220
C                                                                       COM02230
C . . . . . . . . . . . . . . . . . . . . . . . . . . . . . . . . . . . COM02240
      DO 17 J=1,6                                                       COM02250
       A(J)=0.                                                          COM02260
       B(J)=0.                                                          COM02270
       D(J)=0.                                                          COM02280
       DO 18 I=1,NL                                                     COM02290
        II=I+1                                                          COM02300
        A(J)=QB(I,J)*(Z(I)-Z(II))+A(J)                                  COM02310
        B(J)=QB(I,J)*(Z(I)**2-Z(II)**2)/2.D0+B(J)                       COM02320
 18    D(J)=QB(I,J)*(Z(I)**3-Z(II)**3)/3.D0+D(J)                        COM02330
 17   CONTINUE                                                          COM02340
C . . . . . . . . . . . . . . . . . . . . . . . . . . . . . . . . . . . COM02350
C                                                                       COM02360
C     SHEAR STIFFNESS TERMS                                             COM02370
C                                                                       COM02380
C . . . . . . . . . . . . . . . . . . . . . . . . . . . . . . . . . . . COM02390
      DO 19 J=1,3                                                       COM02400
       AS(J)=0.D0                                                       COM02410
       DO 21 I=1,NL                                                     COM02420
        II=I+1                                                          COM02430
 21    AS(J)=CSH(I,J)*(Z(I)-Z(II))+AS(J)                                COM02440
       AS(J)=AS(J)*SK                                                   COM02450
 19   CONTINUE                                                          COM02460
C. . . . . . . . . . . . . . . . . . . . . . . . . . . . . . . . . . . .COM02470
C                                                                       COM02480
C     AVERAGE DENSITY                                                   COM02490
C                                                                       COM02500
C. . . . . . . . . . . . . . . . . . . . . . . . . . . . . . . . . . . .COM02510
      RH=0.D0                                                           COM02520
      DO 23 I=1,NL                                                      COM02530
 23   RH=RHO(LMT(I))*T(I)+RH                                            COM02540
      RH=RH/TT                                                          COM02550
      IF(ITIM.EQ.1)THEN                                                 COM02560
       XIN1=RH*TT                                                       COM02570
       XIN2=RH*(TT**3)/12.D0                                            COM02580
      ELSE                                                              COM02590
       XIN1=0.                                                          COM02600
       XIN2=0.                                                          COM02610
      ENDIF                                                             COM02620
C                                                                       COM02630
C     WRITE LAMINATE PROPERTIES                                         COM02640
C                                                                       COM02650
      WRITE(7,4572)(A(I),I=1,3)                                         COM02660
      WRITE(7,4573)(A(I),I=4,5)                                         COM02670
```

```
      WRITE(7,4574)A(6)                                                 COM02680
      WRITE(7,6399)                                                     COM02690
      WRITE(7,4572)(B(I),I=1,3)                                         COM02700
      WRITE(7,5573)(B(I),I=4,5)                                         COM02710
      WRITE(7,4574)B(6)                                                 COM02720
      WRITE(7,6399)                                                     COM02730
      WRITE(7,4572)(D(I),I=1,3)                                         COM02740
      WRITE(7,7573)(D(I),I=4,5)                                         COM02750
      WRITE(7,4574)D(6)                                                 COM02760
      WRITE(7,6399)                                                     COM02770
      WRITE(7,7571)(AS(I),I=1,2)                                        COM02780
      WRITE(7,7572)AS(3)                                                COM02790
      WRITE(7,6399)                                                     COM02800
 4572 FORMAT(' ',10X,'|',2X,3(D13.6,2X),'|')                            COM02810
 4573 FORMAT(' ',5X,'Aij=',1X,'|',17X,2(D13.6,2X),'|','  i,j=1,2,6')    COM02820
 4574 FORMAT(' ',10X,'|',32X,D13.6,2X,'|')                              COM02830
 5573 FORMAT(' ',5X,'Bij=',1X,'|',17X,2(D13.6,2X),'|','  i,j=1,2,6')    COM02840
 7573 FORMAT(' ',5X,'Dij=',1X,'|',17X,2(D13.6,2X),'|','  i,j=1,2,6')    COM02850
 7571 FORMAT(' ',1X,'A44,A45=',1X,'|',2X,2(D13.6,2X),'|')               COM02860
 7572 FORMAT(' ',5X,'A55=',1X,'|',17X,D13.6,2X,'|')                     COM02870
      WRITE(7,3076)RH                                                   COM02880
 3076 FORMAT(' ','AVERAGE DENSITY=',D13.6)                              COM02890
C                                                                       COM02900
C*-*-*-*-*-*-*-*-*-*-*-*-*-*-*-*-*-*-*-*-*-*-*-*-*-*-*-*-*-*-*-*-*-*-*COM02910
C                                                                       COM02920
C. . . . . . . . . . . . . . . . . . . . . . . . . . . . . . . . . . . .COM02930
C                                                                       COM02940
C     COMPUTATION OF HALF BAND WIDTH                                    COM02950
C                                                                       COM02960
C. . . . . . . . . . . . . . . . . . . . . . . . . . . . . . . . . . . .COM02970
 3100 NHBW=0                                                            COM02980
      DO 3110 N=1,NEM                                                   COM02990
      DO 3110 I=1,NPE                                                   COM03000
      DO 3110 J=1,NPE                                                   COM03010
      NW=(IABS(NOD(N,I)-NOD(N,J))+1)*NDF                                COM03020
 3110 IF (NHBW.LT.NW) NHBW=NW                                           COM03030
      NBW=NHBW*2                                                        COM03040
      WRITE(7,3400)NHBW,NBW                                             COM03050
 3400 FORMAT(' ','HALF BAND WIDTH=',I2,'  FULL BAND WIDTH=',I3)         COM03060
      NEQ=NNM*NDF                                                       COM03070
      DO 288 I=1,NEQ                                                    COM03080
      GF0(I)=0.D0                                                       COM03090
      GF1(I)=0.D0                                                       COM03100
      GF2(I)=0.D0                                                       COM03110
 288  U(I)=SEED                                                         COM03120
      DO 3458 I=1,NBDY                                                  COM03130
       U(IBDY(I))=VBDY(I)                                               COM03140
 3458 VBDY(I)=0.D0                                                      COM03150
      READ(5,*)ITEMP                                                    COM03160
C*-*-*-*-*-*-*-*-*-*-*-*-*-*-*-*-*-*-*-*-*-*-*-*-*-*-*-*-*-*-*-*-*-*-*COM03170
C                                                                       COM03180
C                                                                       COM03190
C     BEGIN TIME DO LOOP                                                COM03200
C                                                                       COM03210
C- - - - - - - - - - - - - - - - - - - - - - - - - - - - - - - - - - - - -COM03220
C                                                                       COM03230
      TIME=DELT                                                         COM03240
      IF(ITIM.EQ.0)GOTO 179                                             COM03250
C     NT1=NT+1                                                          COM03260
      DO 1999 NTIM=1,NT                                                 COM03270
      IF(NTIM.GT.80)GOTO 1001                                           COM03280
C- - - - - - - - - - - - - - - - - - - - - - - - - - - - - - - - - - - - -COM03290
C                                                                       COM03300
C     TEMPERATURE INDUCED FORCES                                        COM03310
C                                                                       COM03320
C- - - - - - - - - - - - - - - - - - - - - - - - - - - - - - - - - - - - -COM03330
 179  DO 5820  ILOAD=1,NLOAD                                            COM03340
      Q=PINIT+PDELT*(ILOAD-1)                                           COM03350
      IF(ITEMP.EQ.1)THEN                                                COM03360
```

```
      NNN=NL+1                                                          COM03370
C     READ(5,*)((TEM(I,J),I=1,NNN),J=1,NNM)                             COM03380
C                                                                       COM03390
      DO 9333 I=1,NNN                                                   COM03400
 9333 READ(5,*)(TEM(I,J),J=1,NNM)                                       COM03410
C     DO 9444 J=1,NNM                                                   COM03420
C9444 WRITE(7,8368)(TEM(I,J),I=1,NNN)                                   COM03430
C8368 FORMAT(' ',2(D13.6,3X))                                           COM03440
C                                                                       COM03450
      DO 39 J=1,NNM                                                     COM03460
       TNX(J)=0.D0                                                      COM03470
       TNY(J)=0.D0                                                      COM03480
       TNXY(J)=0.D0                                                     COM03490
       TMX(J)=0.D0                                                      COM03500
       TMY(J)=0.D0                                                      COM03510
       TMXY(J)=0.D0                                                     COM03520
       DO 39 I=1,NL                                                     COM03530
        II=I+1                                                          COM03540
        TEMT1=T(I)*(.5D0*(TEM(I,J) +TEM(II,J))-TEO)                     COM03550
        TEMT2=T(I)*(TEM(I,J)*(ZB(I)/2.D0+T(I)/12.D0)+                   COM03560
     &  TEM(II,J)*(ZB(I)/2.D0-T(I)/12.D0)-TEO*ZB(I))                    COM03570
        TNX(J)=(QB(I,1)*ALPX(I)+QB(I,2)*ALPY(I)+QB(I,3)*ALPXY(I))*TEMT1 COM03580
     &  +TNX(J)                                                         COM03590
        TNY(J)=(QB(I,2)*ALPX(I)+QB(I,4)*ALPY(I)+QB(I,5)*ALPXY(I))*TEMT1 COM03600
     &  +TNY(J)                                                         COM03610
        TNXY(J)=(QB(I,3)*ALPX(I)+QB(I,5)*ALPY(I)+QB(I,6)*ALPXY(I))*TEMT1COM03620
     &  +TNXY(J)                                                        COM03630
        TMX(J)=(QB(I,1)*ALPX(I)+QB(I,2)*ALPY(I)+QB(I,3)*ALPXY(I))*TEMT2 COM03640
     &  +TMX(J)                                                         COM03650
        TMY(J)=(QB(I,2)*ALPX(I)+QB(I,4)*ALPY(I)+QB(I,5)*ALPXY(I))*TEMT2 COM03660
     &  +TMY(J)                                                         COM03670
       TMXY(J)=(QB(I,3)*ALPX(I)+QB(I,5)*ALPY(I)+QB(I,6)*ALPXY(I))*TEMT2 COM03680
     &  +TMXY(J)                                                        COM03690
 39    CONTINUE                                                         COM03700
      ELSE                                                              COM03710
      DO 1139 J=1,NNM                                                   COM03720
       TNX(J)=0.D0                                                      COM03730
       TNY(J)=0.D0                                                      COM03740
       TNXY(J)=0.D0                                                     COM03750
       TMX(J)=0.D0                                                      COM03760
       TMY(J)=0.D0                                                      COM03770
 1139 TMXY(J)=0.D0                                                      COM03780
      ENDIF                                                             COM03790
C                                                                       COM03800
C                                                                       COM03810
C     LOOP ON NONLINEARITY                                              COM03820
C                                                                       COM03830
C                                                                       COM03840
      DO 999 ITER=1,ITMAX                                               COM03850
      IF(ITMAX.GT.30)GOTO 1001                                          COM03860
      DO 80 I=1,NEQ                                                     COM03870
       GR(I)=0.D0                                                       COM03880
      DO 80 J=1,NHBW                                                    COM03890
 80   GSTIF(I,J)=0.D0                                                   COM03900
      DO 100 N=1,NEM                                                    COM03910
C                                                                       COM03920
C      JUNK                                                             COM03930
C     WRITE(7,2087)N                                                    COM03940
C2087 FORMAT(' ','ELEMENT # =',I1)                                      COM03950
C                                                                       COM03960
C                                                                       COM03970
       DO 91 I=1,NPE                                                    COM03980
       NET=NDF*(I-1)                                                    COM03990
        NAT=NDF*(NOD(N,I)-1)                                            COM04000
       DO 91 J=1,NDF                                                    COM04010
        NIT=J+NAT                                                       COM04020
        IJ=J+NET                                                        COM04030
        ELUU(IJ)=GF0(NIT)                                               COM04040
        ELU1(IJ)=GF1(NIT)                                               COM04050
        ELU2(IJ)=GF2(NIT)                                               COM04060
 91     ELU(IJ)=U(NIT)                                                  COM04070
```

```
      DO 90 I=1,NPE                                                     COM04080
      TTNX(I)=TNX(NOD(N,I))                                             COM04090
      TTNY(I)=TNY(NOD(N,I))                                             COM04100
      TTNXY(I)=TNXY(NOD(N,I))                                           COM04110
      TTMX(I)=TMX(NOD(N,I))                                             COM04120
      TTMY(I)=TMY(NOD(N,I))                                             COM04130
      TTMXY(I)=TMXY(NOD(N,I))                                           COM04140
      ELXY(I,2)=Y(NOD(N,I))                                             COM04150
 90   ELXY(I,1)=X(NOD(N,I))                                             COM04160
     CALL STIFF(IELEM,NN,NPE,NDF,ELXY,Q)                                COM04170
C                                                                       COM04180
C    ASSEMBLE ELEMENT STIFFNESS MATRICES TO GET GLOBAL STIFFNESS        COM04190
     DO 280 I=1,NPE                                                     COM04200
      NR=(NOD(N,I)-1)*NDF                                               COM04210
      DO 280 II=1,NDF                                                   COM04220
       NR=NR+1                                                          COM04230
       L=(I-1)*NDF+II                                                   COM04240
       GR(NR)=GR(NR)+R(L)                                               COM04250
       DO 260 J=1,NPE                                                   COM04260
        NCL=(NOD(N,J)-1)*NDF                                            COM04270
        DO 260 JJ=1,NDF                                                 COM04280
         M=(J-1)*NDF+JJ                                                 COM04290
         NC=NCL+JJ+1-NR                                                 COM04300
         IF(NC.LE.0)GOTO 260                                            COM04310
         GSTIF(NR,NC)=GSTIF(NR,NC)+ELKT(L,M)                            COM04320
  260   CONTINUE                                                        COM04330
  280 CONTINUE                                                          COM04340
 100  CONTINUE                                                          COM04350
C                                                                       COM04360
C                                                                       COM04370
 111  IF(NBF.EQ.0)GOTO 110                                              COM04380
      DO 120 NF=1,NBF                                                   COM04390
       NB=IBF(NF)                                                       COM04400
 120  GR(NB)=GR(NB)-VBF(NF)                                             COM04410
C-----------------------------------------------------------------------COM04420
C    ASSEMBLED MATRIX EQUATIONS ARE NOW READY FOR IMPLEMENTATION OF     COM04430
C      THE BOUNDARY CONDITIONS ON PRIMARY AND SECONDARY VARIABLES       COM04440
C-----------------------------------------------------------------------COM04450
 110  CALL BNDY(NRMAX,NCMAX,NEQ,NHBW,GSTIF,GR,NBDY,IBDY,VBDY)           COM04460
      IRES=0                                                            COM04470
      CALL SOLVE (NRMAX,NCMAX,NEQ,NHBW,GSTIF,GR,IRES)                   COM04480
C-----------------------------------------------------------------------COM04490
C    CALL SUBROUTINE 'SOLVE' TO SOLVE THE SYSTEM OF EQUATIONS FOR THE   COM04500
C    PRIMARY DEGREES OF FREEDOM (THE SOLUTION IS RETURNED IN ARRAY GR   COM04510
C-----------------------------------------------------------------------COM04520
C                                                                       COM04530
C                                                                       COM04540
C     LEAST-SQUARES ERROR MEASUREMENT                                   COM04550
C                                                                       COM04560
      ERR1=0.D0                                                         COM04570
      ERR2=0.D0                                                         COM04580
      DO 43 I=1,NEQ                                                     COM04590
C     WRITE(7,768)I,U(I),GR(I)                                          COM04600
C768  FORMAT(' ',I3,2(D13.6,2X))                                        COM04610
       ERR1=ERR1+GR(I)**2                                               COM04620
 43   ERR2=ERR2+(GR(I)+U(I))**2                                         COM04630
      IF(ERR2.EQ.0.)GOTO 1000                                           COM04640
      ERROR=SQRT(ERR1/ERR2)                                             COM04650
      DO 44 I=1,NEQ                                                     COM04660
 44   U(I)=U(I)+GR(I)                                                   COM04670
      IF(ERROR.LT.TOLER)GOTO 1000                                       COM04680
 999  CONTINUE                                                          COM04690
      WRITE(7,998)                                                      COM04700
  998 FORMAT(' ','SORRY, IT DID NOT CONVERGE')                          COM04710
      GOTO 1001                                                         COM04720
 1000 WRITE(7,6399)                                                     COM04730
      WRITE(7,612)                                                      COM04740
      WRITE(7,6399)                                                     COM04750
      WRITE(7,944)Q,TIME                                                COM04760
 944  FORMAT(' ','FOR Q=',F12.3,5X,'AT TIME=',F12.9)                    COM04770
      WRITE(7,933)ITER                                                  COM04780
```

```
933   FORMAT(' ','IT CONVERGED AFTER ',I2,' ITERATIONS')                COM04790
      WRITE(7,7458)                                                     COM04800
612   FORMAT(' ','                SOLUTION                ',/)          COM04810
7458  FORMAT(' ','NODE',5X,'U',11X,'V',11X,'W',10X,'PHIX',9X,'PHIY')    COM04820
      DO 3348 I=1,NNM                                                   COM04830
      II=1+NDF*(I-1)                                                    COM04840
      III=II+NDF-1                                                      COM04850
3348  WRITE(7,610)I,(U(J),J=II,III)                                     COM04860
610   FORMAT(' ',I3,2X,5(D10.4,2X))                                     COM04870
5820  CONTINUE                                                          COM04880
      IF(ITIM.EQ.0)GOTO 1001                                            COM04890
      TIME=TIME+DELT                                                    COM04900
      DO 180 I=1,NEQ                                                    COM04910
       GF0(I)=SA0*(U(I)-GF0(I))-SA1*GF1(I)-SA2*GF2(I)                   COM04920
       GF1(I)=GF1(I)+SA3*GF2(I)+GF0(I)*SA3                              COM04930
       GF2(I)=GF0(I)                                                    COM04940
180   GF0(I)=U(I)                                                       COM04950
1999  CONTINUE                                                          COM04960
1001  CONTINUE                                                          COM04970
      STOP                                                              COM04980
      END                                                               COM04990
      SUBROUTINE STIFF(IELEM,NN,NPE,NDF,ELXY,Q)                         COM05000
      IMPLICIT REAL*8(A-H,O-Z)                                          COM05010
      COMMON/STF1/ELKT(45,45),R(45),A(6),B(6),D(6),AS(3)                COM05020
      COMMON/STF2/SA0,SA1,SA2,SA3,SA4,XIN1,XIN2                         COM05030
      COMMON/STF3/ELUU(45),ELU(45),ELU1(45),ELU2(45)                    COM05040
      COMMON/STF4/TTNX(9),TTNY(9),TTNXY(9),TTMX(9),TTMY(9),TTMXY(9)     COM05050
      COMMON/SHP/GDSF(2,9),SF(9)                                        COM05060
      DIMENSION GAUSS(4,4),WT(4,4),ELXY(9,2),TU(45),ELF3(9),ELF1(9)     COM05070
      DIMENSION ELF2(9),ELF4(9),ELF5(9),TUU(45),TU1(45),TU2(45)         COM05080
      DIMENSION TK11(9,9),TK12(9,9),TK13(9,9),TK14(9,9),TK15(9,9)       COM05090
      DIMENSION TK21(9,9),TK22(9,9),TK23(9,9),TK24(9,9),TK25(9,9)       COM05100
      DIMENSION TK31(9,9),TK32(9,9),TK33(9,9),TK34(9,9),TK35(9,9)       COM05110
      DIMENSION TK41(9,9),TK42(9,9),TK43(9,9),TK44(9,9),TK45(9,9)       COM05120
      DIMENSION TK51(9,9),TK52(9,9),TK53(9,9),TK54(9,9),TK55(9,9)       COM05130
      DIMENSION XK33(9,9),G33(9,9),G34(9,9),G35(9,9),G43(9,9)           COM05140
      DIMENSION G44(9,9),G45(9,9),G53(9,9),G54(9,9),G55(9,9),GMASS(9,9) COM05150
      DATA GAUSS/4*0.0D0,-.57735027D0,.57735027D0,2*0.0D0,-.77459667D0, COM05160
     *0.0D0,.77459667D0,0.0D0,-.86113631D0,                             COM05170
     *-.33998104D0,.33998104D0,.86113631D0/                             COM05180
      DATA WT/2.0D0,3*0.0D0,2*1.0D0,2*0.0D0,.5555555D0,.88888888D0,     COM05190
     *.55555555D0,0.0D0,.34785485D0,2*.65214515D0,.34785485D0/          COM05200
      NGP=IELEM                                                         COM05210
C                                                                       COM05220
C      REARRANGE U                                                      COM05230
C                                                                       COM05240
       NC1=1                                                            COM05250
       NC2=2                                                            COM05260
       NC3=3                                                            COM05270
       NC4=4                                                            COM05280
       NC5=5                                                            COM05290
       DO 892 I=1,NPE                                                   COM05300
       I2=I+NPE                                                         COM05310
       I3=I2+NPE                                                        COM05320
       I4=I3+NPE                                                        COM05330
       I5=I4+NPE                                                        COM05340
       TUU(I)=ELUU(NC1)                                                 COM05350
       TUU(I2)=ELUU(NC2)                                                COM05360
       TUU(I3)=ELUU(NC3)                                                COM05370
       TUU(I4)=ELUU(NC4)                                                COM05380
       TUU(I5)=ELUU(NC5)                                                COM05390
       TU(I)=ELU(NC1)                                                   COM05400
       TU(I2)=ELU(NC2)                                                  COM05410
       TU(I3)=ELU(NC3)                                                  COM05420
       TU(I4)=ELU(NC4)                                                  COM05430
       TU(I5)=ELU(NC5)                                                  COM05440
       TU1(I)=ELU1(NC1)                                                 COM05450
       TU1(I2)=ELU1(NC2)                                                COM05460
       TU1(I3)=ELU1(NC3)                                                COM05470
       TU1(I4)=ELU1(NC4)                                                COM05480
       TU1(I5)=ELU1(NC5)                                                COM05490
```

```
      TU2(I)=ELU2(NC1)                                                  COM05500
      TU2(I2)=ELU2(NC2)                                                 COM05510
      TU2(I3)=ELU2(NC3)                                                 COM05520
      TU2(I4)=ELU2(NC4)                                                 COM05530
      TU2(I5)=ELU2(NC5)                                                 COM05540
      NC1=NC1+NDF                                                       COM05550
      NC2=NC2+NDF                                                       COM05560
      NC3=NC3+NDF                                                       COM05570
      NC4=NC4+NDF                                                       COM05580
 892  NC5=NC5+NDF                                                       COM05590
C                                                                       COM05600
C     INITIALIZE  MATRICES                                              COM05610
C                                                                       COM05620
      DO 415 I=1,NN                                                     COM05630
      R(I)=0.D0                                                         COM05640
      DO 415 J=1,NN                                                     COM05650
 415  ELKT(I,J)=0.D0                                                    COM05660
      DO 416 I=1,NPE                                                    COM05670
      ELF1(I)=0.D0                                                      COM05680
      ELF2(I)=0.D0                                                      COM05690
      ELF3(I)=0.D0                                                      COM05700
      ELF4(I)=0.D0                                                      COM05710
      ELF5(I)=0.D0                                                      COM05720
      DO 416 J=1,NPE                                                    COM05730
       GMASS(I,J)=0.D0                                                  COM05740
       TK11(I,J)=0.D0                                                   COM05750
       TK12(I,J)=0.D0                                                   COM05760
       TK13(I,J)=0.D0                                                   COM05770
       TK14(I,J)=0.D0                                                   COM05780
       TK15(I,J)=0.D0                                                   COM05790
       TK21(I,J)=0.D0                                                   COM05800
       TK22(I,J)=0.D0                                                   COM05810
       TK23(I,J)=0.D0                                                   COM05820
       TK24(I,J)=0.D0                                                   COM05830
       TK25(I,J)=0.D0                                                   COM05840
       TK31(I,J)=0.D0                                                   COM05850
       TK32(I,J)=0.D0                                                   COM05860
       TK33(I,J)=0.D0                                                   COM05870
       TK34(I,J)=0.D0                                                   COM05880
       TK35(I,J)=0.D0                                                   COM05890
       TK41(I,J)=0.D0                                                   COM05900
       TK42(I,J)=0.D0                                                   COM05910
       TK43(I,J)=0.D0                                                   COM05920
       TK44(I,J)=0.D0                                                   COM05930
       TK45(I,J)=0.D0                                                   COM05940
       TK51(I,J)=0.D0                                                   COM05950
       TK52(I,J)=0.D0                                                   COM05960
       TK53(I,J)=0.D0                                                   COM05970
       TK54(I,J)=0.D0                                                   COM05980
       TK55(I,J)=0.D0                                                   COM05990
       XX33(I,J)=0.D0                                                   COM06000
       G33(I,J)=0.D0                                                    COM06010
       G34(I,J)=0.D0                                                    COM06020
       G35(I,J)=0.D0                                                    COM06030
       G43(I,J)=0.D0                                                    COM06040
       G44(I,J)=0.D0                                                    COM06050
       G45(I,J)=0.D0                                                    COM06060
       G53(I,J)=0.D0                                                    COM06070
       G54(I,J)=0.D0                                                    COM06080
 416   G55(I,J)=0.D0                                                    COM06090
C                                                                       COM06100
C                                                                       COM06110
C     THIS LOOP REPRESENTS THE SUMMATION OF THE GAUSS POINTS            COM06120
C     CONTRIBUTION TO KT & Q.                                           COM06130
C                                                                       COM06140
C                                                                       COM06150
      DO 400 IGP=1,NGP                                                  COM06160
       XI=GAUSS(IGP,NGP)                                                COM06170
       DO 400 JGP=1,NGP                                                 COM06180
        ETA=GAUSS(JGP,NGP)                                              COM06190
C                                                                       COM06200
```

```
C     "GAUSS" CONTAINS THE GAUSS POINTS IN AN ARRAY WITH EACH COLUMN
C     CONTAINING THE XI FOR 1, 2, 3, AND 4 GAUSS POINTS RESPECTIVELY
C
C
      CALL SHAPE(XI,ETA,NPE,ELXY,IELEM,DET)
C
C
C     "SHAPE" CALCULATES THE JACOBIAN (GJ), THE LOCAL INTERPOLATION
C     FUNCTIONS (SF), AND THEIR DERIVATIVES (DSF). AND PUTS THE LOCAL
C     DERIVATIVES INTO GLOBAL TERMS.
C     GDSF=DSF/GJ
C
       DWX=0.D0
       DWY=0.D0
       DUX=0.D0
       DUY=0.D0
       DVX=0.D0
       DVY=0.D0
       DFXX=0.D0
       DFXY=0.D0
       DFYX=0.D0
       DFYY=0.D0
       TNX=0.D0
       TNY=0.D0
       TNXY=0.D0
       TMX=0.D0
       TMY=0.D0
       TMXY=0.D0
       DO 150 I=1,NPE
        II=I+NPE
        III=II+NPE
        I4=III+NPE
        I5=I4+NPE
        TNX=TNX+TTNX(I)*SF(I)
        TNY=TNY+TTNY(I)*SF(I)
        TNXY=TNXY+TTNXY(I)*SF(I)
        TMX=TMX+TTMX(I)*SF(I)
        TMY=TMY+TTMY(I)*SF(I)
        TMXY=TMXY+TTMXY(I)*SF(I)
C
C       JUNK
C       WRITE(7,615)
C       WRITE(7,618)TTNX(I),TNX,TTNY(I),TNY
C       WRITE(7,616)
C       WRITE(7,618)TTMX(I),TMX,TTMY(I),TMY
C       WRITE(7,617)
C       WRITE(7,618)TTMXY(I),TMXY,TTNXY(I),TNXY
C615    FORMAT(' ',3X,'TTNX(I)',10X,'TNX',10X,'TTNY(I)',10X,'TNY')
C616    FORMAT(' ',3X,'TTMX(I)',10X,'TMX',10X,'TTMY(I)',10X,'TMY')
C617    FORMAT(' ',2X,'TTMXY(I)',9X,'TMXY',9X,'TTNXY(I)',9X,'TNXY')
C618    FORMAT(' ',4(D13.6,2X))
C
        DFYX=DFYX+GDSF(1,I)*TU(I5)
        DFYY=DFYY+GDSF(2,I)*TU(I5)
        DFXX=DFXX+GDSF(1,I)*TU(I4)
        DFXY=DFXY+GDSF(2,I)*TU(I4)
        DWX=DWX+GDSF(1,I)*TU(III)
        DWY=DWY+GDSF(2,I)*TU(III)
        DVX=DVX+GDSF(1,I)*TU(II)
        DVY=DVY+GDSF(2,I)*TU(II)
        DUX=DUX+GDSF(1,I)*TU(I)
 150    DUY=DUY+GDSF(2,I)*TU(I)
        G=TNX*DWX+TNXY*DWY
        H=TNXY*DWX+TNY*DWY
        CONST=WT(IGP,NGP)*WT(JGP,NGP)*DET
        CONA11=A(1)*WT(IGP,NGP)*WT(JGP,NGP)*DET
        CONA12=A(2)*WT(IGP,NGP)*WT(JGP,NGP)*DET
        CONA16=A(3)*WT(IGP,NGP)*WT(JGP,NGP)*DET
        CONA22=A(4)*WT(IGP,NGP)*WT(JGP,NGP)*DET
        CONA26=A(5)*WT(IGP,NGP)*WT(JGP,NGP)*DET
        CONA66=A(6)*WT(IGP,NGP)*WT(JGP,NGP)*DET
```

```
      CONB11=B(1)*WT(IGP,NGP)*WT(JGP,NGP)*DET                           COM06920
      CONB12=B(2)*WT(IGP,NGP)*WT(JGP,NGP)*DET                           COM06930
      CONB16=B(3)*WT(IGP,NGP)*WT(JGP,NGP)*DET                           COM06940
      CONB22=B(4)*WT(IGP,NGP)*WT(JGP,NGP)*DET                           COM06950
      CONB26=B(5)*WT(IGP,NGP)*WT(JGP,NGP)*DET                           COM06960
      CONB66=B(6)*WT(IGP,NGP)*WT(JGP,NGP)*DET                           COM06970
      COND11=D(1)*WT(IGP,NGP)*WT(JGP,NGP)*DET                           COM06980
      COND12=D(2)*WT(IGP,NGP)*WT(JGP,NGP)*DET                           COM06990
      COND16=D(3)*WT(IGP,NGP)*WT(JGP,NGP)*DET                           COM07000
      COND22=D(4)*WT(IGP,NGP)*WT(JGP,NGP)*DET                           COM07010
      COND26=D(5)*WT(IGP,NGP)*WT(JGP,NGP)*DET                           COM07020
      COND66=D(6)*WT(IGP,NGP)*WT(JGP,NGP)*DET                           COM07030
      CONQ=Q*WT(IGP,NGP)*WT(JGP,NGP)*DET                                COM07040
      DO 160 I=1,NPE                                                    COM07050
       DO 159 J=1,NPE                                                   COM07060
        XX=GDSF(1,J)*GDSF(1,I)                                          COM07070
        YY=GDSF(2,J)*GDSF(2,I)                                          COM07080
        XIYJ=GDSF(2,J)*GDSF(1,I)                                        COM07090
        XJYI=GDSF(1,J)*GDSF(2,I)                                        COM07100
        GMASS(I,J)=GMASS(I,J)+CONST*SF(I)*SF(J)                         COM07110
        TK11(I,J)=CONA11*XX+CONA66*YY+TK11(I,J)+CONA16*(XIYJ+XJYI)      COM07120
        TK12(I,J)=CONA12*XIYJ+CONA66*XJYI+CONA16*XX+CONA26*YY           COM07130
     &   +TK12(I,J)                                                     COM07140
        TK13(I,J)=CONA11*XX*DWX/2.D0+CONA12*XIYJ*DWY/2.D0+              COM07150
     &   CONA66*GDSF(2,I)                                               COM07160
     &   *(DWX*GDSF(2,J)+DWY*GDSF(1,J))/2.D0+CONA26*YY*DWY/2.D0         COM07170
     &   +CONA16*(XIYJ*DWX+XX*DWY+XJYI*DWX)/2.D0+TK13(I,J)              COM07180
        TK14(I,J)=CONB11*XX+CONB16*(XJYI+XIYJ)+CONB66*YY+TK14(I,J)      COM07190
        TK15(I,J)=CONB16*XX+CONB66*XJYI+CONB12*XIYJ+CONB26*YY+          COM07200
     &   TK15(I,J)                                                      COM07210
        TK21(I,J)=CONA66*XIYJ+CONA12*XJYI+CONA16*XX+CONA26*YY+          COM07220
     &   TK21(I,J)                                                      COM07230
        TK22(I,J)=CONA66*XX+CONA22*YY+CONA26*(XIYJ+XJYI)+TK22(I,J)      COM07240
        TK23(I,J)=(CONA66*(XX*DWY+XIYJ*DWX)+CONA12*XJYI*DWX+CONA22      COM07250
     &   *DWY*YY+CONA16*XX*DWX+CONA26*(XIYJ*DWY+YY*DWX+XJYI*DWY))       COM07260
     &   /2.D0+TK23(I,J)                                                COM07270
        TK24(I,J)=CONB16*XX+CONB66*XIYJ+CONB12*XJYI+CONB26*YY+          COM07280
     &   TK24(I,J)                                                      COM07290
        TK25(I,J)=CONB66*XX+CONB26*(XJYI+XIYJ)+CONB22*YY+TK25(I,J)      COM07300
        TK31(I,J)=CONA11*XX*DWX+CONA66*(DWY*XIYJ+DWX*YY)+CONA12*DWY*    COM07310
     &   XJYI+CONA16*(XIYJ*DWX+DWY*XX+XJYI*DWX)+CONA26*YY*DWY+          COM07320
     &   TK31(I,J)                                                      COM07330
      TK32(I,J)=CONA12*DWX*XIYJ+CONA66*(DWY*XX+DWX*XJYI)+CONA22*DWY*YY+ COM07340
     &CONA26*(XIYJ*DWY+YY*DWX+XJYI*DWY)+CONA16*XX*DWX+TK32(I,J)         COM07350
      TK33(I,J)=CONA11*XX*DWX*DWX/2.D0+CONA22*YY*DWY*DWY/2.D0+          COM07360
     &CONA66*DWY*DWX*(XIYJ+XJYI)+CONA12*(XX*DWY*DWY+YY*DWX*DWX)/2.D0+   COM07370
     &CONA16*(DWX*DWX*(XIYJ+XJYI)/2.D0+DWX*DWY*XX)+CONA26*              COM07380
     &(DWY*DWY*(XJYI+XIYJ)/2.D0+DWX*DWY*YY)+TK33(I,J)                   COM07390
      TK34(I,J)=CONB11*XX*DWX+CONB16*(XIYJ*DWX+XX*DWY+XJYI*DWX)+CONB26* COM07400
     &YY*DWY+CONB12*XJYI*DWY+CONB66*(XIYJ*DWY+YY*DWX)+TK34(I,J)         COM07410
      TK35(I,J)=CONB16*XX*DWX+CONB26*(XIYJ*DWY+YY*DWX+XJYI*DWY)+CONB22* COM07420
     &YY*DWY+CONB12*XIYJ*DWX+CONB66*(XJYI*DWX+XX*DWY)+TK35(I,J)         COM07430
      TK41(I,J)=TK41(I,J)+CONB11*XX+CONB66*YY+CONB16*(XIYJ+XJYI)        COM07440
      TK42(I,J)=TK42(I,J)+CONB12*XIYJ+CONB66*XJYI+CONB16*XX+CONB26*YY   COM07450
      TK43(I,J)=TK43(I,J)+(CONB12*XIYJ*DWY+CONB66*(XJYI*DWY+YY*DWX)+    COM07460
     & CONB26*YY*DWY+CONB16*(XIYJ*DWX+XX*DWY+XJYI*DWX)+                 COM07470
     & CONB11*XX*DWX)/2.D0                                              COM07480
      TK44(I,J)=TK44(I,J)+COND11*XX+COND66*YY+COND16*(XIYJ+XJYI)        COM07490
      TK45(I,J)=TK45(I,J)+COND12*XIYJ+COND66*XJYI+COND16*XX+COND26*YY   COM07500
      TK51(I,J)=TK51(I,J)+CONB12*XJYI+CONB66*XIYJ+CONB16*XX+CONB26*YY   COM07510
      TK52(I,J)=TK52(I,J)+CONB22*YY+CONB66*XX+CONB26*(XIYJ+XJYI)        COM07520
      TK53(I,J)=TK53(I,J)+(CONB12*XJYI*DWX+CONB66*(XIYJ*DWX+XX*DWY)+    COM07530
     & CONB22*YY*DWY+CONB26*(XIYJ*DWY+YY*DWX+XJYI*DWY)+                 COM07540
     & CONB16*XX*DWX)/2.D0                                              COM07550
      TK54(I,J)=TK54(I,J)+COND12*XJYI+COND66*XIYJ+COND16*XX+COND26*YY   COM07560
      TK55(I,J)=TK55(I,J)+COND22*YY+COND66*XX+COND26*(XIYJ+XJYI)        COM07570
      XK33(I,J)=XK33(I,J)+CONA11*(DWX*DWX+DUX)*XX+CONA12*(YY*DUX+XX*DVY COM07580
     & +DWY*DWX*(XIYJ+XJYI))+CONA16*(XX*(DUY+                           COM07590
     & DVX+2.D0*DWX*DWY)+(DUX+DWX*DWX)*(XIYJ+XJYI))                     COM07600
     & +CONA26*(YY*(DUY+DVX+2.D0*                                       COM07610
     & DWX*DWY)+(DWY*DWY+DVY)*(XIYJ+XJYI))+CONA66*(DWY*DWY*XX+YY*       COM07620
```

```
     & DWX*DWX+(XIYJ+XJYI)*(DUY+DVX+DWX*DWY))+CONA22*YY*(DVY+DWY*DWY)   COM07630
      XK33(I,J)=XK33(I,J)+CONB11*XX*DFXX+CONB16*(XX*DFXY+DFXX*(XIYJ+    COM07640
     &XJYI)+DFYX*XX)+CONB66*((DFXY+DFYX)*(XIYJ+XJYI))                   COM07650
     &+CONB12*(YY*DFXX+XX*DFYY)+CONB26*(YY*(DFXY+DFYX)+DFYY*(XIYJ+XJYI))COM07660
     &+CONB22*YY*DFYY                                                   COM07670
     &+CONST*GDSF(1,I)*(TNX*GDSF(1,J)+TNXY*GDSF(2,J))                   COM07680
     &+CONST*GDSF(2,I)*(TNY*GDSF(2,J)+TNXY*GDSF(1,J))                   COM07690
 159  CONTINUE                                                          COM07700
      ELF1(I)=ELF1(I)+(TNX*GDSF(1,I)+TNXY*GDSF(2,I))*CONST              COM07710
      ELF2(I)=ELF2(I)+(TNY*GDSF(2,I)+TNXY*GDSF(1,I))*CONST              COM07720
      ELF4(I)=ELF4(I)+(TMX*GDSF(1,I)+TMXY*GDSF(2,I))*CONST              COM07730
      ELF5(I)=ELF5(I)+(TMY*GDSF(2,I)+TMXY*GDSF(1,I))*CONST              COM07740
 160  ELF3(I)=ELF3(I)+CONQ*SF(I)+(G*GDSF(1,I)+H*GDSF(2,I))*CONST        COM07750
 400  CONTINUE                                                          COM07760
C                                                                       COM07770
C                                                                       COM07780
C     BEGIN REDUCED INTERGRATION                                        COM07790
C                                                                       COM07800
C                                                                       COM07810
      NGP=NGP-1                                                         COM07820
      DO 401 IGP=1,NGP                                                  COM07830
       XI=GAUSS(IGP,NGP)                                                COM07840
       DO 401 JGP=1,NGP                                                 COM07850
        ETA=GAUSS(JGP,NGP)                                              COM07860
       CALL SHAPE(XI,ETA,NPE,ELXY,IELEM,DET)                            COM07870
       CONA44=AS(1)*WT(IGP,NGP)*WT(JGP,NGP)*DET                         COM07880
       CONA45=AS(2)*WT(IGP,NGP)*WT(JGP,NGP)*DET                         COM07890
       CONA55=AS(3)*WT(IGP,NGP)*WT(JGP,NGP)*DET                         COM07900
       DO 402 I=1,NPE                                                   COM07910
       DO 402 J=1,NPE                                                   COM07920
        XX=GDSF(1,J)*GDSF(1,I)                                          COM07930
        YY=GDSF(2,J)*GDSF(2,I)                                          COM07940
        G33(I,J)=G33(I,J)+CONA55*XX+CONA44*YY+CONA45*(GDSF(2,J)         COM07950
     &   *GDSF(1,I)+GDSF(1,J)*GDSF(2,I))                                COM07960
        G34(I,J)=G34(I,J)+CONA55*GDSF(1,I)*SF(J)+CONA45*GDSF(2,I)*SF(J) COM07970
        G35(I,J)=G35(I,J)+CONA44*GDSF(2,I)*SF(J)+CONA45*GDSF(1,I)*SF(J) COM07980
        G43(I,J)=G43(I,J)+CONA55*GDSF(1,J)*SF(I)+CONA45*GDSF(2,J)*SF(I) COM07990
        G44(I,J)=G44(I,J)+CONA55*SF(I)*SF(J)                            COM08000
        G45(I,J)=G45(I,J)+CONA45*SF(I)*SF(J)                            COM08010
        G53(I,J)=G53(I,J)+CONA44*GDSF(2,J)*SF(I)+CONA45*GDSF(1,J)*SF(I) COM08020
        G54(I,J)=G54(I,J)+CONA45*SF(I)*SF(J)                            COM08030
 402   G55(I,J)=G55(I,J)+CONA44*SF(I)*SF(J)                             COM08040
 401   CONTINUE                                                         COM08050
C                                                                       COM08060
C                                                                       COM08070
C     ASSEMBLE ELEMENT KT & R MATRICES                                  COM08080
C                                                                       COM08090
C                                                                       COM08100
      II=1                                                              COM08110
      DO 170 I=1,NPE                                                    COM08120
        I2=II+1                                                         COM08130
        I3=II+2                                                         COM08140
        I4=II+3                                                         COM08150
        I5=II+4                                                         COM08160
        JJ=1                                                            COM08170
       DO 180 J=1,NPE                                                   COM08180
        J2=JJ+1                                                         COM08190
        J3=JJ+2                                                         COM08200
        J4=JJ+3                                                         COM08210
        J5=JJ+4                                                         COM08220
        JNPE=J+NPE                                                      COM08230
        J2NPE=J+2*NPE                                                   COM08240
        J3NPE=J+3*NPE                                                   COM08250
        J4NPE=J+4*NPE                                                   COM08260
        GM1=GMASS(I,J)*XIN1*SAO                                         COM08270
        GM2=GMASS(I,J)*XIN2*SAO                                         COM08280
        ELKT(II,JJ)=TK11(I,J)+GM1                                       COM08290
        ELKT(II,J2)=TK12(I,J)                                           COM08300
        ELKT(II,J3)=TK13(I,J)*2.D0                                      COM08310
        ELKT(II,J4)=TK14(I,J)                                           COM08320
        ELKT(II,J5)=TK15(I,J)                                           COM08330
```

```
      ELKT(I2,JJ)=TK21(I,J)                                             COM08340
      ELKT(I2,J2)=TK22(I,J)+GM1                                         COM08350
      ELKT(I2,J3)=TK23(I,J)*2.D0                                        COM08360
      ELKT(I2,J4)=TK24(I,J)                                             COM08370
      ELKT(I2,J5)=TK25(I,J)                                             COM08380
      ELKT(I3,JJ)=TK31(I,J)                                             COM08390
      ELKT(I3,J2)=TK32(I,J)                                             COM08400
      ELKT(I3,J3)=TK33(I,J)+XK33(I,J)+G33(I,J)+GM1                      COM08410
      ELKT(I3,J4)=G34(I,J)+TK34(I,J)                                    COM08420
      ELKT(I3,J5)=G35(I,J)+TK35(I,J)                                    COM08430
      ELKT(I4,JJ)=TK41(I,J)                                             COM08440
      ELKT(I4,J2)=TK42(I,J)                                             COM08450
      ELKT(I4,J3)=G43(I,J)+2.D0*TK43(I,J)                               COM08460
      ELKT(I4,J4)=TK44(I,J)+G44(I,J)+GM2                                COM08470
      ELKT(I4,J5)=TK45(I,J)+G45(I,J)                                    COM08480
      ELKT(I5,JJ)=TK51(I,J)                                             COM08490
      ELKT(I5,J2)=TK52(I,J)                                             COM08500
      ELKT(I5,J3)=G53(I,J)+2.D0*TK53(I,J)                               COM08510
      ELKT(I5,J4)=TK54(I,J)+G54(I,J)                                    COM08520
      ELKT(I5,J5)=TK55(I,J)+G55(I,J)+GM2                                COM08530
     R(II)=-(TK11(I,J)+GM1)*TU(J)-TK12(I,J)*TU(JNPE)-TK13(I,J)          COM08540
    &*TU(J2NPE)-TK14(I,J)*TU(J3NPE)-TK15(I,J)*TU(J4NPE)+R(II)+          COM08550
    &GMASS(I,J)*(SA0*TUU(J)+SA1*TU1(J)+SA2*TU2(J))*XIN1                 COM08560
     R(I2)=-TK21(I,J)*TU(J)-(TK22(I,J)+GM1)*TU(JNPE)-TK23(I,J)          COM08570
    &*TU(J2NPE)-TK24(I,J)*TU(J3NPE)-TK25(I,J)*TU(J4NPE)+R(I2)+          COM08580
    &GMASS(I,J)*(SA0*TUU(JNPE)+SA1*TU1(JNPE)+SA2*TU2(JNPE))*XIN1        COM08590
     R(I3)=-TK31(I,J)*TU(J)-TK32(I,J)*TU(JNPE)-(TK33(I,J)+G33(I,J)+GM1)COM08600
    &*TU(J2NPE)-(TK34(I,J)+G34(I,J))*TU(J3NPE)-(G35(I,J)+TK35(I,J))*    COM08610
    &TU(J4NPE)+R(I3)+                                                   COM08620
    &GMASS(I,J)*(SA0*TUU(J2NPE)+SA1*TU1(J2NPE)+SA2*TU2(J2NPE))*XIN1     COM08630
     R(I4)=-TK41(I,J)*TU(J)-TK42(I,J)*TU(JNPE)                          COM08640
    &-(G43(I,J)+TK43(I,J))*TU(J2NPE)-(TK44(I,J)+G44(I,J)+GM2)           COM08650
    &*TU(J3NPE)-(TK45(I,J)+G45(I,J))*TU(J4NPE)+R(I4)+                   COM08660
    &GMASS(I,J)*(SA0*TUU(J3NPE)+SA1*TU1(J3NPE)+SA2*TU2(J3NPE))*XIN2     COM08670
     R(I5)=-TK51(I,J)*TU(J)-TK52(I,J)*TU(JNPE)-(TK53(I,J)+G53(I,J))*    COM08680
    &TU(J2NPE)-(G54(I,J)+TK54(I,J))*TU(J3NPE)                           COM08690
    &-(TK55(I,J)+G55(I,J)+GM2)*TU(J4NPE)+R(I5)+                         COM08700
    &GMASS(I,J)*(SA0*TUU(J4NPE)+SA1*TU1(J4NPE)+SA2*TU2(J4NPE))*XIN2     COM08710
  180 JJ=NDF*J+1                                                        COM08720
      R(II)=R(II)+ELF1(I)                                               COM08730
      R(I2)=R(I2)+ELF2(I)                                               COM08740
      R(I3)=R(I3)+ELF3(I)                                               COM08750
      R(I4)=R(I4)+ELF4(I)                                               COM08760
      R(I5)=R(I5)+ELF5(I)                                               COM08770
  170 II=NDF*I+1                                                        COM08780
C     DO 8972 I=1,NPE                                                   COM08790
C8972 WRITE(7,2777)ELF1(I),ELF2(I),ELF3(I),ELF4(I),ELF5(I)              COM08800
 2777 FORMAT(' ',5(D12.5,2X))                                           COM08810
      RETURN                                                            COM08820
      END                                                               COM08830
      SUBROUTINE SHAPE(XI,ETA,NPE,ELXY,IELEM,DET)                       COM08840
      IMPLICIT REAL*8(A-H,O-Z)                                          COM08850
      COMMON/SHP/GDSF(2,9),SF(9)                                        COM08860
      DIMENSION DSF(2,9),ELXY(9,2),GJ(2,2),GJINV(2,2),XSIGN(9,2),NP(9)  COM08870
      DATA XSIGN/-1.0D0,2*1.0D0,-1.0D0,0.0D0,1.0D0,0.0D0,-1.0D0,0.0D0,  COM08880
     &2*-1.0D0,2*1.0D0,-1.0D0,0.0D0,1.0D0,2*0.0D0/                      COM08890
      DATA NP/1,2,3,4,5,7,6,8,9/                                        COM08900
      IF(NPE.EQ.8)GOTO 800                                              COM08910
      IF(NPE.EQ.9)GOTO 900                                              COM08920
C                                                                       COM08930
C     LINEAR INTERPOLATION FUNCTIONS                                    COM08940
C                                                                       COM08950
      DO 410 I=1,4                                                      COM08960
       XP=XSIGN(I,1)                                                    COM08970
       YP=XSIGN(I,2)                                                    COM08980
       XI0=1.D0+XI*XP                                                   COM08990
       ETA0=1.D0+ETA*YP                                                 COM09000
       SF(I)=.25D0*XI0*ETA0                                             COM09010
       DSF(1,I)=.25D0*XP*ETA0                                           COM09020
 410   DSF(2,I)=.25D0*YP*XI0                                            COM09030
```

```
      GOTO 100                                                          COM09040
C                                                                       COM09050
C       QUADRATIC INTERPOLATION FUNCTIONS (EIGHT-NODE ELEMENTS)         COM09060
C                                                                       COM09070
 800  DO 810 I=1,8                                                      COM09080
       NI=NP(I)                                                         COM09090
       XP=XSIGN(NI,1)                                                   COM09100
       YP=XSIGN(NI,2)                                                   COM09110
       XI0=1.D0+XI*XP                                                   COM09120
       ETA0=1.D0+ETA*YP                                                 COM09130
       XI1=1.D0-XI*XI                                                   COM09140
       ETA1=1.D0-ETA*ETA                                                COM09150
       IF(I.GT.4)GOTO 820                                               COM09160
       SF(NI)=.25D0*XI0*ETA0*(XI*XP+ETA*YP-1.D0)                        COM09170
       DSF(1,NI)=.25D0*XP*ETA0*(2.D0*XI*XP+ETA*YP)                      COM09180
       DSF(2,NI)=.25D0*YP*XI0*(2.D0*ETA*YP+XI*XP)                       COM09190
       GOTO 810                                                         COM09200
 820   IF(I.GT.6)GOTO 830                                               COM09210
       SF(NI)=.5D0*XI1*ETA0                                             COM09220
       DSF(1,NI)=-XI*ETA0                                               COM09230
       DSF(2,NI)=.5D0*YP*XI1                                            COM09240
       GOTO 810                                                         COM09250
 830   SF(NI)=.5D0*ETA1*XI0                                             COM09260
       DSF(1,NI)=.5D0*XP*ETA1                                           COM09270
       DSF(2,NI)=-ETA*XI0                                               COM09280
 810   CONTINUE                                                         COM09290
       GOTO 100                                                         COM09300
C                                                                       COM09310
C       QUADRATIC INTERPOLATION FUNCTIONS (NINE-NODE ELEMENTS)          COM09320
C                                                                       COM09330
  900 DO 910 I=1,9                                                      COM09340
       NI=NP(I)                                                         COM09350
       XP=XSIGN(NI,1)                                                   COM09360
       YP=XSIGN(NI,2)                                                   COM09370
       XI0=1.D0+XI*XP                                                   COM09380
       ETA0=1.D0+ETA*YP                                                 COM09390
       XI1=1.D0-XI*XI                                                   COM09400
       ETA1=1.D0-ETA*ETA                                                COM09410
       XI2=XP*XI                                                        COM09420
       ETA2=YP*ETA                                                      COM09430
       IF(I.GT.4)GOTO 920                                               COM09440
       SF(NI)=.25D0*XI0*ETA0*XI2*ETA2                                   COM09450
       DSF(1,NI)=.25D0*XP*ETA0*ETA2*(1.D0+2.D0*XI2)                     COM09460
       DSF(2,NI)=.25D0*YP*XI0*XI2*(1.D0+2.D0*ETA2)                      COM09470
       GOTO 910                                                         COM09480
 920   IF(I.GT.6)GOTO 930                                               COM09490
       SF(NI)=.5D0*XI1*ETA0*ETA2                                        COM09500
       DSF(1,NI)=-XI*ETA0*ETA2                                          COM09510
       DSF(2,NI)=.5D0*YP*XI1*(1.D0+2.D0*ETA2)                           COM09520
       GOTO 910                                                         COM09530
 930   IF(I.GT.8)GOTO 940                                               COM09540
       SF(NI)=.5D0*ETA1*XI0*XI2                                         COM09550
       DSF(1,NI)=.5D0*XP*ETA1*(1.D0+2.D0*XI2)                           COM09560
       DSF(2,NI)=-ETA*XI0*XI2                                           COM09570
       GOTO 910                                                         COM09580
 940   SF(NI)=ETA1*XI1                                                  COM09590
       DSF(1,NI)=-2.D0*XI*ETA1                                          COM09600
       DSF(2,NI)=-ETA*XI1*2.D0                                          COM09610
 910   CONTINUE                                                         COM09620
 100  DO 560 I=1,2                                                      COM09630
       DO 560 J=1,2                                                     COM09640
        GJ(I,J)=0.D0                                                    COM09650
         DO 560 K=1,NPE                                                 COM09660
 560  GJ(I,J)=GJ(I,J)+DSF(I,K)*ELXY(K,J)                               COM09670
      DET=GJ(1,1)*GJ(2,2)-GJ(1,2)*GJ(2,1)                               COM09680
      GJINV(1,1)=GJ(2,2)/DET                                            COM09690
      GJINV(1,2)=-GJ(1,2)/DET                                           COM09700
      GJINV(2,1)=-GJ(2,1)/DET                                           COM09710
      GJINV(2,2)=GJ(1,1)/DET                                            COM09720
      DO 570 I=1,2                                                      COM09730
       DO 570 J=1,NPE                                                   COM09740
```

```
        GDSF(I,J)=0.D0                                                  COM09750
        DO 570 K=1,2                                                    COM09760
 570   GDSF(I,J)=GDSF(I,J)+GJINV(I,K)*DSF(K,J)                          COM09770
      RETURN                                                            COM09780
      END                                                               COM09790
      SUBROUTINE BNDY(NRMAX,NCMAX,NEQ,NHBW,S,SL,NBDY,IBDY,VBDY)         COM09800
C                                                                       COM09810
C     ..............................................................   COM09820
C     THIS PROGRAM IMPOSES THE PRESCRIBED BOUNDARY CONDITIONS ON THE    COM09830
C     BANDED SYMMETRIC MATRIX AND MODIFIES THE RIGHT-HAND-SIDE (SL).    COM09840
C     S IS THE COEFFICIENT MATRIX (STIFFNESS MATRIX)                    COM09850
C     SL IS THE RIGHT-HAND-SIDE COLUMN (FORCE) VECTOR                   COM09860
C     ..............................................................   COM09870
C                                                                       COM09880
      IMPLICIT REAL*8(A-H,O-Z)                                          COM09890
      DIMENSION S(NRMAX,NCMAX),SL(NRMAX),IBDY(NBDY),VBDY(NBDY)          COM09900
      COMMON/IO/IN,ITT                                                  COM09910
C     WRITE(7,980)S(1,1),S(1,2),S(1,3),S(1,4)                           COM09920
C     WRITE(7,980)S(2,1),S(2,2),S(2,3),S(2,4)                           COM09930
C     WRITE(7,980)S(3,1),S(3,2),S(3,3),S(3,4)                           COM09940
C     WRITE(7,980)S(4,1),S(4,2),S(4,3),S(4,4)                           COM09950
C     WRITE(7,980)S(5,1),S(5,2),S(5,3),S(5,4)                           COM09960
C     WRITE(7,980)S(6,1),S(6,2),S(6,3),S(6,4)                           COM09970
C     WRITE(7,980)S(7,1),S(7,2),S(7,3),S(7,4)                           COM09980
C980  FORMAT(' ',4(D13.6,2X))                                           COM09990
      DO 30 NB=1,NBDY                                                   COM10000
      IE=IBDY(NB)                                                       COM10010
      SVAL=VBDY(NB)                                                     COM10020
      IT=NHBW-1                                                         COM10030
      I=IE-NHBW                                                         COM10040
      DO 10 II=1,IT                                                     COM10050
      I=I+1                                                             COM10060
      IF (I.LT.1) GO TO 10                                              COM10070
      J=IE-I+1                                                          COM10080
      SL(I)=SL(I)-S(I,J)*SVAL                                           COM10090
      S(I,J)=0.0                                                        COM10100
   10 CONTINUE                                                          COM10110
      S(IE,1)=1.0                                                       COM10120
      SL(IE)=SVAL                                                       COM10130
      I=IE                                                              COM10140
      DO 20 II=2,NHBW                                                   COM10150
      I=I+1                                                             COM10160
      IF (I.GT.NEQ) GO TO 20                                            COM10170
      SL(I)=SL(I)-S(IE,II)*SVAL                                         COM10180
      S(IE,II)=0.0                                                      COM10190
   20 CONTINUE                                                          COM10200
   30 CONTINUE                                                          COM10210
      RETURN                                                            COM10220
      END                                                               COM10230
      SUBROUTINE SOLVE (NRM,NCM,NEQNS,NBW,BAND,RHS,IRES)                COM10240
C                                                                       COM10250
C     ..............................................................   COM10260
C     THIS PROGRAM SOLVES A BANDED SYMMETRIC SYSTEM OF EQUATIONS.       COM10270
C     THE BANDED MATRIX IS INPUT THROUGH BAND(NEQNS,NBW), AND           COM10280
C     RHS IS THE RIGHT HAND SIDE (FORCE VECTOR) OF THE EQUATION.        COM10290
C     NEQNS IS THE NO. OF EQUATIONS AND NBW IS THE HALF BAND WIDTH.     COM10300
C     IN RESOLVING, IRES .GT. 0, LHS ELIMINATION IS SKIPPED.            COM10310
C     ..............................................................   COM10320
C                                                                       COM10330
      IMPLICIT REAL*8(A-H,O-Z)                                          COM10340
      DIMENSION BAND(NRM,NCM),RHS(NRM)                                  COM10350
      COMMON/IO/IN,ITT                                                  COM10360
      MEQNS=NEQNS-1                                                     COM10370
      IF (IRES.GT.0) GO TO 40                                           COM10380
      DO 30 NPIV=1,MEQNS                                                COM10390
      NPIVOT=NPIV+1                                                     COM10400
      LSTSUB=NPIV+NBW-1                                                 COM10410
      IF (LSTSUB.GT.NEQNS) LSTSUB=NEQNS                                 COM10420
      DO 20 NROW=NPIVOT,LSTSUB                                          COM10430
C     INVERT ROWS AND COLUMNS FOR ROW FACTOR                            COM10440
      NCOL=NROW-NPIV+1                                                  COM10450
```

```
      FACTOR=BAND(NPIV,NCOL)/BAND(NPIV,1)                               COM10460
      DO 10 NCOL=NROW,LSTSUB                                            COM10470
      ICOL=NCOL-NROW+1                                                  COM10480
      JCOL=NCOL-NPIV+1                                                  COM10490
   10 BAND(NROW,ICOL)=BAND(NROW,ICOL)-FACTOR*BAND(NPIV,JCOL)            COM10500
   20 RHS(NROW)=RHS(NROW)-FACTOR*RHS(NPIV)                              COM10510
   30 CONTINUE                                                          COM10520
      GO TO 70                                                          COM10530
   40 DO 60 NPIV=1,MEQNS                                                COM10540
      NPIVOT=NPIV+1                                                     COM10550
      LSTSUB=NPIV+NBW-1                                                 COM10560
      IF (LSTSUB.GT.NEQNS) LSTSUB=NEQNS                                 COM10570
      DO 50 NROW=NPIVOT,LSTSUB                                          COM10580
      NCOL=NROW-NPIV+1                                                  COM10590
      FACTOR=BAND(NPIV,NCOL)/BAND(NPIV,1)                               COM10600
   50 RHS(NROW)=RHS(NROW)-FACTOR*RHS(NPIV)                              COM10610
   60 CONTINUE                                                          COM10620
C     BACK SUBSTITUTION                                                 COM10630
   70 DO 90 IJK=2,NEQNS                                                 COM10640
      NPIV=NEQNS-IJK+2                                                  COM10650
      RHS(NPIV)=RHS(NPIV)/BAND(NPIV,1)                                  COM10660
      LSTSUB=NPIV-NBW+1                                                 COM10670
      IF (LSTSUB.LT.1) LSTSUB=1                                         COM10680
      NPIVOT=NPIV-1                                                     COM10690
      DO 80 JKI=LSTSUB,NPIVOT                                           COM10700
      NROW=NPIVOT-JKI+LSTSUB                                            COM10710
      NCOL=NPIV-NROW+1                                                  COM10720
      FACTOR=BAND(NROW,NCOL)                                            COM10730
   80 RHS(NROW)=RHS(NROW)-FACTOR*RHS(NPIV)                              COM10740
   90 CONTINUE                                                          COM10750
      RHS(1)=RHS(1)/BAND(1,1)                                           COM10760
      RETURN                                                            COM10770
      END                                                               COM10780
      SUBROUTINE MESH(IELEM,NX,NY,NPE,X,Y,NNM,NEM,DX,DY)                COM10790
      IMPLICIT REAL*8(A-H,O-Z)                                          COM10800
      COMMON/MSH/NOD(4,9)                                               COM10810
      DIMENSION X(9),Y(9),DX(5),DY(5)                                   COM10820
      IEL=IELEM-1                                                       COM10830
C     QUADRILATERAL ELEMENTS                                            COM10840
      NEX1=NX+1                                                         COM10850
      NEY1=NY+1                                                         COM10860
      NXX=NX*IEL                                                        COM10870
      NYY=NY*IEL                                                        COM10880
      NXX1=NXX+1                                                        COM10890
      NYY1=NYY+1                                                        COM10900
      NEM=NX*NY                                                         COM10910
      NNM=NXX1*NYY1-(IEL-1)*NX*NY                                       COM10920
      IF(NPE.EQ.9)NNM=NXX1*NYY1                                         COM10930
      K0=0                                                              COM10940
      IF(NPE.EQ.9)K0=1                                                  COM10950
      NOD(1,1)=1                                                        COM10960
      NOD(1,2)=IEL+1                                                    COM10970
      NOD(1,3)=NXX1+(IEL-1)*NEX1+IEL+1                                  COM10980
      IF(NPE.EQ.9)NOD(1,3)=4*NX+5                                       COM10990
      NOD(1,4)=NOD(1,3)-IEL                                             COM11000
      IF(NPE.EQ.4)GOTO 200                                              COM11010
      NOD(1,5)=2                                                        COM11020
      NOD(1,6)=NXX1+(NPE-6)                                             COM11030
      NOD(1,7)=NOD(1,3)-1                                               COM11040
      NOD(1,8)=NXX1+1                                                   COM11050
      IF(NPE.EQ.9)NOD(1,9)=NXX1+2                                       COM11060
  200 IF(NY.EQ.1)GOTO 230                                               COM11070
      M=1                                                               COM11080
      DO 220 N=2,NY                                                     COM11090
      L=(N-1)*NX+1                                                      COM11100
      DO 210 I=1,NPE                                                    COM11110
  210 NOD(L,I)=NOD(M,I)+NXX1+(IEL-1)*NEX1+K0*NX                         COM11120
  220 M=L                                                               COM11130
  230 IF(NX.EQ.1)GOTO 270                                               COM11140
      DO 260 NI=2,NX                                                    COM11150
      DO 240 I=1,NPE                                                    COM11160
```

```
      K1=IEL                                                            COM11170
      IF(I.EQ.6.OR.I.EQ.8)K1=1+K0                                       COM11180
  240 NOD(NI,I)=NOD(NI-1,I)+K1                                          COM11190
      M=NI                                                              COM11200
      DO 260 NJ=2,NY                                                    COM11210
      L=(NJ-1)*NX+NI                                                    COM11220
      DO 250 J=1,NPE                                                    COM11230
250   NOD(L,J)=NOD(M,J)+NXX1+(IEL-1)*NEX1+K0*NX                         COM11240
260   M=L                                                               COM11250
270   YC=0.D0                                                           COM11260
      IF(NPE.EQ.9)GOTO 310                                              COM11270
      DO 300 NI=1,NEY1                                                  COM11280
      I=(NXX1+(IEL-1)*NEX1)*(NI-1)+1                                    COM11290
      J=(NI-1)*IEL+1                                                    COM11300
      X(I)=0.D0                                                         COM11310
      Y(I)=YC                                                           COM11320
      DO 280 NJ=1,NXX                                                   COM11330
      I=I+1                                                             COM11340
      X(I)=X(I-1)+DX(NJ)                                                COM11350
280   Y(I)=YC                                                           COM11360
      IF(NI.GT.NY.OR.IEL.EQ.1)GOTO 300                                  COM11370
      J=J+1                                                             COM11380
      YC=YC+DY(J-1)                                                     COM11390
      I=I+1                                                             COM11400
      X(I)=0.D0                                                         COM11410
      Y(I)=YC                                                           COM11420
      DO 290 II=1,NX                                                    COM11430
       K=2*II-1                                                         COM11440
       I=I+1                                                            COM11450
       X(I)=X(I-1)+DX(K)+DX(K+1)                                        COM11460
290   Y(I)=YC                                                           COM11470
300   YC=YC+DY(J)                                                       COM11480
      RETURN                                                            COM11490
310   DO 330 NI=1,NYY1                                                  COM11500
      I=NXX1*(NI-1)                                                     COM11510
      XC=0.D0                                                           COM11520
      DO 320 NJ=1,NXX1                                                  COM11530
      I=I+1                                                             COM11540
      X(I)=XC                                                           COM11550
      Y(I)=YC                                                           COM11560
320   XC=XC+DX(NJ)                                                      COM11570
330   YC=YC+DY(NI)                                                      COM11580
      RETURN                                                            COM11590
      END                                                               COM11600
```

Vita

Thomas Harris Fronk was born February 17, 1961 in Tremonton, Utah, the fifth of six children. He was educated in Tremonton until his graduation from Bear River High School in June 1979. He served a lay mission in South America for the Church of Jesus Christ of Latter-Day Saints from 1980 to 1982. He received his B.S. degree in mechanical engineering from Utah State University in June 1985 while working for Lockheed Missile and Space Co. his senior year. From June 1985 to September 1986 he was employed in the composite structures design group at Morton Thiokol Inc.. He began his graduate studies at Virginia Polytechnic and State University in September 1986. He married Monica Layne Smith in June 1984 and they are the parents of two boys ages four months and two and one-half years.