ANALYSIS OF POWER SYSTEM DISTURBANCES DUE TO RELAY HIDDEN FAILURES

by

Surachet Tamronglak

Dissertation submitted to the Faculty of the
Virginia Polytechnic Institute and State University
in partial fulfillment of the requirements for the degree of

Doctor of Philosophy

in

Electrical Engineering

APPROVED:

Arun G. Phadke, Chairman

Lee W. Johnson

Robert P. Broadwater

Jaime De La Ree Lopez

Yilu Liu

March, 1994

Blacksburg, Virginia

Analysis of Power System Disturbances due to Relay Hidden Failures

by

Surachet Tamronglak

Arun G. Phadke, Chairman

The Bradley Department of Electrical Engineering

(ABSTRACT)

This research analyzes the linkage between power system disturbances and failures in relaying systems. The annual disturbance reports prepared by the North American Electric Reliability Council were examined. It has been found that relaying system failures play a very important role in power system cascading outages. The type of relaying system failures that are the most troublesome are the ones that have a potential to remain hidden until being exposed by some abnormal power system states to trigger relay misoperations.

Each commonly used relaying scheme in transmission system is examined for any hidden failures that can lead to relay misoperations and multiple power system contingencies. Each hidden failure mode has a region, called region of vulnerability. Inside this region, some abnormal power system states can expose the hidden failure. The reach of the region depends largely on the settings of the relay in question.

A method of computing the relative importance of each region of vulnerability, called vulnerability index, was proposed. The calculation of the

index can be based on some measurements of power system performances. In this research, the stability measurements of the system following some contingencies that may occur in the region are chosen. With this approach, vulnerable relays can be identified.

A preventive method was proposed so that the number of relay misoperations due to hidden failures and, ultimately, the number of power system disturbances can be reduced.

Acknowledgments

I wish to express my sincere gratitude to my advisor, Dr. A.G. Phadke, for his guidance and support. I am greatly thankful to Dr. L.W. Johnson, Dr. R.P. Broadwater, Dr. J. De La Ree Lopez and Dr. Y. Liu for serving on my graduate committee. Appreciation is also extended to my parents, brothers, sisters and Amporn Wangkajornwuttisak for their wonderful support and encouragement.

Table of Contents

List of Figures

List of Tables

Chapter 1. Introduction

Power systems are subject to disturbances all the time ranging from small to large disturbances. Most of the time, however, the disturbances are small, such as small and normal load changes. Control elements spread throughout the systems usually are equipped to handle these situations and bring the systems back to normal. The power systems are, therefore, operated most of the time in a normal state supplying quality and uninterrupted power to customers. At times, however, large disturbances, such as loss of key transmission lines or generating plants occur, leading to power system blackouts or brownouts in which a large number of customers are left without power. These rare and unfortunate events have negative or even catastrophic impacts on society. The complete prevention of the power system disturbances is almost, nevertheless, impossible. Any new practices, techniques or devices that have a potential to reduce the possibility of the occurrence of the disturbances clearly warrant investigation.

In a recent study of power system disturbances, protection or relaying systems have been found to be a major factor in events leading to power system blackouts or major power system disturbances encompassing large areas. Failures or misoperations in various protection systems turn out to be the most significant factor in the overall process of reported large-scale disturbances. Of all the protection system failures, the ones that remain dormant or hidden until some unusual system events occur are the most important, since failures that cause an immediate misoperation during normal power system states can be detected and corrected right away and should not be a major factor causing major power system disturbances.

The abnormal power system states that can expose the hidden failures are usually faults, heavy load, shortages in reactive power, etc. When the hidden failures are exposed, they can trigger relay misoperations which can worsen the situation since the power systems may already be operated in an emergency state when those abnormal states occur, eventually leading to major power system disturbances. A better understanding of the hidden failures is required to prevent or at least reduce the likelihood of the occurrence of the large-scale disturbances due to the hidden failures.

In Chapter two, annual power system disturbance reports prepared by the North American Electric Reliability Council are examined for relay failures that caused or contributed to power system outages. It has been found that relay failures involved in about 70% of the reported disturbances. This view has been strengthened by the responses to our questionnaire sent to relay and power system

engineers working for utilities in the U.S. and other countries. To cope with the problems of relaying system failures, it is required that the mechanisms of the failures be understood. This, in turn, requires an examination of relaying systems. Commonly used transmission relaying systems are, therefore, studied to identify any possible inherent hidden failures and their consequences on the power systems. The consequences of the relaying system failures, usually, depends on the settings of the relays with the failures. To study their effects, protection systems with complete settings are postulated on to a sample power system. The chosen sample power system is the widely used New England 39-bus system. The protection system designs are performed in Chapter Three.

In Chapter four, a concept of region of vulnerability associated with each mode of hidden failure is proposed. It is the region in which the hidden failure can cause a relay to incorrectly trip its associated circuit breaker. The reach of the vulnerability region is dependent mostly upon the setting of the relay. Two vulnerability regions with an equal reach may not, however, be on a par with each other in terms of the effects on the power system since one region may encompass more critical lines than the other does. A computational method of the relative importance of each region of vulnerability, called vulnerability index, is proposed in this chapter. The index may tie to any power system performance measurements. In this research, the stability of the power system following possible contingencies inside the vulnerability region is chosen. Both steady-state and transient stability issues are examined.

A larger value of the vulnerability index should indicate that the relay, in which if that hidden failure mode exists, is relatively more important and can cause more serious power system disturbances or has a higher possibility to cause the disturbances than the one with a smaller index. Therefore, more attention should be paid to those key relays to prevent the hidden failures and their consequences. A scheme of digital monitoring and control system is proposed for that task.

Chapter 2. Relaying System Vulnerability

2.1 Introduction

Most of power system disturbances can be linked to failures in relaying systems. The involvement relays does not necessarily mean that they initiated the events. Instead, they play a very major role in contributing to the disturbances to become major since relays are most vulnerable when the power system is operated under stressful conditions, such as heavy loads and emergencies. In these situations, the condition of the power system can be worsen very rapidly causing a large-scaled power system disturbance, such as the massive Northeast power system blackout on November 9, 1965 [1]. The socioeconomic impact of this failure was undoubtedly tremendous. Approximately, 30 million people were left

without power. Economic losses as high as $100 million in 1965 dollar value were estimated.

Since that disturbance, the reliability of power systems has improved a great deal; yet, some significant disturbances causing widespread power outages still have been reported which can be seen in the annual disturbance reports prepared by the North American Electric Reliability Council (NERC) [2] for the disturbances in the U.S. and Canada. CIGRE conducted surveys of major power system disturbances experienced by mostly European utilities. In this chapter the NERC reports over the period of 1984 to 1991 are examined for the involvement of relays in power system disturbances. In addition, a questionnaire was sent to practicing engineers requesting their assistance in analyzing outages occurring in their utilities.

Many strategies that have been developed to improve the reliability of power networks involve remedial actions such as controlled separation and load shedding to avoid total system collapse. They, however, still involve some power interruptions to some customers. A better avenue is to prevent or stop the cascading of power system outages. An excellent starting point is relaying systems since they are involved in most of the major outages. In this chapter, most commonly used relaying systems in transmission networks are examined for any possible inherent hidden failures and the consequences of the failures on relay operations.

2.2 Analysis of Power System Disturbance Reports

Each year the North American Electric Reliability Council (NERC) prepares a report of major power system disruptions or emergencies experienced by utilities who are required to report the incidents to the U.S. Department of Energy (DOE) according to its requirements [2]. The reporting requirements include loss of load of over 300 MW for more than 15 minutes for utilities with a previous year recorded peak load of more than 3,000 MW, loss of load of 200 MW or 50% of the total customers for smaller utilities, load shedding of over 100 MW of firm customer load to maintain the system continuity, continuous interruption for more than 3 hours to 50,000 customers or more than 50% of the system load, voltage reductions of greater than three percent and public appeals to reduce electric consumption.

The disturbance reports over the period of 1984 to 1991 are analyzed and summarized in this research. The total numbers of reported disturbances, MW losses and customers affected in each of those years are shown in Figures 2.1 and 2.3, respectively. In some disturbances the MW loss and the number of affected customers were not reported and, therefore, are not included in the figures. The reports would have been more meaningful had the duration of each disturbances been included. Nevertheless, the three figures should give the overall picture of annual power system disturbances and thereof severity. From the figures, it can be seen that there is no trend in the annual occurrence of power system disturbances and their severity. The random nature is expected since most disturbances were

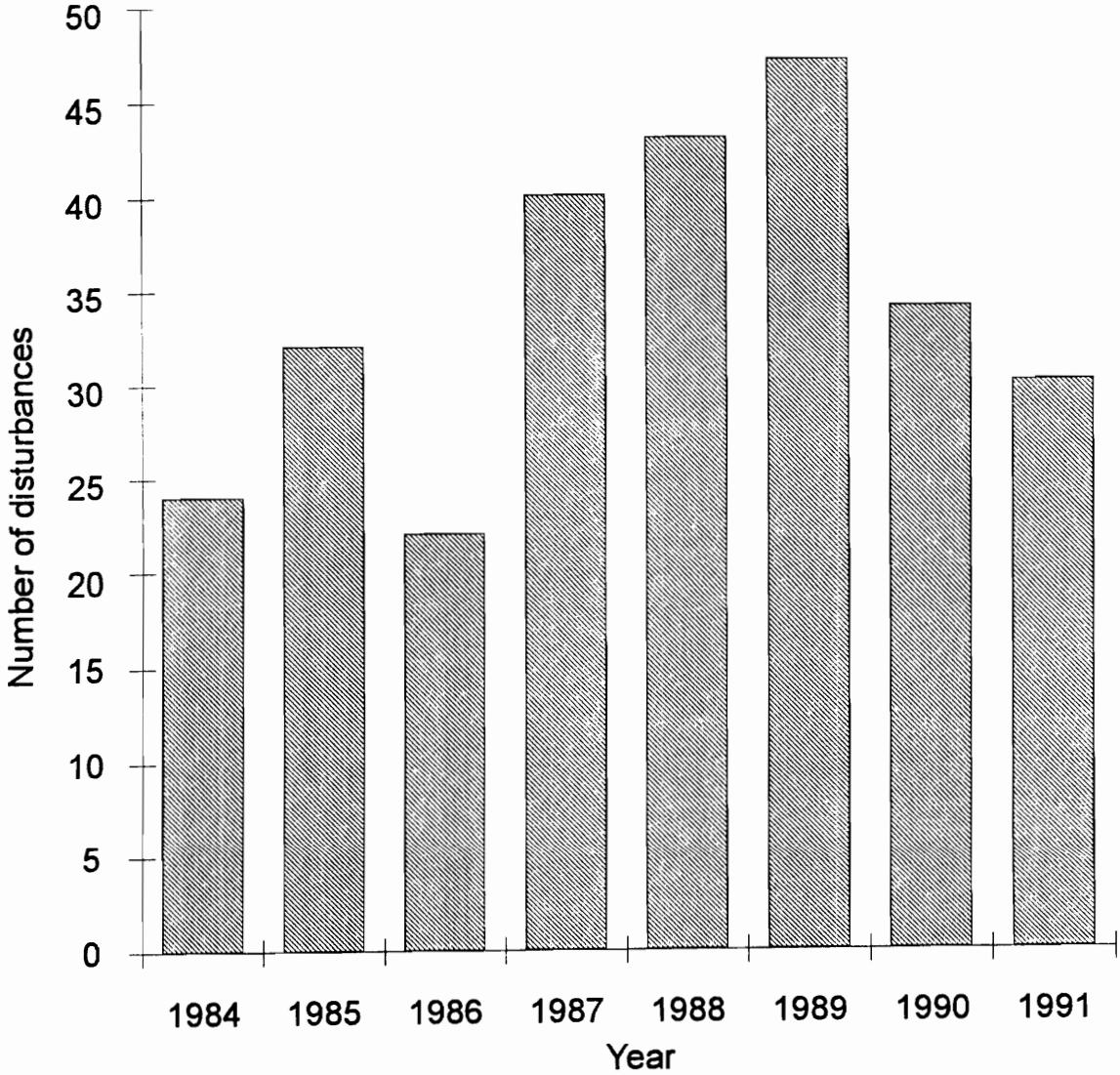

Figure 2.1 Annual number of reported disturbances from 1984 to 1991

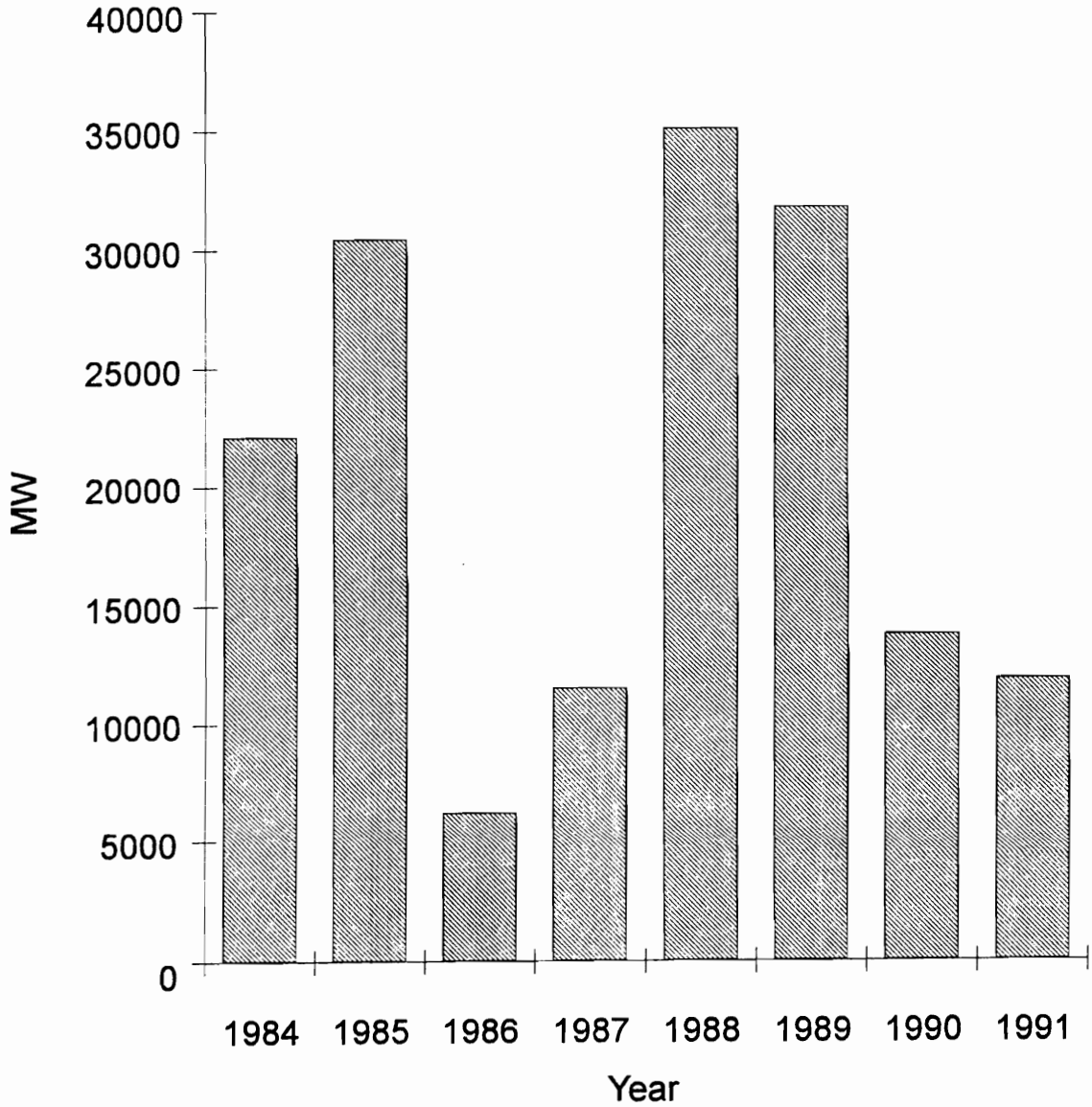

Figure 2.2 Annual interrupted MW from 1984 to 1991

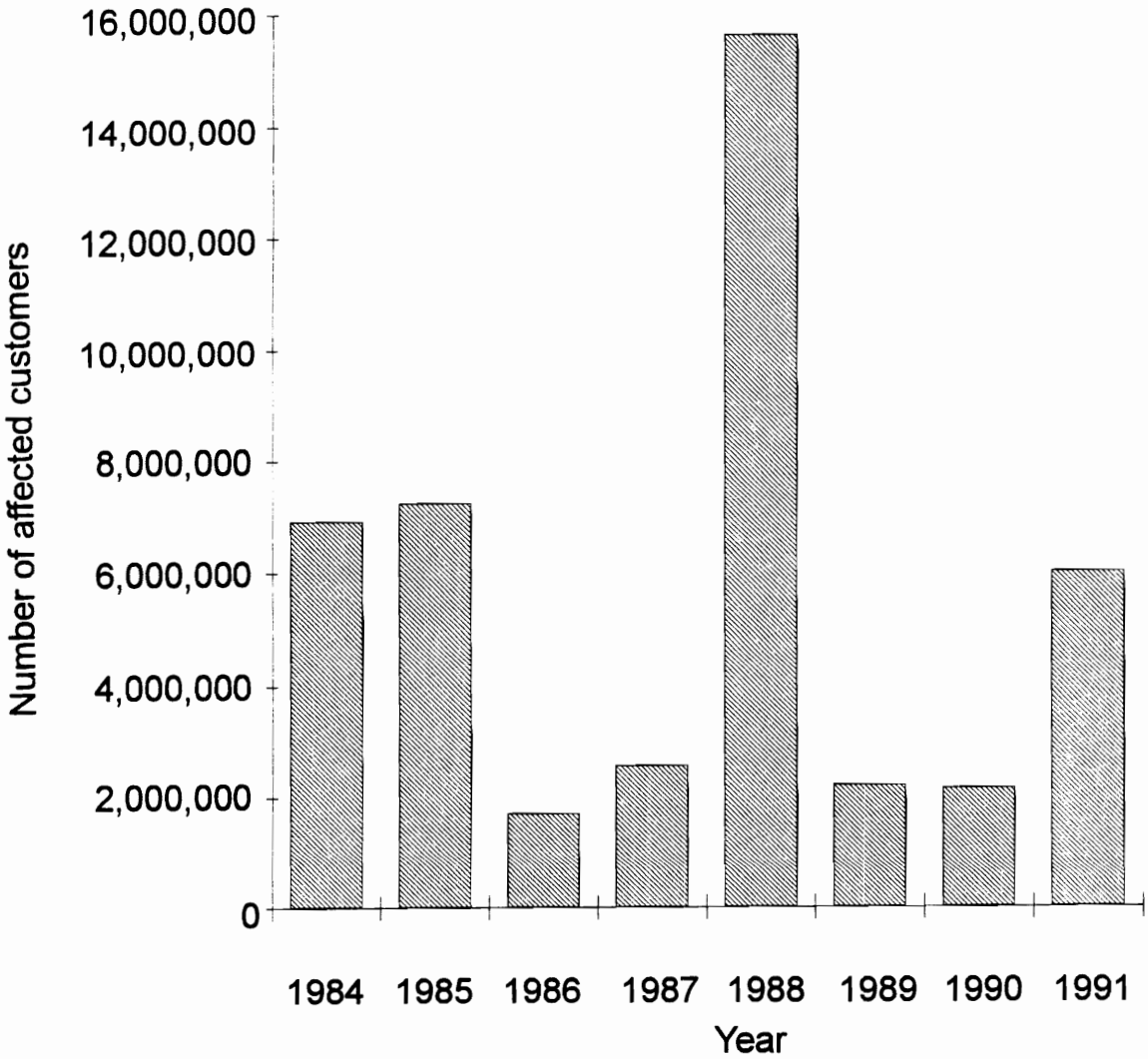

Figure 2.3 Annual number of customers affected by power system disturbances from 1984 to 1991

initiated by natural events, failures of equipment and human errors, all of which are random events.

The annual report, however, does not give details of all the reported disturbances. Approximately ten cases are detailed each year. These detailed cases are studied in this research. The initial cause of each disturbance is determined. Most disturbances started small but had at least one contributing factor causing them to become major. These contributing causes are also identified.

Most cases were initiated by some natural events. Failures of equipment, other than relaying systems, initiated about one third of the cases. Human errors were the initial cause of nine percent of the cases. Relaying or protection system failures and problems initiated only a few percent of the cases. They were, however, the contributing factor in almost 70% of the cases as seen in Table 2.1. As noted in NERC reports, the relaying system problems usually involve defective relay components, relays improperly applied, and improperly tuned power line carrier circuits. These relay problems are a critical factor in the reliability and control of transmission systems, especially during heavy loading periods.

Relaying system failures that cause immediate power system disturbances generally are not critical since the failures can be corrected right away and the disturbances are usually small. The most critical failures or defects in protection systems are those that go undetected for a long period of time until they are exposed to trigger relay misoperations. The triggering mechanisms can be some

Table 2.1 Percentage of power system disturbances with relaying system involvement from 1984 to 1991 in NERC disturbance reports.

Year	Total number of disturbances studied	Number of disturbances with relaying systems involvement	Percentage
1984	14	10	71.4
1985	12	11	91.7
1986	7	5	71.4
1987	5	3	60.0
1988	12	8	66.7
1989	10	7	70.0
1990	12	7	58.3
1991	12	8	66.7
Total	84	59	70.2

line outages and switching, loss of generation, reverse power flows, heavy loads, etc. Moreover, the failures are often exposed during power system emergencies. This can significantly worsen the overall situations and degrade system integrity resulting in loss of stability and loads. Therefore, the hidden failures in relaying systems are the most critical factors causing major power system disturbances. These hidden failures will be identified in this chapter

It should be noted that a failure that results in an immediate trip without any prior event is not considered a hidden failure. The power system must be planned and operated to withstand the loss of any single circuit element without exceeding the NERC criteria for reporting a disturbance. A hardware failure that results in the relays failing to operate a circuit breaker and trip out a faulted line or device is also not considered a hidden failure since redundant or backup protection or breaker failure systems must normally be provided for such a contingency. Furthermore, a defect or malfunction that occurs at the instant of a fault or switching event, e.g. a hole in the blocking signal or an insulation caused by a switching surge, was similarly not considered a hidden failure since such a failure is not a permanent condition and cannot be detected in advance. In this research, the concept or definition of relay or relaying system hidden failures is as follows: *A hidden failure is defined to be a permanent defect that will cause a relay or a relay system to incorrectly and inappropriately remove a circuit element(s) as a direct consequence of another switching event.*

2.3 Industry Survey

The questionnaire shown in the Appendix was sent to relay and power system engineers working for utilities in the U.S. and some foreign countries. In the questionnaire, we asked them to analyze large-scale power system disturbances experienced by their utilities that initiated or exacerbated by improper relay operations. Twenty-three specific responses to the questionnaire and a few letters addressing the subject but without answering the questionnaire itself and reports on the outages from several European countries were received.

The questionnaire requested the engineers to broadly classify the relay performance into three categories:

1. Incorrect but appropriate.
2. Incorrect and inappropriate
3. Correct but inappropriate.

In the first category, a relay or relaying system did not respond as it was intended to, but fortunately the action was appropriated to minimize the consequences of the event. Obviously, we cannot expect any reliable performance from this type of relay operation. There were two responses in this category. In the second category, the relay or relaying system misoperated and the action was harmful to the system. Eighteen respondents placed the disturbances in this category. In the last category, the relay operated properly according to the information received but the action was harmful to the system. This might be due

to incorrect settings or settings are not appropriate for the prevalent system conditions. Four responses were received under this category.

The above responses were not as meaningful as earlier expected since the disturbances involved many relaying systems and circuit breaker operations and the engineers did not attempt to categorize each of them. For instance, in almost every case there were many operations that could fall into more than one category. Nevertheless, they underlie the fact in the previous section that most major power system disturbances are caused by relay or relay system failures whether they are the initiating cause or the contributing factor cascading the outage. Furthermore, the failures are not exposed until some abnormal power system events occur. In other words, hidden failures in relays caused most of the large-scale power system disturbances. Advantage/Gain from the research that identify and prevent any hidden failures from acting is tremendous.

2.4 Analysis of Relay Hidden Failures

A relaying system may consist of many components and accessories such as, current and potential transformers, resistors, capacitors, coils, contacts, communication equipment, electronics cards, battery, etc. Each of these components may fail in its own way depending on its nature and characteristics, rendering relay misoperations. For example, the secondary winding inside a current transformer can be short-circuited resulting in no current to the relay. If

the current is used the polarizing source of a directional overcurrent relay, the relay will lose its dir tionality and may trip for a backward fault.

Furthermore, a particular failure of a component occurs in two different relaying schemes may have different effects on the power system. Subsequently, each component should be considered as part of a complete relaying system and the emphasis should be on the analysis of the relaying system as a whole so that the effects on the power system due to the hidden failures of two different relaying schemes can be easily compared. Relaying schemes commonly used in transmission systems are studied to identify their possible inherent hidden failure modes.

2.4.1 Directional comparison blocking relay

The elements and logic schematic diagram of this relay at bus A is shown in Figure 2.4, together with one-line diagram of its protective zone when applied to protect line AB. During an external fault, such as F_A , FD_A must operate to send a blocking signal to the remote terminal so that the trip unit at that terminal, D_B, will not operate. During an internal fault, such as F_{AB} , the trip unit, D_A , operates and no blocking signal from the remote terminal is received by R_A , since the signal is stopped by D_B ; the line is tripped.

The potential hidden failures of this type of relay at each terminal may exist if its blocking signal in the event of an external fault cannot be received by the remote terminal. This can happen if a) the fault detector is inoperative; b) the trip

unit is continuously picked up preventing the blocking signal from being transmitted; and c) the transmitter cannot transmit. In addition, if the blocking signal from the remote terminal cannot be received an incorrect trip will occur. This can happen should the receiver relay is defective. These hidden failures and their consequences on the protection system misoperations are listed in Table 2.2.

2.4.2 Directional comparison unblocking relay

Figure 2.5 shows the basic elements, logic schematic diagram and its one-line diagram of its protective zone of this relay. During normal power system states, a continuous blocking signal is transmitted from each terminal to the other over two separate communication channels. If the directional overreaching trip unit, D_A, detects a fault within its reach, it will shift the transmitted signal from a blocking frequency to an unblocking one. It results in a trip if the directional trip unit operates and an unblocking signal is received.

A hidden failure can exist if the directional trip unit continuously picks up and an external fault causes the remote terminal to shift from the blocking to unblocking signal. An incorrect trip can also occur if the receiver relay continuously operates and the terminal's trip unit picks up on an external fault. Table 2.3 shows these two hidden failure modes and the incorrect operations due to the failures.

2.4.3 Permissive overreaching transfer trip relay

The fundamental elements of logic diagram and the protective zone of this relay are shown in Figure 2.6. There are a variety of transfer trip schemes depending upon the application. All schemes, however, use a communication with a frequency shift. If the frequency of the received signal shifts from guard to trip state, a trip occurs. The overreaching directional unit, D_A, picks up and shifts the transmitter to the trip state when it detects a fault. If the fault is inside the zone of protection, R_A will also pick up since the remote terminal sends a signal in the trip state and the line is tripped.

Table 2.4 lists two possible hidden failure modes of this relay. One of the failure involves the overreaching directional unit that is continuously energized. The relay will mistakenly operate if an external fault is within the reach of the remote directional unit. The other hidden failure can exist if the receiver relay continuously picks up. The line is tripped when the directional unit sees a fault which could be an external one.

2.4.4 Permissive underreaching transfer trip relay

In this transfer trip relaying scheme, when an internal exists, a supervision is provided by the underreaching unit at the local terminal, D_A, while the one at the remote terminal, D_B, shifts the frequency of its transmitted signal to trip state causing R_A to pick up and a line trip. The two underreaching units must overlap each other. The logic schematic diagram and the protective zone one-line diagram of this scheme are shown in Figure 2.7.

Two potential hidden failures can exist when the underreaching unit is continuously picks up, and when the receiver unit is continuously energized. They are both listed in Table 2.5.

2.4.5 Second- and third-zone distance relays

Figure 2.8 depicts the schematic diagram and the protective zones of these distance relays. The fault detector units, Z_2 and Z_3, start separate timers. A trip occurs when the corresponding timer contacts close. A continuously closed relay contact will start the timer and allow it to time out, resulting in an immediate false trip. This is not a hidden failure. If, however, either one of the timer contacts or both fail closed, there will be a false trip when the corresponding fault detector unit is energized. This is a hidden failure and listed in Table 2.6.

2.4.6 Phase comparison blocking relay

The basic principles of both single and dual phase comparison relays are the same requiring synchronized signals to indicate an internal fault and out-of-phase signals to indicate an external fault. The low-level fault detector, FD_L, indicates the presence of a fault and keys on/off transmitter. The high-level fault detector, FD_H, arms the system for tripping. Figure 2.9 shows the schematic diagram and one-line diagram of this relaying scheme.

There are three possible hidden failure modes in this scheme. They are listed in Table 2.7 together with their consequences on relay operations.

2.4.7 Directional overcurrent ground relay

The schematic diagram of the polarizing circuit of this relay is shown in Figure 2.10. The relay uses the current magnitude for both pickup and time delay. A hidden failure can occur if the relay loses its directionality which is derived from either a current or a polarizing source. When this happens, the relay could trip for a backward fault.

2.4.8 Transformer differential relay

A transformer differential relay consists of operating and restraint coils as shown in Figure 2.11. The trip characteristics of the relay can be set as a percentage or ratio of the operating force and restraint force according to the used CT characteristics and ratios, as well as the characteristics of the transformer being protected. The restraint force may also come from harmonic filters to prevent an incorrect trip due to inrush current. A hidden failure can occur if the restraint torque is missing when the restraint coils are shorted. The relay could misoperate for normal loading conditions.

2.4.9 Bus differential relay

There are, normally, no hidden failures associated with this type of relay. All of the possible defects would result in either an immediate trip for a failure to trip.

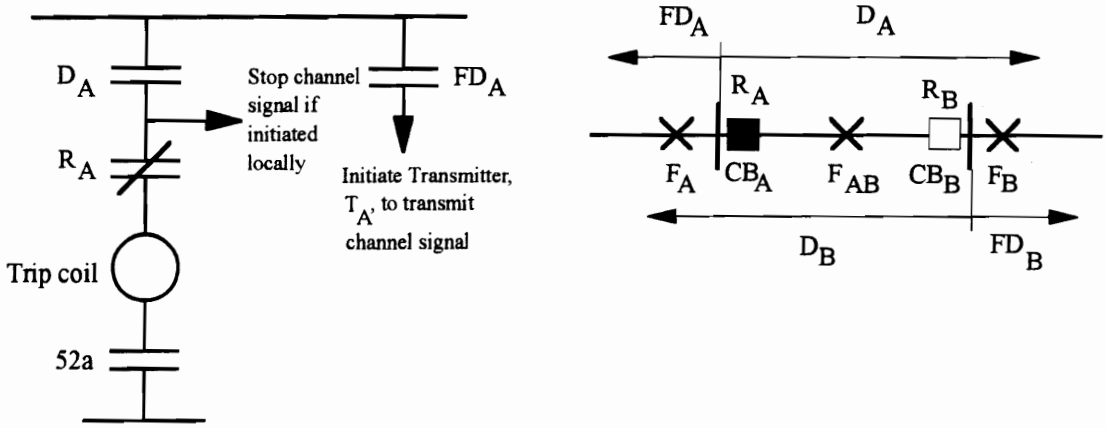

A. Logic schematic diagram

B. One-line diagram of protective zone

Note:

Element	Description	Function
FD	Fault detector (block unit)	Detects fault and starts transmitter
D	Directional relay (trip unit)	Stops transmitter
R	Receiver relay	Receives remote transmission
T	Transmitter	Transmits channel signal
CB	Circuit breaker	Disconnects the line
52a	Circuit breaker contacts	Trips circuit breaker
F_A	Fault behind bus A and within the reach of D_B	
F_B	Fault behind bus B and within the reach of D_A	
F_{AB}	Fault between buses A and B	

Figure 2.4 Directional comparison blocking relay.

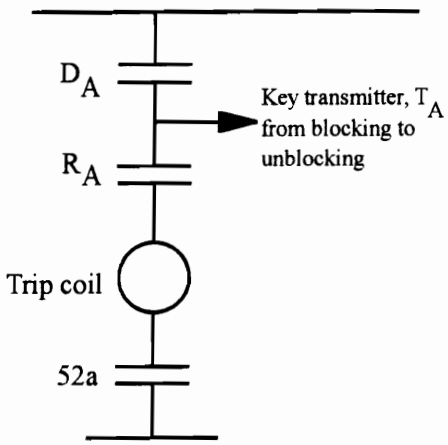

A. Logic schematic diagram

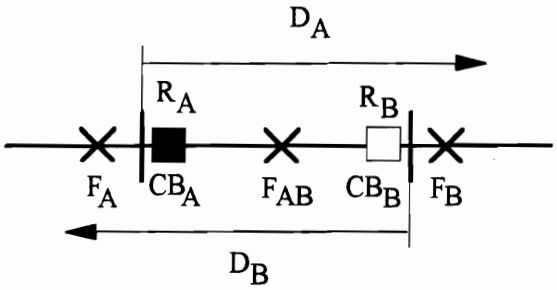

B. One-line diagram of protective zone

Note:

Element	Description	Function
D	Directional relay (trip unit)	Shifts transmitter to unblocking
R	Receiver relay	Receives remote transmission
T	Transmitter	Transmits channel signal
CB	Circuit breaker	Disconnects the line
52a	Circuit breaker contacts	Trips circuit breaker
F_A	Fault behind bus A and within the reach of D_B	
F_B	Fault behind bus B and within the reach of D_A	
F_{AB}	Fault between buses A and B	

Figure 2.5 Directional comparison unblocking relay.

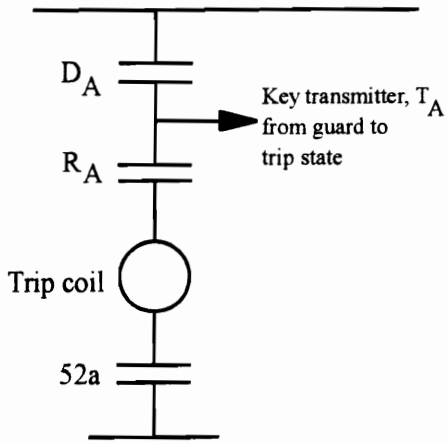

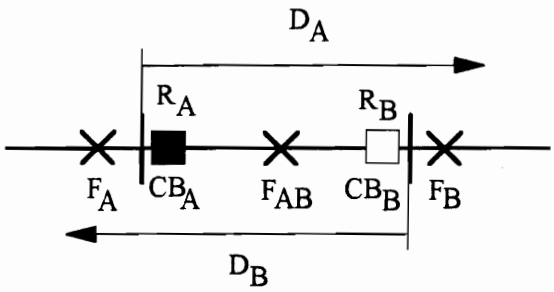

A. Logic schematic diagram

B. One-line diagram of protective zone

Note:

Element	Description	Function
D	Directional relay (trip unit)	Shifts transmitter to trip state
R	Receiver relay	Receives remote transmission
T	Transmitter	Transmits channel signal
CB	Circuit breaker	Disconnects the line
52a	Circuit breaker contacts	Trips circuit breaker
F_A	Fault behind bus A and within the reach of D_B	
F_B	Fault behind bus B and within the reach of D_A	
F_{AB}	Fault between buses A and B	

Figure 2.6 Permissive overreaching transfer trip relay.

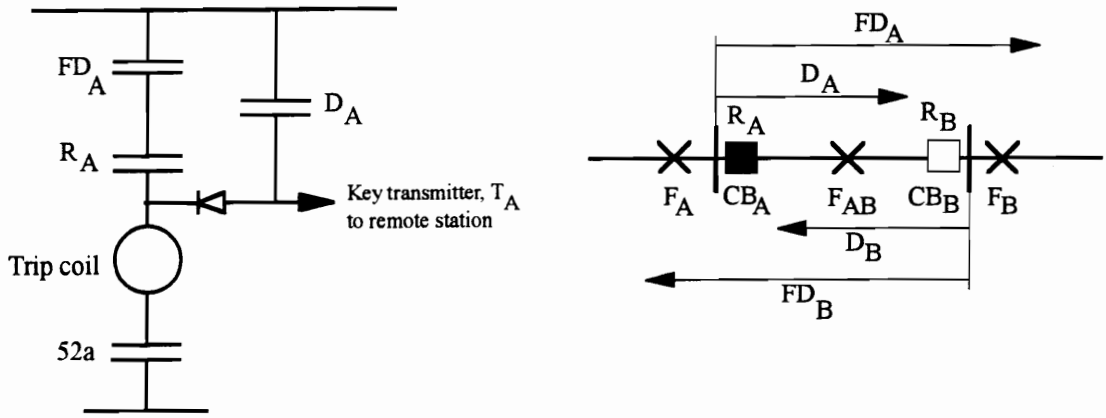

A. Logic schematic diagram

B. One-line diagram of protective zone

Note:

Element	Description	Function
FD	Fault detector (block unit)	Detects faults
D	Directional relay (trip unit)	Keys transmitter
R	Receiver relay	Receives remote transmission
T	Transmitter	Transmits channel signal
CB	Circuit breaker	Disconnects the line
52a	Circuit breaker contacts	Trips circuit breaker
F_A	Fault behind bus A and within the reach of D_B	
F_B	Fault behind bus B and within the reach of D_A	
F_{AB}	Fault between buses A and B	

Figure 2.7 Permissive underreaching transfer trip relay.

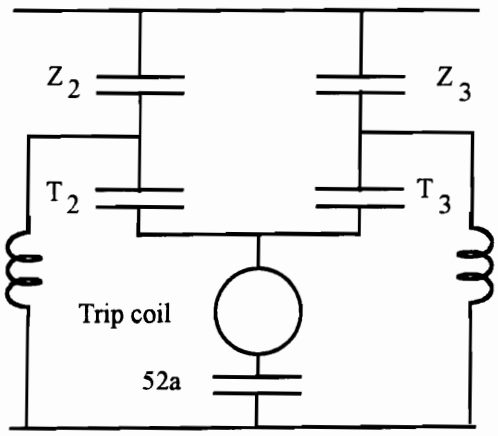

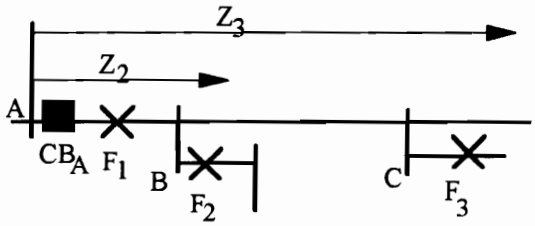

A. Logic schematic diagram

B. One-line diagram of protective zone

Note:

Element	Description	Function
Z_2	Fault detector for zone 2	Detects faults
Z_3	Fault detector for zone 3	Detects faults
T_2	Timer 2 contacts	Sets time delay for zone 2
T_3	Timer 3 contacts	Sets time delay for zone 3
CB	Circuit breaker	Disconnects the line
52a	Circuit breaker contacts	Trips circuit breaker
F_1	Fault between buses A and B	
F_2	Fault behind bus B and within the reach of Z_2	
F_3	Fault between the ends of Z_2 and Z_3	

Figure 2.8 Second- and third-zone distance relay.

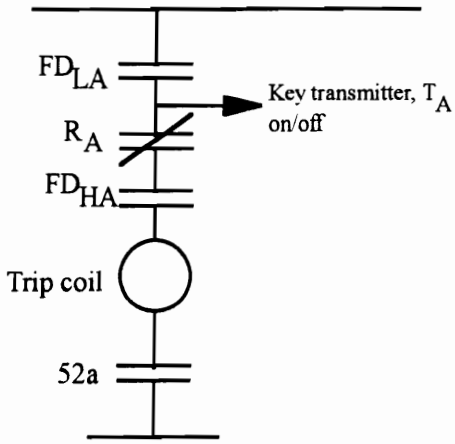

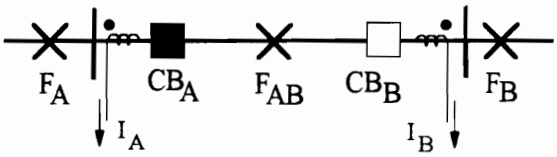

A. Logic schematic diagram

B. One-line diagram of protective zone

Note:

Element	Description	Function
FD_H	High-level fault detector	Arms the system for tripping
FD_L	Low-level fault detector	Keys on/off transmitter
R	Receiver relay	Receives remote transmission
T	Transmitter	Transmits channel signal
CB	Circuit breaker	Disconnects the line
52a	Circuit breaker contacts	Trips circuit breaker
F_A	Fault behind bus A; I_A and I_B are out of phase	
F_B	Fault behind bus B; I_A and I_B are out of phase	
F_{AB}	Fault between buses A and B; I_A and I_B are in phase	

Figure 2.9 Phase comparison blocking relay.

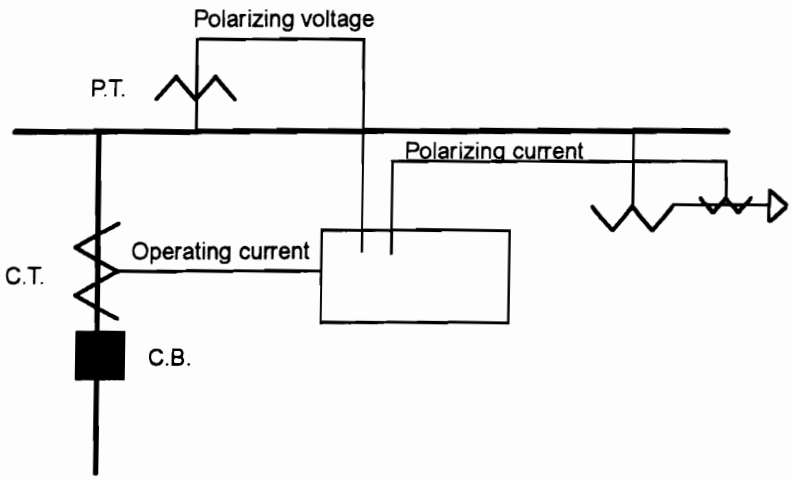

Schematic diagram of the polarizing circuit

Note:

Element	Description	Function
C.T.	Current transformer	Steps down current
P.T.	Potential transformer	Steps down voltage
CB	Circuit breaker	Disconnects the line

Figure 2.10 Directional overcurrent ground relay.

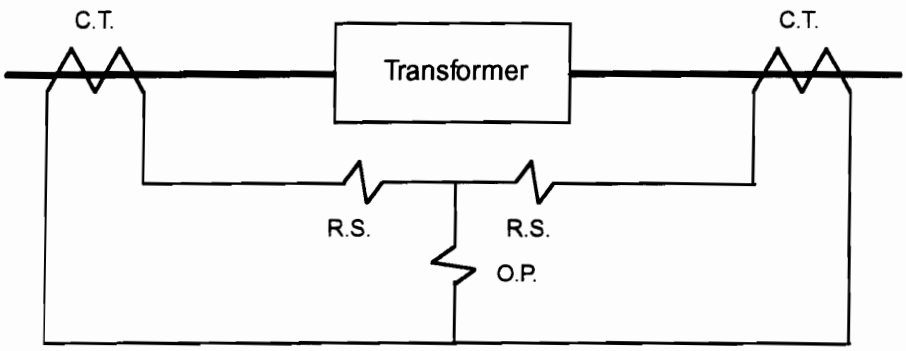

Schematic diagram

Note:

Element	Description	Function
C.T.	Current transformer	Steps down current
R.S.	Restraint coil	Supplies restraint force
O.P.	Operating coil	Supplies tripping force

Figure 2.11 Transformer differential relay.

Table 2.2 Hidden failure modes of directional comparison blocking relay

Hidden failure mode	Consequence
FD_A cannot pick up	CB_B trips for F_A
T_A fails to transmit	CB_B trips for F_A
R_A cannot pick up	CB_A trips for F_B

Table 2.3 Hidden failure modes of directional comparison unblocking relay

Hidden failure mode	Consequence
D_A continuously picks up	Both CB_s trip for F_A
R_A continuously picks up	CB_A trips for F_B

Table 2.4 Hidden failure modes of permissive overreaching transfer trip relay

Hidden failure mode	Consequence
D_A continuously picks up	Both CB trip for F_A
R_A continuously picks up	CB_A trips for F_B

Table 2.5 Hidden failure modes of permissive underreaching transfer trip relay

Hidden failure mode	Consequence
T_A continuously transmits	CB_B trips for F_A
R_A continuously picks up	CB_A trips for F_B

Table 2.6 Hidden failure modes of second- and third-zone distance relays

Hidden failure mode	Consequence
T_2 fails closed	CB_A trips for F_2 without time-delay
T_3 fails closed	CB_A trips for F_3 without time-delay

Table 2.7 Hidden failure modes of phase comparison blocking relay

Hidden failure mode	Consequence
Loss of signal	Both relays become nondirectional overcurrent with FD_H setting
FD_{LA} continuously picks up	Relay at bus A becomes nondirectional overcurrent
FD_{LA} cannot pick up	Relay at bus B becomes nondirectional overcurrent

Table 2.8 Hidden failure modes of directional overcurrent ground relay

Hidden failure mode	Consequence
Polarizing source or coil shorted	Trips for backward fault

Table 2.9 Hidden failure modes of transformer differential relay

Hidden failure mode	Consequence
Restraint coil shorted	Trips on heavy load current

Chapter 3. Design of Protection Systems

3.1 Introduction

After the potential hidden failures in common relaying schemes have been identified, their effects on a power system will be investigated. The effects of the hidden failures, usually, depend on the settings of relays in question; therefore, to investigate them we need to have a power system with its protection systems postulated. In this study, the New England 39-bus system that has been widely used by many researchers is chosen as our representative power system. It consists of ten generators and forty-six line segments. The system one-line diagram is shown on the next page. Its parameters are also attached. Although the philosophy in protection system design and practices for same relaying schemes may vary among utilities, the most common ones will be applied in this research.

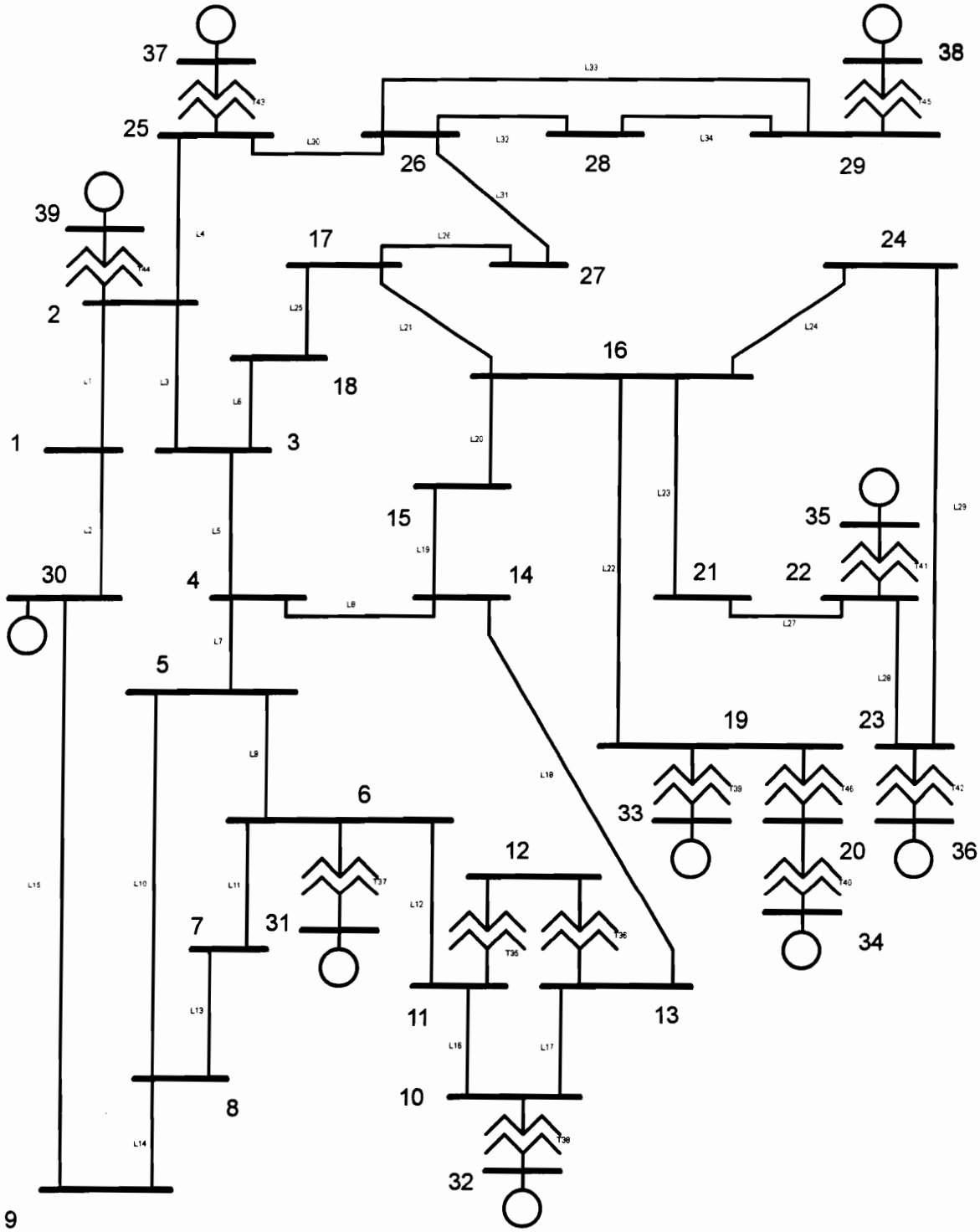

Figure 3.1 One-line diagram of the New England 39-bus sample power system

Bus data of the New England 39-bus sample power system

Bus	Type	V (per unit)	Generation (MW)	Load (MW)	Load (MVAR)
1	2	1	0	0	0
2	2	1	0	0	0
3	2	1	0	322	2.4
4	2	1	0	500	184
5	2	1	0	0	0
6	2	1	0	0	0
7	2	1	0	233.8	84
8	2	1	0	522	176
9	2	1	0	0	0
10	2	1	0	0	0
11	2	1	0	0	0
12	2	1	0	7.5	88
13	2	1	0	0	0
14	2	1	0	0	0
15	2	1	0	320	153
16	2	1	0	329	32.3
17	2	1	0	0	0
18	2	1	0	158	30
19	2	1	0	0	0
20	2	1	0	628	103
21	2	1	0	274	115
22	2	1	0	0	0
23	2	1	0	247.5	84.6
24	2	1	0	308.6	-92.2
25	2	1	0	224	47.2
26	2	1	0	139	17
27	2	1	0	281	75.5
28	2	1	0	206	27.6
29	2	1	0	283.5	26.9
30	3	1.03	1000	1104	250
31	1	0.982	0	9.2	4.6
32	3	0.983	650	0	0
33	3	0.997	632	0	0
34	3	1.012	508	0	0
35	3	1.049	650	0	0
36	3	1.063	560	0	0
37	3	1.028	540	0	0
38	3	1.026	830	0	0
39	3	1.048	250	0	0

Note: Type 1 = swing bus, Type 3 = generator bus, Type 2 = load bus

Line data of the New England 39-bus sample power system

Line	Bus	Bus	R (per unit)	X (per unit)	Y/2 (per unit)
1	1	2	0.0035	0.0411	0.34935
2	1	30	0.001	0.025	0.375
3	2	3	0.0013	0.0151	0.1286
4	2	25	0.007	0.0086	0.073
5	3	4	0.0013	0.0213	0.1107
6	3	18	0.0011	0.0133	0.1069
7	4	5	0.0008	0.0128	0.0671
8	4	14	0.0008	0.0129	0.0691
9	5	6	0.0002	0.0026	0.0217
10	5	8	0.0008	0.0112	0.0738
11	6	7	0.0006	0.0092	0.0565
12	6	11	0.0007	0.0082	0.06945
13	7	8	0.0004	0.0046	0.039
14	8	9	0.0023	0.0363	0.1902
15	9	30	0.0001	0.025	0.6
16	10	11	0.0004	0.0043	0.03645
17	10	13	0.0004	0.0043	0.03645
18	13	14	0.0009	0.0101	0.08615
19	14	15	0.0018	0.0217	0.183
20	15	16	0.0009	0.0094	0.0855
21	16	17	0.0007	0.0089	0.0671
22	16	19	0.0016	0.0195	0.152
23	16	21	0.0008	0.0135	0.1274
24	16	24	0.0003	0.0059	0.034
25	17	18	0.0007	0.0082	0.06595
26	17	27	0.0013	0.0173	0.1608
27	21	22	0.0008	0.014	0.12825
28	22	23	0.0006	0.0096	0.0923
29	23	24	0.0022	0.035	0.1805
30	25	26	0.0032	0.0323	0.2565
31	26	27	0.0014	0.0147	0.1198
32	26	28	0.0043	0.0474	0.3901
33	26	29	0.0057	0.0625	0.5145
34	28	29	0.0014	0.0151	0.1245

Transformer data of the New England 39-bus sample power system

Transformer	Bus	Bus	R (per unit)	X (per unit)	Tab (per unit)
35	12	11	0.0016	0.0435	1.006
36	12	13	0.0016	0.0435	1.006
37	6	31	0	0.025	1.070
38	10	32	0	0.02	1.070
39	19	33	0.0007	0.0142	1.070
40	20	34	0.0009	0.018	1.009
41	22	35	0	0.0143	1.025
42	23	36	0.0005	0.0272	1.000
43	25	37	0.0006	0.0232	1.025
44	2	39	0	0.0181	1.025
45	29	38	0.0008	0.0156	1.025
46	19	20	0.0007	0.0138	1.060

The protection systems designed for the representative power system will be assumed to consist of hidden failures whose effects will be discussed in the next chapter. In this chapter, the main focus is to design relaying systems for the New England power system.

Most of the faults experienced in any power systems take place on transmission lines. Moreover, the majority of major cascading outages starts with abnormalities on transmission lines. The transmission lines, therefore, provide an excellent place to start the investigation. They will be provided with both phase and ground fault protections for both primary and secondary relays.

3.2 Phase Relay Setting Calculations

Pilot relaying system is the best protection system for line protection. It is commonly used in transmission system to protect critical lines where high-speed fault clearing is desirable. It provides virtually simultaneous tripping at both terminals, allowing high-speed reclosing which, in turn, permits the line to be loaded more closely to the steady-state stability limit and improving transmission stability of the overall power system. The high-speed tripping capability also reduces the possibility of conductor damaging. For these reasons, the sample system is assumed to have the pilot relaying protection system as its primary protection for phase faults.

As mentioned in the previous chapter, faults are detected by either directional comparison or phase comparison schemes. In the directional comparison scheme, a pilot relaying system is composed of an underreaching unit and/or overreaching unit. In addition, the directional comparison blocking scheme also has a blocking unit reaching behind the local terminal. To make the study uniform and results comparable, the following setting specifications are used for the pilot relays designed for the sample system: 70% of the length of the protected line for the underreaching unit, 150% for the overreaching unit and 180% for the unit reaching behind its local terminal. In the phase comparison scheme such as phase comparison blocking system, the high-level fault detector unit, FD_H, usually has a setting of 200% of the maximum load current. For the sample system, this current is assumed to occur when real and reactive loads throughout the system are twice their base case values.

The pilot relays do not provide back-up protection. In practice, this function is usually provided by phase distance relays. Since zone 1 of the phase distance relay is the primary protection system, the function already assumed by the pilot relays, only zones 2 and 3 distance relays are needed. For the New England system, the reach of zone 2 relay is set for 120% of the protected line length, and that of zone 3 relay is set for 100% of the protected line length plus 120% of the longest adjacent line. The reaches of zone 3 relays of some transmission lines may stretch beyond their load impedances during heavy demands or emergencies, therefore, the loadability check is required and sometimes it may not be possible to provide the lines with zone 3 distance relay protection.

The calculations for the settings of the pilot relays are relatively straightforward since they involve only line impedances or line lengths for the directional comparison relays, and load flow calculations for the phase comparison relays. Figure 3.2 shows the setting and characteristics of each unit that may be present in a directional pilot relay at bus A. Table 3.1 lists the settings of those units of some relays in the sample power system. Table 3.2 shows the high-level fault detector settings of some phase comparison relays.

3.3 Ground Relay Setting Calculations

In practice, the transmission systems are mostly protected from ground faults by directional time overcurrent and directional instantaneous overcurrent relays. This will be assumed to be the case for the sample system. The time overcurrent element characteristics used in this research is General Electric's IFC-53 relay [10]. Short circuit studies are performed for single-line-to-ground, double-line-to-ground and stub faults to establish maximum and minimum currents seen by transmission line relays at all locations.

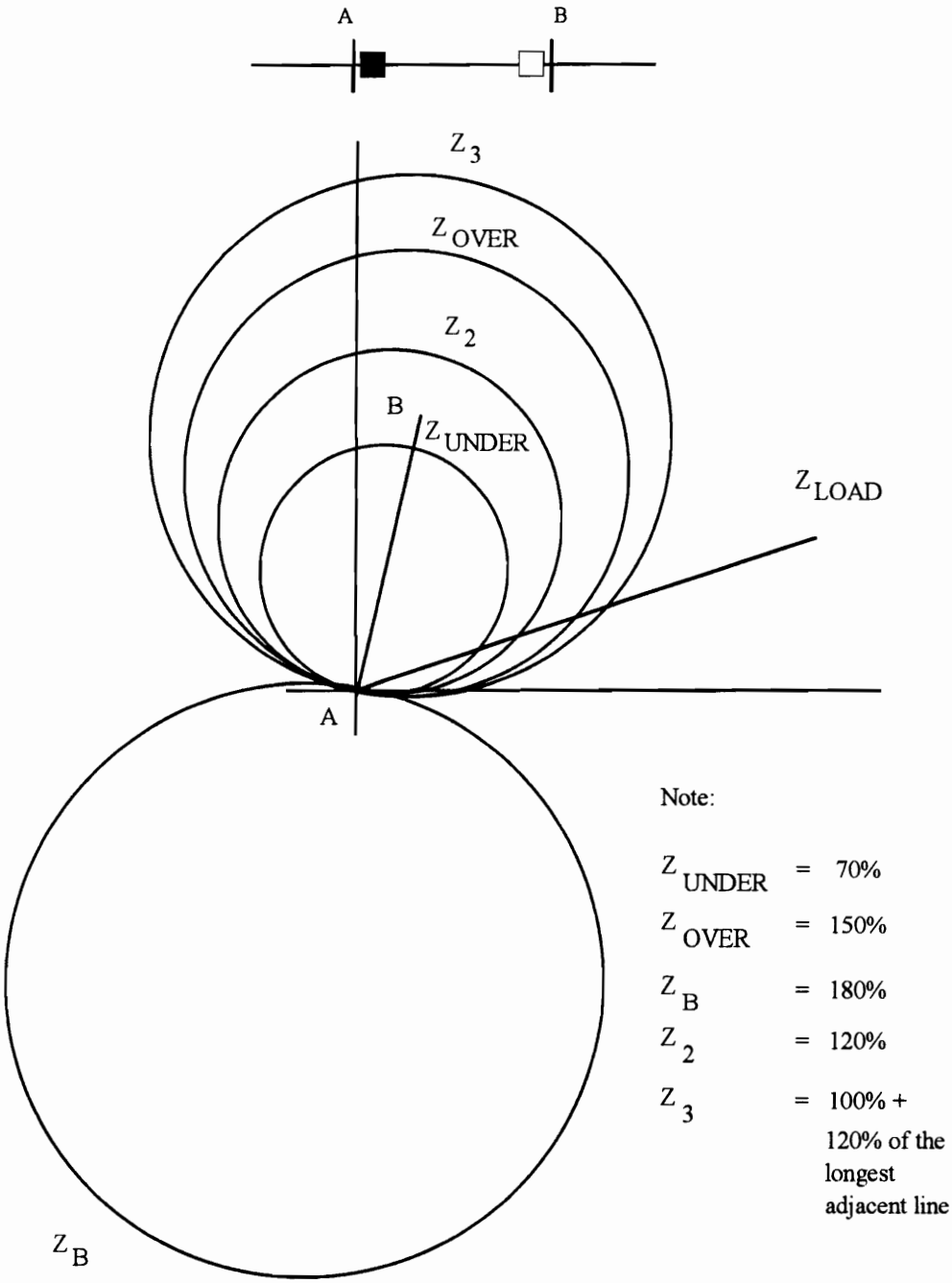

Figure 3.2 Settings and characteristics of directional pilot relay units

Table 3.1 Settings of some directional phase relays.

Relay		Z_{UNDER}	Z_2	Z_3	Z_{OVER}	Z_B	Z_{LOAD}	Load angle
x	y							
1	2	0.0289	0.0495	0.0630	0.0619	0.0742	0.860	-167.0
1	30	0.0175	0.0300	0.0550	0.0375	0.0450	0.860	13.0
2	1	0.0289	0.0495	0.0713	0.0619	0.0742	0.835	-18.7
2	3	0.0160	0.0182	0.0408	0.0227	0.0273	0.293	14.4
2	25	0.0078	0.0133	0.0500	0.0166	0.0200	0.435	160.8
3	2	0.0106	0.0182	0.0647	0.0227	0.0273	0.282	-164.4
3	4	0.0149	0.0256	0.0368	0.0320	0.0384	0.734	50.0
3	18	0.0093	0.0160	0.0232	0.0200	0.0240	1.977	-167.1
4	3	0.0149	0.0256	0.0395	0.3200	0.0384	0.635	-125.7
4	5	0.0090	0.0154	0.0263	0.0192	0.0231	0.734	-176.5
4	14	0.0090	0.0155	0.0391	0.0194	0.0233	0.367	-170.2
5	4	0.0090	0.0154	0.0384	0.0192	0.0231	0.737	-1.1
5	6	0.0018	0.0031	0.0326	0.0039	0.0047	0.221	-173.0
5	8	0.0079	0.0135	0.0549	0.0168	0.0202	0.313	10.5
6	5	0.0018	0.0031	0.0180	0.0039	0.0047	0.222	7.1
6	7	0.0065	0.0111	0.0148	0.0138	0.0166	0.236	12.3
6	11	0.0058	0.0099	0.0605	0.0123	0.0148	0.278	-175.0
7	6	0.0065	0.0111	0.0392	0.0138	0.0166	0.232	-168.4
7	8	0.0032	0.0055	0.0483	0.0069	0.0083	0.535	0.6
8	5	0.0079	0.0135	0.0266	0.0168	0.0202	0.308	-169.0
8	7	0.0032	0.0055	0.0157	0.0069	0.0083	0.534	-177.5
8	9	0.0255	0.0436	0.0644	0.0546	0.0655	0.918	-100.6

Table 3.2 High-level fault detector settings of some phase comparison relays

Relay		High-level fault detector setting
x	y	
1	2	5.292
1	30	5.292
2	1	5.886
2	3	17.192
2	25	10.146
3	2	17.340
3	4	6.932
3	18	2.332
4	3	7.278
4	5	8.334
4	14	12.648
5	4	8.302
5	6	23.360
5	8	15.332
6	5	23.616
6	7	20.816
6	11	15.982
7	6	20.858
7	8	9.222
8	5	15.368
8	7	9.212
8	9	7.712

The maximum ground fault current seen by a relay usually occurs when all the generators are in service with or without line outages, while the minimum current occurs when generation is limited and a ground fault occurs at the end of one of the adjacent lines downstream. For selectivity, the pickup setting of the instantaneous element at each relay location is set for 120% of its maximum fault current when a fault occurs at the end of the protected line section. For reliability, the pickup setting unit of the time-delay element of each relay is set for 50% of its minimum fault current. In practice, available standard CT ratios must be taken into account in the pickup setting determination; however, in this study it is assumed that the available ratios are continuous. Table 3.3 lists the pickup settings of the ground relays together with their final time-dial settings that will be discussed next.

The time-delay relay, in addition, has a time-dial setting which must be set to coordinate with the relays located downstream for backup protection. A time delay of 0.3 second is generally chosen. Nevertheless, in network systems as in the sample power system, this is not possible at few locations; subsequently, the time-delay setting has to be compromised but, in no circumstances, is it less than 0.25 second.

The transmission line network in the sample power system is divided into seven loops and line 22 as shown in Figure 3.3. In each loop, the time-dial settings of relays have to be determined in order in two directions: the counterclockwise and clockwise directions, designated X.1 and X.2, respectively,

Table 3.3 Settings of some ground relays

Relay		Min. current	Pickup setting	Max. current		Time-dial setting
x	y			(p.u.)	MPS	
1	2	0.396	0.198	25.8	130.3	0.50
1	30	0.577	0.289	14.9	51.8	8.12
2	1	5.888	2.944	76.1	25.9	3.75
2	3	8.091	4.046	70.5	17.4	4.17
2	25	1.792	0.896	63.5	70.9	9.03
3	2	1.491	0.746	34.7	46.6	9.50
3	4	3.921	1.961	44.8	22.8	5.42
3	18	9.218	4.609	45.6	9.9	3.40
4	3	4.474	2.237	41.0	18.3	4.51
4	5	5.523	2.762	40.1	14.5	3.13
4	14	3.328	1.664	43.8	26.3	6.09
5	4	6.033	3.017	48.2	16.0	5.38
5	6	1.645	0.823	41.9	50.9	9.81
5	8	4.663	2.332	58.6	25.2	5.56
6	5	3.983	1.992	57.4	28.8	8.22
6	7	14.031	7.016	63.7	9.1	3.69
6	11	7.635	3.818	52.0	13.6	6.62
7	6	0.317	0.159	32.4	204.2	0.50
7	8	5.960	2.980	35.8	12.0	5.37
8	5	1.906	0.953	38.7	40.6	5.26
8	7	0.900	0.450	40.4	89.7	4.38
8	9	5.693	2.847	41.1	14.4	3.08

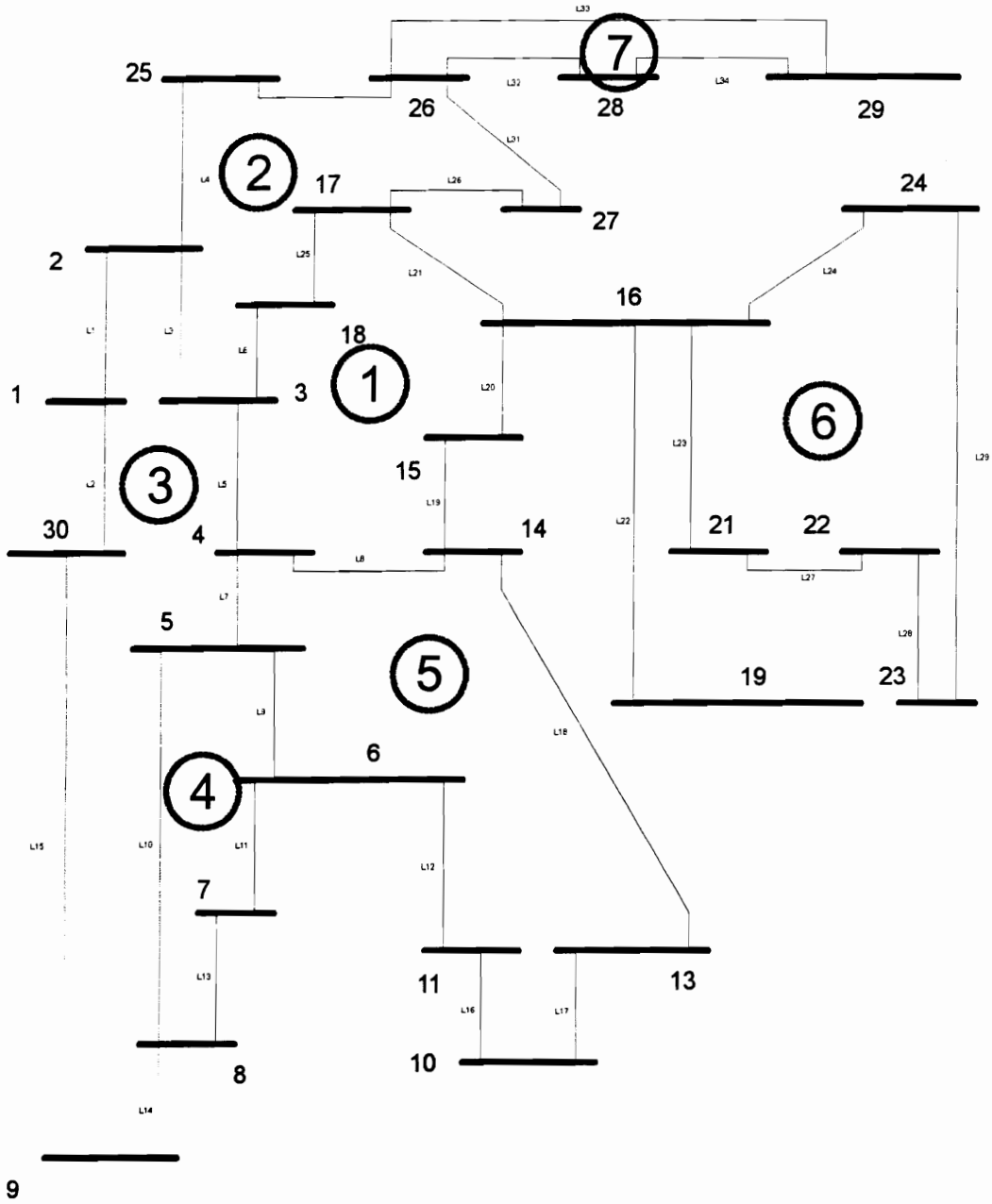

Figure 3.3 Seven loops in the ground relay setting determination

where X is the loop number. For example, in loop 1 in the counterclockwise direction, designated loop 1.1, if the starting point is relay $R_{17,16}$, then subsequent relays whose time-dial settings are to be determined are $R_{18,17}$, $R_{3,18}$, $R_{4,3}$, $R_{14,4}$, $R_{15,14}$, $R_{16,15}$, and then return to $R_{17,16}$. This is done so that each relay can back up the one immediately in front of itself in the loop in the counterclockwise direction. Similarly, in loop 1.2 or loop 1 in the clockwise direction, the time-dial settings are determined in succession for $R_{14,15}$, $R_{4,14}$, $R_{3,4}$, $R_{18,3}$, $R_{17,18}$, $R_{16,17}$, $R_{15,16}$ and then $R_{14,15}$, when the starting point in this direction is $R_{14,15}$. With this arrangement, there are two issues that need to be resolved.

Firstly, it is impossible that each of the relays in the loop can successfully back up the one immediately in front of itself for a complete cycle. This can easily be seen that when the setting determination returns to the starting point in the loop, the relay at the starting point which has already been set to operate fastest in the loop is required to operate after the last one due to the required coordination between the two. The last relay, however, has just been chosen to be the slowest one in the loop. These requirements are contradictory. Secondly, if there are many relays in the loop, the total coordination time delay may be impractically large or there may not be a time-dial setting suitable for a required time delay.

These issued can be solved by installing a high-speed relay that operates for only internal ground faults for at least one line in the loop. A pilot relay is usually chosen for this purpose. The single coordination chain in the loop will then be separated and the line will have, at each terminal, two relays for ground fault protection. The slower relay is used for back up protection of the downstream

relay. The faster one is for primary protection of the line, and any upstream relays will back up this fast relay instead of the slower one.

Usually, the determination of time-dial settings starts at the line with the smallest fault current located at the weakest bus in the system. In the sample system, however, we start at relay $R_{16,19}$ since it does not have to backup any relays; therefore, its time-dial setting can be set as sensitive as possible. Then we proceed to loop 1 and so forth. Normally, relay settings that have already been determined for the coordination requirement in one loop may have to be adjusted when the coordination in another loop is considered. This process is usually iterative to ensure that all the coordination requirements are met.

Settings for relay $R_{16,19}$

As mentioned earlier for reliability, all relays will be set to operate for 50% of the minimum fault current. Therefore, the pickup setting, I_p, of this relay is

$$I_p = \frac{5.541}{2} = 2.771 \text{ p.u.}$$

Since $R_{16,19}$ does not back up any relays, it should be set to operate as fast as possible. Subsequently, the time-dial setting, T_{ds}, of 0.5 is selected.

Settings for relays in loop 1.1

Relays that are in loop 1 in the counterclockwise direction, starting with the one backing up $R_{16,19}$, are $R_{17,16}$, $R_{18,17}$, $R_{3,18}$, $R_{4,3}$, $R_{14,4}$, $R_{15,14}$ and $R_{16,15}$. Again, their pickup settings are chosen to be 50% of their minimum fault currents. The determination of the time-dial settings will be done for the relays in the above order. From the relay characteristic curves, the operating time of $R_{16,19}$ when it sees its maximum current of 53.70 per unit. is 0.076 s. At the same time, $R_{17,16}$ sees a current of 16.96 per unit. The ratio of this current to the pickup setting of the relay is 16.96/0.606 = 27.99, i.e., 27.99 MPS which stands for the multiples of its pickup setting. With a coordination time delay of 0.3 s, $R_{17,16}$ should operate in

$$0.3 + 0.076 = 0.376 \text{ s}$$

For 27.99 MPS and operating time of 0.376 s, the corresponding time-dial setting is 4.08, which is chosen for $R_{17,16}$. The time-dial settings of the other relays in loop 1.1 are found in the same manner. The results are shown in Table 3.4..

Table 3.4 Settings of ground relays in loop 1.1

Relay		From	I_p	I_{bu}	I_{bu}	OT_{bu}	T_{ds}	I_{max}	I_{max}	OT_{max}
x	y	Loop	**(pu)**	(pu)	(MPS)	(s)		(pu)	(MPS)	(s)
16	19	-	**2.771**				**0.50**	53.70	19.37	0.076
17	16	-	**0.606**	16.96	27.99	0.376	**4.08**	29.82	49.21	0.350
18	17	-	**2.246**	17.94	7.990	0.650	**4.00**	25.21	11.22	0.507
3	18	-	**4.609**	25.21	5.470	0.807	**3.40**	45.59	9.890	0.471
4	3	-	**2.237**	17.09	7.640	0.771	**4.51**	40.96	18.31	0.462
14	4	-	**1.307**	17.95	13.73	0.760	**6.43**	41.11	31.45	0.583
15	14	-	**2.786**	14.40	5.170	0.880	**3.46**	34.70	12.46	0.420
16	15	-	**5.576**	34.70	6.220	0.720	**3.46**	61.41	11.01	0.448

where x and y are the local and remote buses of the relay, respectively. I_p is the pickup setting in per unit. I_{bu} is the current seen by the relay when acts as a backup for the adjacent downstream relay which sees its maximum fault current, I_{max}. I_{max} and I_{bu} are given both in per unit and multiples of the pickup setting (MPS). OT_{max} is the operating of the relay when it sees I_{max}. OT_{bu} is the operating time of the backup relay when it sees I_{bu}. Usually, a time delay of 0.3 s is used. Therefore, OT_{bu} of the backup relay is equal to OT_{max} of the primary relay plus 0.3 s. Subsequently the time-dial setting, T_{ds}, of the backup relay can be read from the characteristic curve when OT_{bu} and I_{bu} are known.

There may be a mis-coordination between $R_{17,16}$ and $R_{16,15}$ when the latter sees its maximum fault current and operates in 0.448 s. However, the former which backups the latter may operate in only 0.387 s which is faster than 0.448 s. To prevent this mis-coordination, a fast relay operates for ground faults within line 20 connecting buses 16 and 15 must be installed. Usually, the fast relay is a pilot relay. Therefore $R_{16,15}$ and corresponding $R_{15,16}$ will have both fast and slow relays for internal primary and external backup ground fault protection, respectively.

Settings for relays in loop 1.2

It follows from loop 1.1 that $R_{15,16}$ has a high-speed pilot relay to protect the line from internal ground faults. The operating time of the relay in this case can be negligible; therefore, $R_{14,15}$ can be chosen to be as sensitive as possible.

Table 3.5 shows the settings of all relays in this loop. The settings for $R_{15,16}$ shown in the table are those of the slower relay at that location.

Table 3.5 Settings of ground relays in loop 1.2

Relay		From	I_p	I_{bu}	I_{bu}	OT_{bu}	T_{ds}	I_{max}	I_{max}	OT_{max}
x	y	Loop	**(pu)**	(pu)	(MPS)	(s)		(pu)	(MPS)	(s)
14	15	-	**3.738**				**0.5**	41.49	11.10	0.092
4	14	-	**1.664**	17.98	10.81	0.392	**3.00**	43.84	26.35	0.280
3	4	-	**1.961**	17.01	8.670	0.580	**3.80**	44.78	22.84	0.364
18	3	-	**0.907**	16.61	18.31	0.664	**6.33**	30.08	33.16	0.567
17	18	-	**3.593**	30.08	8.370	0.867	**5.51**	44.83	12.48	0.672
16	17	-	**5.870**	33.37	5.680	0.972	**4.20**	56.00	9.540	0.597
15	16	-	**0.533**	10.56	19.81	0.897	**8.58**	18.70	35.08	0.784

Descriptions of the table headings can be found under Table 3.4.

Settings for relays in loops 2.1 and 2.2

In loop 2, line 3 connecting buses 2 and 3 is assumed to have a pilot relay for protecting the line against internal ground faults. In addition, the settings for $R_{18,3}$ and $R_{17,18}$ are already determined in loop 1.2, and the settings for $R_{18,17}$ and $R_{3,18}$ follow those in loop 1.1. The results of the setting calculation for the rest of the relays in the loop in both directions are shown in Tables 3.6 and 3.7.

Table 3.6 Settings of ground relays in loop 2.1

Relay		From	I_p	I_{bu}	I_{bu}	OT_{bu}	T_{ds}	I_{max}	I_{max}	OT_{max}
x	y	Loop	**(pu)**	(pu)	(MPS)	(s)		(pu)	(MPS)	(s)
18	3	1.2					**6.33**			
17	18	1.2					**5.51**			0.672
27	17	-	**2.588**	11.46	4.428	0.972	**3.15**	17.95	6.935	0.585
26	27	-	**3.796**	17.95	4.729	0.885	**3.13**	28.93	7.621	0.533
25	26	-	**1.111**	14.38	12.94	0.833	**6.83**	60.10	54.10	0.566
2	25	-	**0.896**	25.94	28.95	0.866	**9.03**	63.48	70.85	0.773
3	2	-	**0.746**	12.33	16.53	1.073	**9.50**	34.70	46.51	0.862

Table 3.7 Settings of ground relays in loop 2.2

Relay		From	I_p	I_{bu}	I_{bu}	OT_{bu}	T_{ds}	I_{max}	I_{max}	OT_{max}
x	y	Loop	**(pu)**	(pu)	(MPS)	(s)		(pu)	(MPS)	(s)
25	2	-	**0.488**				**0.5**	41.23	84.57	0.067
26	25	-	**0.718**	7.070	9.850	0.367	**2.60**	27.38	38.13	0.228
27	26	-	**0.534**	12.87	24.10	0.528	**5.50**	23.02	43.11	0.472
17	27	-	**3.889**	23.02	5.919	0.772	**3.54**	49.07	12.62	0.420
18	17	1.1		16.44	7.320	0.711	**4.00**			
3	18	1.1					**3.40**			0.471
2	3	-	**4.046**	28.50	7.044	0.771	**4.17**	70.47	17.42	0.432

Settings for relays in loops 3.1 and 3.2

The settings of relays in loop 3 in the counterclockwise direction are shown in Table 3.8 where those of relays $R_{3,4}$ and $R_{2,3}$ are taken from Tables 3.5 and 3.7, respectively. Relays in the clockwise direction have their settings shown in Table 3.9, following Table 3.4 for the settings of relay $R_{4,3}$ and Table 3.6 for relay $R_{3,2}$.

Table 3.8 Settings of ground relays in loop 3.1

Relay		From	I_p	I_{bu}	I_{bu}	OT_{bu}	T_{ds}	I_{max}	I_{max}	OT_{max}
x	y	Loop	**(pu)**	(pu)	(MPS)	(s)		(pu)	(MPS)	(s)
1	2	-	**0.198**				**0.5**	25.80	130.3	0.068
30	1	-	**1.125**	25.80	22.93	0.368	**3.84**	187.3	166.5	0.321
9	30	-	**0.291**	6.280	21.58	0.621	**6.24**	13.95	47.94	0.525
8	9	-	**2.847**	13.95	4.900	0.825	**3.08**	41.08	14.43	0.350
5	8	-	**2.332**	21.37	9.164	0.650	**4.45**	58.65	25.15	0.420
4	5	-	**2.762**	13.85	5.014	0.720	**2.78**	40.13	14.53	0.310
3	4	1.2		17.45	8.899	0.568	**3.80**			0.364
2	3	2.2		28.17	6.962	0.771	**4.17**			

Table 3.9 Settings of ground relays in loop 3.2

Relay		From	I_p	I_{bu}	I_{bu}	OT_{bu}	T_{ds}	I_{max}	I_{max}	OT_{max}
x	y	Loop	**(pu)**	(pu)	(MPS)	(s)		(pu)	(MPS)	(s)
4	3	1.1					**4.51**			0.462
5	4	-	**3.017**	23.01	7.627	0.762	**4.45**	48.16	15.96	0.478
8	5	-	**0.953**	7.310	7.671	0.778	**4.61**	38.72	40.63	0.403
9	8	-	**1.195**	9.380	7.849	0.703	**4.21**	25.82	21.61	0.410
30	9	-	**1.753**	25.82	14.73	0.710	**6.21**	187.2	106.8	0.482
1	30	-	**0.289**	6.550	22.66	0.782	**7.91**	14.94	51.70	0.666
2	1	-	**2.944**	14.94	5.705	0.966	**3.68**	76.13	25.86	0.344
3	2	2.1		11.38	15.25	1.289	**9.50**			

Settings for relays in loops 4.1 and 4.2

In loop 4, it is assumed that line 9 has a pilot relay and the time-dial and pickup settings of relay $R_{8,5}$ are taken from Table 3.9 while those of relay $R_{5,8}$ are

from Table 3.8. In Table 3.11, it can be seen that, if relay $R_{5,8}$ has a time-dial setting of 4.45 as the one in Table 3.8, there will be a time-delay of only 0.155 s between relays $R_{8,7}$ and $R_{5,8}$. For a proper coordination between the two relays, the time-dial setting of relay $R_{5,8}$ must be adjusted. The new settings are shown in Table 3.12. The time-dial settings of some relays in Table 3.8 must also be adjusted. This will be done later together with adjustments for some relays in Table 3.5.

Table 3.10 Settings of ground relays in loop 4.1

Relay		From	I_p	I_{bu}	I_{bu}	OT_{bu}	T_{ds}	I_{max}	I_{max}	OT_{max}
x	y	Loop	**(pu)**	(pu)	(MPS)	(s)		(pu)	(MPS)	(s)
8	5	3.2					**4.61**			0.403
7	8	-	**2.980**	29.34	9.846	0.703	**5.01**	35.76	12.00	0.622
6	7	-	**7.016**	35.76	5.097	0.922	**3.53**	63.71	9.081	0.519
5	6	-	**0.823**	14.68	17.84	0.819	**7.70**	41.89	50.90	0.649

Table 3.11 Settings of ground relays in loop 3.2

Relay		From	I_p	I_{bu}	I_{bu}	OT_{bu}	T_{ds}	I_{max}	I_{max}	OT_{max}
x	y	Loop	**(pu)**	(pu)	(MPS)	(s)		(pu)	(MPS)	(s)
7	6	-	**0.159**				**0.50**	32.36	204.2	0.068
8	7	-	**0.450**	32.36	71.91	0.368	**4.38**	40.37	89.71	0.365
5	8	3.1		31.00	13.29	0.520	**4.45**			0.420
6	5	-	**1.992**	44.80	22.49			57.31	28.77	

Table 3.12 Settings of ground relays in loop 3.2 with adjustment for relay $R_{5,8}$.

Relay		From	I_p	I_{bu}	I_{bu}	OT_{bu}	T_{ds}	I_{max}	I_{max}	OT_{max}
x	y	Loop	**(pu)**	(pu)	(MPS)	(s)		(pu)	(MPS)	(s)
7	6	-	**0.159**				**0.50**	32.36	204.2	0.068
8	7	-	**0.450**	32.36	71.91	0.368	**4.38**	40.37	89.71	0.365
5	8	-		31.00	13.29	0.665	**5.56**	58.65	25.15	0.520
6	5	-	**1.992**	44.80	22.49	0.820	**8.22**	57.31	28.77	0.771

Settings for relays in loops 5.1 and 5.2

The settings for relays in the counterclockwise direction in loop 5 are shown in Table 3.13. Since there is not enough time delay between relays $R_{14,13}$ and $R_{4,14}$, the time-dial setting of relays $R_{4,14}$ and $R_{5,4}$ need to be adjusted. They are shown in Table 3.14. This will affect the time-dial settings of other relays in loops 1.2, 2.1, 3.1 and 3.2 listed in Tables 3.5, 3.6, 3.8 and 3.9, respectively. The new settings of relays in those loops are shown in Tables 3.15, 3.16, 3.17 and 3.18, respectively.

Table 3.13 Settings of ground relays in loop 5.1

Relay		From	I_p	I_{bu}	I_{bu}	OT_{bu}	T_{ds}	I_{max}	I_{max}	OT_{max}
x	y	Loop	**(pu)**	(pu)	(MPS)	(s)		(pu)	(MPS)	(s)
11	6	-	**1.811**				**0.50**			0.075
10	11	-	**2.759**	36.90	13.37	0.325	**2.75**	48.50	17.58	0.280
13	10	-	**1.588**	11.74	7.393	0.530	**3.05**	27.64	17.41	0.315
14	13	-	**3.025**	27.64	9.137	0.565	**3.85**	38.86	12.85	0.460
4	14	1.2		23.37	14.04	0.345	**3.00**	43.84	26.35	0.280
5	4	3.2		26.82	8.890	0.666	**4.45**	48.16	15.96	0.478
6	5	4.2		40.85	20.51		**8.22**			

Table 3.14 Settings of ground relays in loop 5.1 with adjustments for relays $R_{4,14}$ and $R_{5,4}$.

Relay		From	I_p	I_{bu}	I_{bu}	OT_{bu}	T_{ds}	I_{max}	I_{max}	OT_{max}
x	y	Loop	**(pu)**	(pu)	(MPS)	(s)		(pu)	(MPS)	(s)
11	6	-	**1.811**				**0.50**			0.075
10	11	-	**2.759**	36.90	13.37	0.325	**2.75**	48.50	17.58	0.280
13	10	-	**1.588**	11.74	7.393	0.530	**3.05**	27.64	17.41	0.315
14	13	-	**3.025**	27.64	9.137	0.565	**3.85**	38.86	12.85	0.460
4	14	-		23.37	14.04	0.710	**6.09**	43.84	26.35	0.560
5	4	-		26.82	8.890	0.810	**5.38**	48.16	15.96	0.588
6	5	4.2		40.85	20.51	0.850	**8.22**			

Table 3.15 Settings of ground relays in loop 1.2 with the update from loop 5.1

Relay		From	I_p	I_{bu}	I_{bu}	OT_{bu}	T_{ds}	I_{max}	I_{max}	OT_{max}
x	y	Loop	**(pu)**	(pu)	(MPS)	(s)		(pu)	(MPS)	(s)
14	15	-	**3.738**				**0.5**	41.49	11.10	0.092
4	14	5.1		17.98	10.81	0.811	**6.09**	43.84	26.35	0.580
3	4	-	**1.961**	17.01	8.670	0.830	**5.42**	44.78	22.84	0.520
18	3	-	**0.907**	16.61	18.31	0.780	**7.38**	30.08	33.16	0.650
17	18	-	**3.593**	30.08	8.370	0.900	**5.72**	44.83	12.48	0.700
16	17	-	**5.870**	33.37	5.680	0.972	**4.20**	56.00	9.540	0.597
15	16	-	**0.533**	10.56	19.81	0.897	**8.58**	18.70	35.08	0.784

Table 3.16 Settings of ground relays in loop 2.1 with the updates from loop 1.2

Relay		From	I_p	I_{bu}	I_{bu}	OT_{bu}	T_{ds}	I_{max}	I_{max}	OT_{max}
x	y	Loop	**(pu)**	(pu)	(MPS)	(s)		(pu)	(MPS)	(s)
18	3	1.2					**7.38**			
17	18	1.2					**5.72**			0.700
27	17	-	**2.588**	11.46	4.428	0.972	**3.15**	17.95	6.935	0.585
26	27	-	**3.796**	17.95	4.729	0.885	**3.13**	28.93	7.621	0.533
25	26	-	**1.111**	14.38	12.94	0.833	**6.83**	60.10	54.10	0.566
2	25	-	**0.896**	25.94	28.95	0.866	**9.03**	63.48	70.85	0.773
3	2	-	**0.746**	12.33	16.53	1.073	**9.50**	34.70	46.51	0.862

Table 3.17 Settings of ground relays in loop 3.1 with the updates from loops 4.2 and 1.2

Relay		From	I_p	I_{bu}	I_{bu}	OT_{bu}	T_{ds}	I_{max}	I_{max}	OT_{max}
x	y	Loop	**(pu)**	(pu)	(MPS)	(s)		(pu)	(MPS)	(s)
1	2	-	**0.198**				**0.50**	25.80	130.3	0.068
30	1	-	**1.125**	25.80	22.93	0.368	**3.84**	187.3	166.5	0.321
9	30	-	**0.291**	6.280	21.58	0.621	**6.24**	13.95	47.94	0.525
8	9	-	**2.847**	13.95	4.900	0.825	**3.08**	41.08	14.43	0.350
5	8	4.2		21.37	9.164	0.818	**5.56**	58.65	25.15	0.520
4	5	-	**2.762**	13.85	5.014	0.820	**3.13**	40.13	14.53	0.360
3	4	1.2		17.45	8.899	0.810	**5.42**			0.520
2	3	2.2		28.17	6.962	0.771	**4.17**			

Table 3.18 Settings of ground relays in loop 3.2 with the updates from loop 5.1

Relay		From	I_p	I_{bu}	I_{bu}	OT_{bu}	T_{ds}	I_{max}	I_{max}	OT_{max}
x	y	Loop	**(pu)**	(pu)	(MPS)	(s)		(pu)	(MPS)	(s)
4	3	1.1					**4.51**			0.462
5	4	5.1		23.01	7.627	0.910	**5.38**	48.16	15.96	0.588
8	5	-	**0.953**	7.310	7.671	0.888	**5.26**	38.72	40.63	0.456
9	8	-	**1.195**	9.380	7.849	0.756	**4.53**	25.82	21.61	0.443
30	9	-	**1.753**	25.82	14.73	0.743	**6.49**	187.2	106.8	0.505
1	30	-	**0.289**	6.550	22.66	0.805	**8.12**	14.94	51.70	0.688
2	1	-	**2.944**	14.94	5.705	0.988	**3.75**	76.13	25.86	0.350
3	2	2.1		11.38	15.25	1.289	**9.50**			

Table 3.19 shows the setting calculation for relays in the clockwise direction in loop 5. The time-dial setting of relay $R_{5,6}$ which has been determined in loop 4.1 needs to be adjusted for a proper coordination with relay $R_{6,11}$. This is shown in Table 3.20. Since there are some adjustments from Tables 3.18 and 3.20, the settings of relays in loop 4.1 have to be recalculated. The new ones are shown in Table 3.21

Table 3.19 Settings of ground relays in loop 5.2

Relay		From	I_p	I_{bu}	I_{bu}	OT_{bu}	T_{ds}	I_{max}	I_{max}	OT_{max}
x	y	Loop	**(pu)**	(pu)	(MPS)	(s)		(pu)	(MPS)	(s)
4	5	3.1					**3.13**			0.360
14	4	1.1		22.69	17.40	0.670	**6.43**			0.583
13	14	-	**2.344**	26.71	11.40	0.883	**6.76**	39.72	16.95	0.720
10	13	-	**6.493**	39.72	6.117	1.020	**4.79**	52.56	8.905	0.775
11	10	-	**2.084**	15.83	7.596	1.075	**6.26**	35.91	17.23	0.672
6	11	-	**3.818**	35.91	9.405	0.972	**6.62**	52.02	13.62	0.786
5	6	4.1		14.68	17.84	0.823	**7.70**			

Table 3.20 Settings of ground relays in loop 5.2 with the adjustment for relay $R_{5,6}$

Relay		From	I_p	I_{bu}	I_{bu}	OT_{bu}	T_{ds}	I_{max}	I_{max}	OT_{max}
x	y	Loop	**(pu)**	(pu)	(MPS)	(s)		(pu)	(MPS)	(s)
4	5	3.1					**3.13**			0.360
14	4	1.1		22.69	17.40	0.670	**6.43**			0.583
13	14	-	**2.344**	26.71	11.40	0.883	**6.76**	39.72	16.95	0.720
10	13	-	**6.493**	39.72	6.117	1.020	**4.79**	52.56	8.905	0.775
11	10	-	**2.084**	15.83	7.596	1.075	**6.26**	35.91	17.23	0.672
6	11	-	**3.818**	35.91	9.405	0.972	**6.62**	52.02	13.62	0.786
5	6	-		14.68	17.84	1.086	**9.81**	41.89	50.90	0.892

Table 3.21 Settings of ground relays in loop 4.1 with the updates from loops 3.2 and 5.2

Relay		From	I_p	I_{bu}	I_{bu}	OT_{bu}	T_{ds}	I_{max}	I_{max}	OT_{max}
x	y	Loop	**(pu)**	(pu)	(MPS)	(s)		(pu)	(MPS)	(s)
8	5	3.2					**5.26**			0.456
7	8	-	**2.980**	29.34	9.846	0.756	**5.37**	35.76	12.00	0.669
6	7	-	**7.016**	35.76	5.097	0.969	**3.69**	63.71	9.081	0.542
5	6	5.2		14.68	17.84	1.082	**9.81**	41.89	50.90	0.892

Settings for relays in loops 6.1 and 6.2

The settings for relays in loop 6 are shown in Tables 3.22 and 3.23. In this loop, it is assumed that line 23 has a pilot relay installed.

Table 3.22 Settings of ground relays in loop 6.1

Relay		From	I_p	I_{bu}	I_{bu}	OT_{bu}	T_{ds}	I_{max}	I_{max}	OT_{max}
x	y	Loop	**(pu)**	(pu)	(MPS)	(s)		(pu)	(MPS)	(s)
16	19	-	**2.771**				**0.50**	53.70	19.37	0.076
24	16	-	**0.395**	10.09	25.54	0.376	**4.02**	14.71	37.24	0.357
23	24	-	**3.407**	14.71	4.318	0.657	**2.11**	49.53	14.54	0.246
22	23	-	**1.787**	22.68	12.69	0.546	**4.57**	49.14	27.50	0.424
21	22	-	**0.430**	7.400	17.21	0.724	**6.72**	29.46	68.51	0.544
16	21	-	**2.870**	29.46	10.26	0.844	**6.15**	62.72	21.85	0.609

Table 3.23 Settings of ground relays in loop 6.2

Relay		From	I_p	I_{bu}	I_{bu}	OT_{bu}	T_{ds}	I_{max}	I_{max}	OT_{max}
x	y	Loop	**(pu)**	(pu)	(MPS)	(s)		(pu)	(MPS)	(s)
22	21	-	**3.591**				**0.50**	55.60	14.10	0.085
23	22	-	**2.518**	13.87	5.508	0.385	**1.63**	34.76	13.80	0.200
24	23	-	**0.436**	7.560	17.34	0.500	**4.76**	43.57	99.93	0.380
16	24	-	**2.773**	43.57	15.71	0.680	**6.12**	66.30	23.91	0.592
21	16	-	**0.596**	15.90	26.70	0.892	**9.13**	26.37	44.24	0.823

Settings for relays in loops 7.1 and 7.2

Line 34 is assumed to have a pilot relay for internal ground fault protection. The settings of directional overcurrent ground relays in loop 7 are listed in Table 3.24 and 3.25

Table 3.24 Settings of ground relays in loop 7.1

Relay		From	I_p	I_{bu}	I_{bu}	OT_{bu}	T_{ds}	I_{max}	I_{max}	OT_{max}
x	y	Loop	**(pu)**	(pu)	(MPS)	(s)		(pu)	(MPS)	(s)
26	29	-	**0.020**				**0.50**	37.73	1935.	0.064
28	26	-	**1.075**				**4.58**	20.68	19.24	0.423
29	28	-	**2.623**	20.68	7.884	0.723	**4.36**	35.43	13.51	0.503

Table 3.25 Settings of ground relays in loop 7.2

Relay		From	I_p	I_{bu}	I_{bu}	OT_{bu}	T_{ds}	I_{max}	I_{max}	OT_{max}
x	y	Loop	**(pu)**	(pu)	(MPS)	(s)		(pu)	(MPS)	(s)
26	28	-	**0.773**				**0.50**	37.73	48.84	0.068
29	26	-	**1.075**				**4.58**	35.44	32.97	0.388
28	29	-	**0.773**	2.460	3.182	0.688	**1.36**	11.15	14.42	0.170

Chapter 4. Region of Vulnerability and Vulnerability Index

4.1 Introduction

After the hidden failure modes of common relaying schemes have been identified in Chapter 2, the next step is to determine a vulnerable region a relay hidden failure mode induces onto the power system. The location of the vulnerability region depends on the hidden failure mode. Logically, the reach or size of the region is dependent upon the settings of the relay with the failure since the operation of the relay, correct or incorrect, is mainly dictated by its settings. The settings are determined in previous chapter.

Two vulnerability regions of the same size may not be equally important since, for example, one may incorporate key transmission lines while the other may embody less critical circuit elements. The relative importance of each

vulnerably region, called a vulnerability index, is also defined and calculated in this chapter. In addition to the reach of the vulnerability region, the index should be determined taking into account any detrimental effects on the power system due to any possible operational contingencies that may occur inside the region. In this research, it is proposed that the instability of the power system be used as the criterion for computing the vulnerability index.

4.2 Region of Vulnerability

A region of vulnerability associated with a relay having a hidden failure is an area where one or several abnormal power system states can expose the hidden failure to incorrectly trip the relay. Typically, the abnormal power system states are faults, overloads, reverse power flows, etc. In this research, a fault is chosen as the triggering mechanism. If a fault occurs inside the region, the relay with the hidden failure will trip the line it is protecting; however, the action is inappropriate since the relay is not responsible for clearing the fault.

When the triggering mechanism is a fault, the reach or the size of the region depends largely on the type of the input signal taken by the relay, the mode of the hidden failure and the settings of the relay. There are two types of the input signals that a relay takes to operate for a fault: the distance of the fault from the relay location and the fault current magnitude. The distance of the fault can also be seen as a fault impedance or reactance.

For a distance-type relay, whose settings are based upon the distance, the reach of its region of vulnerability can be computed directly from the settings. However, for a current magnitude relay operating for the input current whenever the current exceeds its pickup setting, the reach of the region can not be computed directly from its pickup setting. Fortunately, the approximate boundary of the region can still be found since, in general, the farther the fault is from the relay, the smaller is the fault current. Consequently, we can find the locations beyond which the relay would not operate for the fault. Those locations will form a boundary of the region of vulnerability of this relay.

4.2.1 Region of vulnerability of distance-type relays

The reach of the region of vulnerability of a relay of this type is computed directly from its reach settings. For the study to be uniform and comparable across different relaying schemes, the reach settings of relaying systems operating for a fault within a certain distance of their locations are assumed to be the same for each unit. For example, the underreaching units of all the relaying schemes are set to 70% of the protected line length. The settings of all other units are defined in Chapter 3.

The location of the region relative to the relay is determined by the mode of the hidden failure. The hidden failure modes of the relays of distance-type and

their consequences on operations of the relays are listed in Tables 2.2 to 2.6 in Chapter 2.

From the examination of those tables, there are four types of regions of vulnerability whose reaches are a direct measure of the distance. They are different in either being behind the local or remote bus, and in the reach of the region.

Type 1 Reverse local bus region of vulnerability

Figure 4.1 shows this type of region of vulnerability for relay $R_{A,B}$ which protects line AB. The region is behind bus A, the local bus, and has a reach of half of the length of line AB. Table 4.1 lists the relaying schemes and their possible inherent hidden failure mode(s) for this type of vulnerability region. A fault inside the region, which is the shaded area, will expose the hidden failure which, in turn, causes relay $R_{A,B}$ to incorrectly operate and disconnects line AB from the system should relay $R_{A,B}$ be one of the relaying schemes with one of the hidden failure modes listed in Table 4.1.

Type 2 Reverse remote bus region of vulnerability

The region is behind bus B, the remote bus, and has a reach similar to that of Type 1 as depicted in Figure 4.2 for relay $R_{A,B}$. Table 4.2 catalogues the relaying schemes together with their possible hidden failure modes causing this type of vulnerability region. As in the case of Type 1, a fault inside the shaded area will cause line AB to be mistakenly tripped by relay $R_{A,B}$.

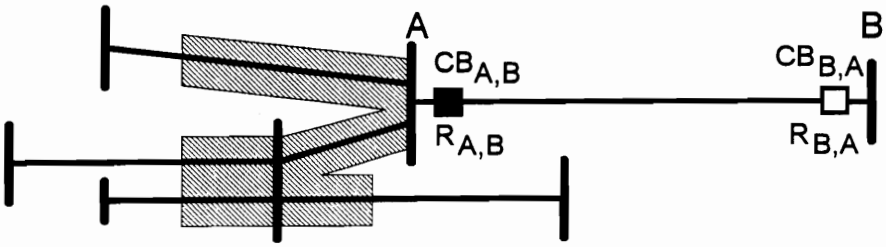

Note:

A = terminal A

B = terminal B

CB = Circuit breaker

R = Relay

■ = Relay in question

Lines connected behind terminal B are not shown.

Figure 4.1 Region of vulnerability Type 1.

Table 4.1 Hidden failure modes causing region of vulnerability Type 1.

Relay	Hidden failure modes
DCB	• FD_A cannot pick up • Transmitter fails to transmit
DCU	• D_A continuously picks up
POTT	• D_A continuously picks up
PUTT	• Transmitter continuously transmits

Note: DCB = Directional comparison blocking relay

DCU = Directional comparison unblocking relay

POTT = Permissive underreaching transfer trip

PUTT = Permissive underreaching transfer trip

FD_A = Fault detector or block unit of relay $R_{A,B}$

D_A = Directional trip unit or relay $R_{A,B}$

R_A = Receiver unit of relay $R_{A,B}$

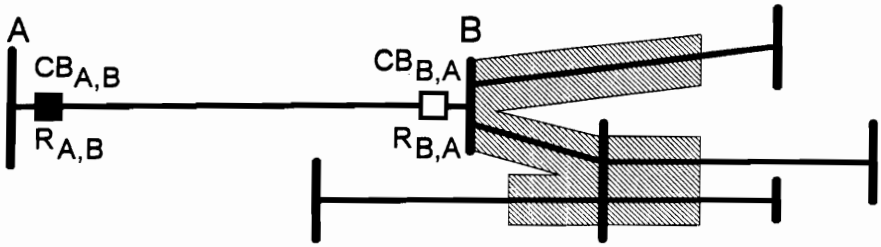

Note:

A = terminal A

B = terminal B

CB = Circuit breaker

R = Relay

■ = Relay in question

Lines connected behind terminal A are not shown.

Figure 4.2 Region of vulnerability Type 2.

Table 4.2 Hidden failure modes causing region of vulnerability Type 2.

Relay	Hidden failure modes
DCB	• R_A cannot pick up
DCU	• R_A continuously picks up
POTT	• R_A continuously picks up
PUTT	• R_A continuously picks up

Note: See Note under Table 4.1.

Type 3 Zone 2 region of vulnerability

When the timer of zone 2 distance relay fails closed, this type of region of vulnerability exists. The region is behind the remote bus and has a reach of 20% of the length of the line protected by the relay.

Type 4 Zone 3 region of vulnerability

This type of region of vulnerability exists if the contacts of the timer of zone 3 distance relay fail in the closing position. The region is behind the remote bus and has a reach of 120% of the length of the longest line behind the remote bus.

Region of vulnerability calculation for distance-type relays

An example of the calculation of the vulnerability region of a distance-type relay with a hidden failure mode causing region of vulnerability Type 1 is shown below for relay $R_{2,1}$. Figure 4.3 on the next page depicts the vulnerability region of this relay. The region, shown by the shaded area, is located behind bus 2, the local bus. It has a has a reach of 50% of line L1 or 0.0411/2 = 0.02055 per unit in all directions behind bus 2. In the direction of line L4, the region covers all L4, which is 0.0086 per unit, and goes beyond bus 25 to cover part of L30 by 0.02055-0.0086 or 0.01195 per unit. Similarly, in the direction of L3, the region covers all L3 which is 0.0151 per unit length, and part of lines L5 and L6 each by 0.02055 - 0.0151 = 0.00545 per unit. Therefore, the region of vulnerability Type 1 of $R_{2,1}$ is 0.0086 + 0.01195 + 0.0151 + 2(0.00545) = 0.0466 per unit.

A fault inside the shaded vulnerability region which is not in the zone of

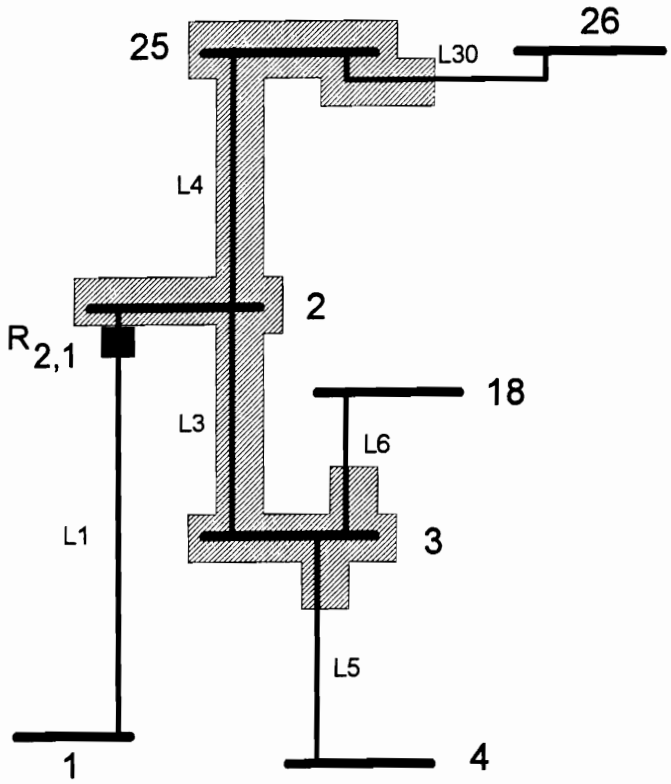

Figure 4.3 Region of vulnerability Type 1 of relay $R_{2,1}$.

protection of relay $R_{2,1}$ will trigger the relay to incorrectly trip line L1 causing the second contingency. For example, if there is a fault on line L4, the fault will be normally cleared by relays $R_{2,25}$ and $R_{25,2}$ by disconnecting line L4. In addition to this first contingency, line L1 will also be disconnected due to the hidden failure in relay $R_{2,1}$. Tables 4.3 to 4.6 lists the region of vulnerability Type 1 to Type 4 of some relays.

4.2.2 Region of vulnerability of current magnitude relays

There are three relaying schemes examined for hidden failures in Chapter 2 that fall into this category should they possess the listed hidden failures. They are phase comparison relaying scheme, direction overcurrent ground relay and transformer differential relay. A transformer differential relay will have a hidden failure if either one or both of their restraint coils are shorted. It is likely that the transformer relay with the hidden failure will operate for a current higher than the normal load current. However, the exact operation of the failed transformer relay, however, is difficult to predict depending upon the characteristics of other devices such as, the error characteristics and the ratios of the installed current transformers, and the characteristics of the transformer being protected by the relay. Therefore, the transformer differential relays will be excluded from this study.

The other two relaying schemes operating for a fault current whenever it exceeds their pickup settings have their the hidden failures and the effects of the

Table 4.3 Region of vulnerability Type 1

Relay		Protected line	Region of vulnerability	Triggering line (s)					
x	y								
1	2	1	0.0205	2					
1	30	2	0.0125	1					
2	1	1	0.0466	3	5	6	4	30	
2	3	3	0.0151	1	4				
2	25	4	0.0086	1	3				
3	2	3	0.0151	5	6				
3	4	5	0.0213	3	6				
3	18	6	0.0133	3	5				
4	3	5	0.0213	7	8				
4	5	7	0.0128	5	8				
4	14	8	0.0129	5	7				
5	4	7	0.0166	9	11	12	10		
5	6	9	0.0026	7	10				
5	8	10	0.0142	7	9	11	12		
6	5	9	0.0026	11	12				
6	7	11	0.0112	9	7	10	12		
6	11	12	0.0097	9	7	10	11		
7	6	11	0.0046	13					
7	8	13	0.0023	11					
8	5	10	0.0112	13	11	14			
8	7	13	0.0046	10	14				
8	9	14	0.0389	10	7	9	11	12	13
9	8	14	0.0181	15					
9	30	15	0.0125	14					
10	11	16	0.0022	17					
10	13	17	0.0022	16					
11	6	12	0.0041	16					
11	10	16	0.0022	12					
13	10	17	0.0022	18					
13	14	18	0.0050	17	16				
14	4	8	0.0129	18	19				
14	13	18	0.0101	8	19				
14	15	19	0.0217	8	18	17			

Note: x and y are the local and remote buses of the relay, respectively.

Table 4.3 Region of vulnerability Type 1 (continued)

Relay		Protected	Region of	Triggering							
x	y	line	vulnerability	line (s)							
15	14	19	0.0152	20	21	22	23	24			
15	16	20	0.0047	19							
16	15	20	0.0188	21	22	23	24				
16	17	21	0.0178	20	22	23	24				
16	19	22	0.0399	20	19	21	25	26	23	24	29
16	21	23	0.0270	20	21	22	24	29			
16	24	24	0.0118	20	21	22	23				
17	16	21	0.0089	25	26						
17	18	25	0.0082	21	26						
17	27	26	0.0173	21	25	6					
18	3	6	0.0066	25							
18	17	25	0.0041	6							
21	16	23	0.0068	27							
21	22	27	0.0070	23							
22	21	27	0.0070	28							
22	23	28	0.0048	27							
23	22	28	0.0048	29							
23	24	29	0.0175	28	27						
24	16	24	0.0030	29							
24	23	29	0.0550	24	20	19	21	25	26	22	23
25	2	4	0.0043	30							
25	26	30	0.0237	4	1	3					
26	25	30	0.0485	31	26	32	33				
26	27	31	0.0221	30	32	33					
26	28	32	0.0711	30	31	26	33				
26	29	33	0.0938	30	31	26	32				
27	17	26	0.0087	31							
27	26	31	0.0074	26							
28	26	32	0.0237	34	33						
28	29	34	0.0076	32							
29	26	33	0.0313	34	32						
29	28	34	0.0076	33							
30	1	2	0.0125	15							
30	9	15	0.0125	2							

Table 4.4 Region of vulnerability Type 2

Relay		Protected	Region of	Triggering					
x	y	line	vulnerability	line (s)					
1	2	1	0.0466	3	5	6	4	30	
1	30	2	0.0125	15					
2	1	1	0.0205	2					
2	3	3	0.0151	5	6				
2	25	4	0.0043	30					
3	2	3	0.0151	1	4				
3	4	5	0.0213	7	8				
3	18	6	0.0066	25					
4	3	5	0.0213	3	6				
4	5	7	0.0166	9	11	12	10		
4	14	8	0.0129	18	19				
5	4	7	0.0128	5	8				
5	6	9	0.0026	11	12				
5	8	10	0.0112	13	11	14			
6	5	9	0.0026	7	10				
6	7	11	0.0046	13					
6	11	12	0.0041	16					
7	6	11	0.0112	9	7	10	12		
7	8	13	0.0046	10	14				
8	5	10	0.0142	7	9	11	12		
8	7	13	0.0023	11					
8	9	14	0.0181	15					
9	8	14	0.0389	10	7	9	11	12	13
9	30	15	0.0125	2					
10	11	16	0.0022	12					
10	13	17	0.0022	18					
11	6	12	0.0097	9	7	10	11		
11	10	16	0.0022	17					
13	10	17	0.0022	16					
13	14	18	0.0101	8	19				
14	4	8	0.0129	5	7				
14	13	18	0.0050	17	16				
14	15	19	0.0152	20	21	22	23	24	

Note: x and y are the local and remote buses of the relay, respectively.

Table 4.4 Region of vulnerability Type 2 (continued)

Relay		Protected	Region of	Triggering							
x	y	line	vulnerability	line (s)							
15	14	19	0.0217	8	18	17					
15	16	20	0.0188	21	22	23	24				
16	15	20	0.0047	19							
16	17	21	0.0089	25	26						
16	21	23	0.0068	27							
16	24	24	0.0030	29							
17	16	21	0.0178	20	22	23	24				
17	18	25	0.0041	6							
17	27	26	0.0087	31							
18	3	6	0.0133	3	5						
18	17	25	0.0082	21	26						
19	16	22	0.0399	20	19	21	25	26	23	24	29
21	16	23	0.0270	20	21	22	24	29			
21	22	27	0.0070	28							
22	21	27	0.0070	23							
22	23	28	0.0048	29							
23	22	28	0.0048	27							
23	24	29	0.0550	24	20	19	21	25	26	22	23
24	16	24	0.0118	20	21	22	23				
24	23	29	0.0175	28	27						
25	2	4	0.0086	1	3						
25	26	30	0.0485	31	26	32	33				
26	25	30	0.0237	4	1	3					
26	27	31	0.0074	26							
26	28	32	0.0237	34	33						
26	29	33	0.0313	34	32						
27	17	26	0.0173	21	25	6					
27	26	31	0.0221	30	32	33					
28	26	32	0.0711	30	31	26	33				
28	29	34	0.0076	33							
29	26	33	0.0938	30	31	26	32				
29	28	34	0.0076	32							
30	1	2	0.0125	1							
30	9	15	0.0125	14							

Table 4.5 Region of vulnerability Type 3

Relay		Protected line	Region of vulnerability	Triggering line (s)		
x	y					
1	2	1	0.0164	3	4	
1	30	2	0.0050	15		
2	1	1	0.0082	2		
2	3	3	0.0060	5	6	
2	25	4	0.0017	30		
3	2	3	0.0060	1	4	
3	4	5	0.0085	7	8	
3	18	6	0.0027	25		
4	3	5	0.0085	3	6	
4	5	7	0.0051	9	10	
4	14	8	0.0052	18	19	
5	4	7	0.0051	5	8	
5	6	9	0.0010	11	12	
5	8	10	0.0045	13	14	
6	5	9	0.0010	7	10	
6	7	11	0.0018	13		
6	11	12	0.0016	16		
7	6	11	0.0037	9	12	
7	8	13	0.0018	10	14	
8	5	10	0.0045	7	9	
8	7	13	0.0009	11		
8	9	14	0.0073	15		
9	8	14	0.0145	10	13	11
9	30	15	0.0050	2		
10	11	16	0.0009	12		
10	13	17	0.0009	18		
11	6	12	0.0033	9	11	
11	10	16	0.0009	17		
13	10	17	0.0009	16		
13	14	18	0.0040	8	19	
14	4	8	0.0052	5	7	
14	13	18	0.0020	17		
14	15	19	0.0043	20		

Note: x and y are the local and remote buses of the relay, respectively.

Table 4.5 Region of vulnerability Type 3 (continued)

Relay		Protected line	Region of vulnerability	Triggering line (s)				
x	y							
15	14	19	0.0087	8	18			
15	16	20	0.0075	21	22	23	24	
16	15	20	0.0019	19				
16	17	21	0.0036	25	26			
16	21	23	0.0027	27				
16	24	24	0.0012	29				
17	16	21	0.0071	20	22	23	24	
17	18	25	0.0016	6				
17	27	26	0.0035	31				
18	3	6	0.0053	3	5			
18	17	25	0.0033	21	26			
19	16	22	0.0156	20	21	23	24	
21	16	23	0.0108	20	21	22	24	
21	22	27	0.0028	28				
22	21	27	0.0028	23				
22	23	28	0.0019	29				
23	22	28	0.0019	27				
23	24	29	0.0103	24	20	21	22	23
24	16	24	0.0047	20	21	22	23	
24	23	29	0.0070	28				
25	2	4	0.0034	1	3			
25	26	30	0.0194	31	32	33		
26	25	30	0.0065	4				
26	27	31	0.0029	26				
26	28	32	0.0095	34				
26	29	33	0.0125	34				
27	17	26	0.0069	21	25			
27	26	31	0.0088	30	32	33		
28	26	32	0.0284	30	31	33		
28	29	34	0.0030	33				
29	26	33	0.0375	30	31	32		
29	28	34	0.0030	32				
30	1	2	0.0050	1				
30	9	15	0.0050	14				

Table 4.6 Region of vulnerability Type 4

Relay		Protected	Region of	Triggering								
x	y	line	vulnerability	line (s)								
1	2	1	0.0501	3	5	6	4	30				
1	30	2	0.0300	15	14							
2	1	1	0.0300	2	15							
2	3	3	0.0594	5	7	8	6	25	21	26		
2	25	4	0.0517	30	31	32	33					
3	2	3	0.1155	1	2	4	30	31	32	33		
3	4	5	0.0363	7	9	11	12	10	8	18	19	
3	18	6	0.0115	25	21	26						
4	3	5	0.0393	3	1	4	6	25				
4	5	7	0.0400	9	11	13	12	16	10	14		
4	14	8	0.0521	18	17	16	12	19	20			
5	4	7	0.0680	5	3	6	8	18	17	19		
5	6	9	0.0793	11	13	10	7	14	12	16	17	18
				8	19							
5	8	10	0.1298	13	11	9	7	5	8	18	19	12
				16	17	14	15					
6	5	9	0.0374	7	5	8	10	13	14			
6	7	11	0.0064	13	10	14						
6	11	12	0.1213	16	17	18	8	5	7	9	11	10
				19	20	21	22	23	24			
7	6	11	0.1049	9	7	5	8	18	19	10	13	14
				12	16	17						
7	8	13	0.1454	10	7	5	8	18	19	9	11	12
				16	17	14	15					
8	5	10	0.0460	7	5	8	9	11	13	12	16	17
8	7	13	0.0129	11	9	12						
8	9	14	0.0300	15	2							
9	8	14	0.0291	10	7	9	13	11				
9	30	15	0.0300	2	1							
10	11	16	0.1577	12	9	7	5	3	6	8	18	17
				19	10	13	11	14				
10	13	17	0.1954	18	8	5	3	6	7	9	11	13
				10	14	12	16	19	20	21	25	26
				22	23	24	29					

Note: x and y are the local and remote buses of the relay, respectively.

Table 4.6 Region of vulnerability Type 4 (continued)

Relay		Protected	Region of	Triggering								
x	y	line	vulnerability	line (s)								
11	6	12	0.0875	9	7	5	8	18	19	10	13	11
				14								
11	10	16	0.0336	17	18	8	19					
13	10	17	0.0444	16	12	9	7	10	11	13		
13	14	18	0.0656	8	5	7	9	10	19	20		
14	4	8	0.0799	5	3	6	7	9	11	13	12	16
				10	14							
14	13	18	0.1188	17	16	12	9	7	5	8	19	10
				13	11	14						
14	15	19	0.0169	20	21	22	23	24				
15	14	19	0.0335	8	5	7	18	17	16			
15	16	20	0.1042	21	25	6	26	22	23	27	24	29
16	15	20	0.0304	19	8	18						
16	17	21	0.0415	25	6	26	31					
16	21	23	0.0168	27	28							
16	24	24	0.0420	29	28							
17	16	21	0.0897	20	19	22	23	27	24	29		
17	18	25	0.0186	6	3	5						
17	27	26	0.0235	31	30	32	33					
18	3	6	0.0658	3	1	4	30	5	7	8		
18	17	25	0.0771	21	20	19	22	23	24	29	26	31
19	16	22	0.0721	20	19	21	25	26	23	27	24	29
21	16	23	0.1042	20	19	21	25	6	26	22	24	29
21	22	27	0.0172	28	29							
22	21	27	0.0243	23	20	21	22	24				
22	23	28	0.0453	29	24	20	21	22	23			
23	22	28	0.0172	27	23							
23	24	29	0.0106	24	20	21	22	23				
24	16	24	0.1042	20	19	21	25	6	26	22	23	27
24	23	29	0.0326	28	27	23						
25	2	4	0.1701	1	2	3	5	7	9	10	8	18
				19	6	25	2	20	22	23	24	26
25	26	30	0.3618	31	26	21	20	19	8	18	22	23
				27	28	24	29	25	6	3	1	4
				5	7	32	34	33				
26	25	30	0.0512	4	1	3	5	6				

Table 4.6 Region of vulnerability Type 4 (continued)

Relay		Protected	Region of	Triggering								
x	y	line	vulnerability	line (s)								
26	27	31	0.0242	26	21	25						
26	28	32	0.0181	34	33							
26	29	33	0.0187	34	32							
27	17	26	0.0267	21	20	22	23	24	25	6		
27	26	31	0.2531	30	4	1	3	5	6	25	32	34
				33								
28	26	32	0.3740	30	4	1	3	5	6	25	31	26
				21	20	19	8	18	22	23	27	28
				24	29	7	33	34				
28	29	34	0.1000	33	30	31	32					
29	26	33	0.2586	30	4	1	3	5	6	31	26	21
				20	19	22	23	27	24	29	25	32
				34								
29	28	34	0.0758	32	30	31	33					
30	1	2	0.0575	1	3	4						
30	9	15	0.0508	14	10	13	11					

failures on the relay operations listed in Chapter 2 in Tables 2.7 and 2.9, respectively. In both schemes, their directional sensitivity will be lost and the relays will operate as a simple overcurrent relay. In addition, the phase comparison blocking scheme will operate for a fault outside its zone of protection.

Furthermore, unlike the reach of the vulnerability region of the distance-type relays, the one of these relays cannot be found directly from their pickup settings. This is because the relays do not operate for a fault based upon the distance of the fault from the relays' locations. However, since the fault current seen by these relays generally gets smaller as the fault gets further away from the locations of the relays, we can indirectly determine the boundary of the region of vulnerability of these two relaying schemes.

First, it is assumed that the boundary of the region is on the system buses. Then, a short-circuit calculation is performed when a fault is place on the buses one at a time starting with the one closest to the relay in question. If the relay sees a current higher than its pickup settings, the bus having the fault is considered to be inside the region. In each direction, the process stops when the relay sees a current smaller than its pickup setting and the boundary of the region is regarded to be on the last bus considered to be inside the region.

In the determination of the boundary of the vulnerability region of the phase comparison blocking scheme, a three-phase fault is used, while a single-line-to-ground fault is employed in the case of the directional overcurrent ground relay. Figure 4.4 shows an example of the vulnerability region determination for a phase

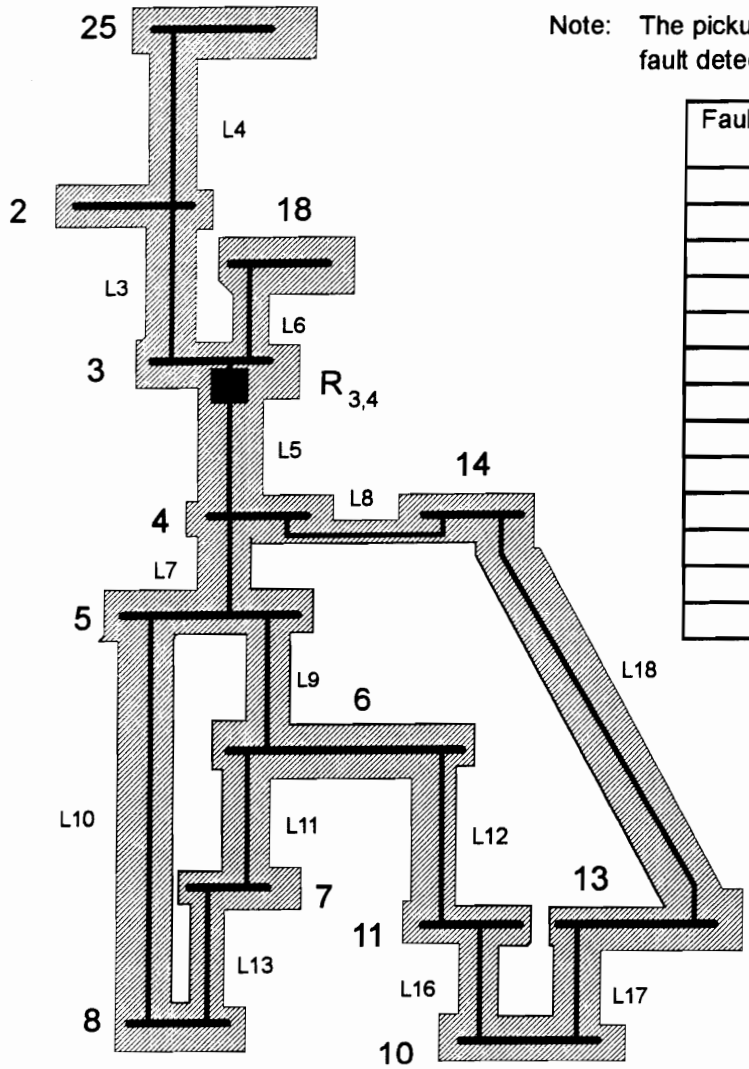

Note: The pickup setting of the high-level fault detector of relay $R_{3,4}$ is 6.932 per uni

Faulted Bus	Current Seen by the relay
3	18.19
18	11.64
2	9.47
25	8.15
4	20.62
5	14.66
6	14.07
11	12.09
10	11.87
7	11.44
8	11.25
14	13.13
13	11.69

■ = Relay in question

Figure 4.4 Region of vulnerability of phase comparison blocking relay $R_{3,4}$.

comparison blocking relay, $R_{3,4}$. The relay is assumed to have a hidden failure mode of the low level fault detector continuously picking up. Table 4.7 lists the regions of vulnerability of some phase comparison blocking relays with this hidden failure. The vulnerability regions of some directional overcurrent ground relays with the hidden failure mode of polarizing source or coil being shorted are enumerated in Table 4.8.

In general, it can be seen from the two tables that relays with large pickup settings tend to have small regions of vulnerability while those with small settings have large regions. In some cases, the vulnerability regions of relays with small settings may cover almost the entire sample power system. The region of vulnerability of a phase comparison blocking relay, $R_{27,17}$ in Table 4.7 and that of a directional ground overcurrent relay, $R_{26,29}$ in Table 4.8 reveal this situation.

4.3 Vulnerability Index Calculations

After the regions of vulnerability of relays with hidden failures have been defined, the next step is to determine the relative importance of each region, called vulnerability index. A relay with a particular possible hidden failure mode will have a vulnerability index attached to it. The index will correspond to the severity level of any operational contingencies that may be induced by the hidden failure mode. Relays with high vulnerability indices, then, should be monitored and controlled closely to prevent their hidden failures from being exposed and causing

Table 4.7 Region of vulnerability of phase comparison blocking relay.

Relay		FD_H setting	Region of vulnerability	Triggering line (s)								
x	y											
1	2	5.292	0.1212	1	2	3	4	6	44			
2	1	5.886	0.1079	1	2	3	4	44				
2	3	17.192	0.0151	3								
2	25	10.146	0.0641	4	30	43						
3	4	6.932	0.1385	3	4	5	6	7	8	9	10	11
				12	13	16	17	18				
3	18	2.332	0.4712	1	2	3	4	5	6	7	9	10
				11	12	13	16	20	21	22	23	24
				25	26	27	28	29	30	31	39	40
				41	42	44	46					
4	3	7.287	0.1385	3	4	5	6	7	8	9	10	11
				12	13	1	17	18				
4	5	8.334	0.0699	5	7	9	10	11	12	13		
4	14	12.648	0.0129	8								
5	4	8.302	0.0699	5	7	9	10	11	12	13		
6	11	15.982	0.0168	12	16	17						
7	8	9.222	0.0046	13								
8	7	9.212	0.0046	13								
8	9	7.712	0.1415	7	8	9	10	11	12	13	14	15
				16	17	18						
9	8	7.040	0.1415	7	8	9	10	11	12	13	14	15
				16	17	18						
10	11	16.494	0.0125	12	16							
10	13	14.860	0.0144	17	18							
13	10	14.902	0.0144	17	18							
13	14	14.112	0.0187	16	17	18						
14	15	1.752	0.5387	7	8	9	10	11	12	13	14	15
				16	17	18	19	20	21	22	23	24
				25	26	27	28	29	31	35	36	37
				38	39	40	41	42	46			

Note: x and y are the local and remote buses of the relay, respectively. FD_H stands for high-fault level detector.

Table 4.7 Region of vulnerability of phase comparison blocking relay (continued)

Relay		FD_H setting	Region of vulnerability	Triggering line (s)								
x	y											
17	16	10.446	0.1807	3	4	6	20	21	22	23	24	25
				26	27	30	31					
17	18	8.912	0.0514	3	6	21	24	25				
18	17	8.900	0.0514	3	6	21	24	25				
17	27	1.686	0.5998	3	4	5	6	7	8	9	10	11
				12	13	16	17	18	19	20	21	22
				23	24	25	26	27	28	29	30	31
				32	33	34	39	40	41	42	43	45
				46								
27	17	1.488	0.6198	3	4	5	6	7	8	9	10	11
				12	13	16	17	18	19	20	21	22
				23	24	25	26	27	28	29	30	31
				32	33	34	38	39	40	41	42	43
				45	46							
22	23	3.032	0.1001	27	28	29	41	42				
23	22	3.314	0.0651	27	28	41	42					
25	26	4.244	0.2637	4	21	26	30	31	32	33	34	43
				44	45							
26	25	5.000	0.2367	4	26	30	31	32	33	34	43	45
26	25	5.000	0.2367	4	26	30	31	32	33	34	43	45
27	26	11.672	0.0320	26	31							
28	26	5.772	0.0307	34	45							

Table 4.8 Region of vulnerability of directional overcurrent ground relay.

Relay		Pickup	Region of	Triggering								
x	y	setting	vulnerability	line (s)								
1	2	0.198	0.0500	2	15							
1	30	0.289	0.2543	1	3	4	5	6	8	18	19	20
				21	23	24	25	26	30	31		
2	3	4.046	0.0086	4								
2	25	0.896	0.1956	1	2	3	5	6	7	8	9	10
				11	12	13	18	25				
3	2	0.746	0.3288	5	6	7	8	9	10	11	12	13
				14	16	17	18	19	20	21	22	23
				24	25	26	27	28	29	31		
3	4	1.961	0.0625	3	4	6	25	26				
3	18	4.609	0.0151	3								
4	3	2.237	0.0802	7	8	9	10	11	12	13	16	17
				18								
4	5	2.762	0.1268	3	5	6	8	18	19	20	21	24
				25								
4	14	1.664	0.0901	3	5	6	7	9	10	11	13	
5	4	3.017	0.0358	9	10	11	12	13				
5	6	0.823	0.3692	1	2	3	4	5	6	7	8	10
				13	14	15	18	19	20	21	23	24
				25	26	30	31					
5	8	2.332	0.0128	7								
6	5	1.992	0.0082	12								
6	11	3.818	0.0767	7	9	10	11	13	14			
7	6	0.159	0.1924	1	2	3	5	7	10	13	14	15
7	8	2.980	0.0092	11								
8	9	2.847	0.486	7	9	10	11	12	13			
9	30	0.291	0.2511	3	5	6	7	8	9	10	11	12
				13	14	16	17	18	19	20	21	23
				24	25	26						
10	11	2.759	0.0144	17	18							
11	10	2.084	0.0849	7	9	10	11	12	13	14		
13	10	1.588	0.1851	3	5	6	7	8	18	19	20	21
				23	24	25	26	31				

Note: x and y are the local and remote buses of the relay, respectively.

Table 4.8 Region of vulnerability of directional overcurrent ground relay (continued)

Relay		Pickup	Region of	Triggering
x	y	setting	vulnerability	line (s)
13	14	2.344	0.0086	16 17
14	15	3.788	0.0552	7 8 9 2 16 17 18
16	15	5.576	0.0059	24
17	16	0.606	0.3373	1 3 4 5 6 7 9 10 11
				13 25 26 30 31 32 33 34
17	18	3.593	0.0697	20 21 23 24 26 31
18	17	2.246	0.0497	3 5 6
21	16	0.596	0.0236	27 28
21	22	0.430	0.4149	3 4 5 6 7 8 9 10 11
				11 12 13 16 17 18 19 20 21
				22 23 24 25 26 30 31 32 33
				34
22	23	1.787	0.0140	27
24	23	0.436	0.2899	3 4 5 6 7 8 9 10 11
				11 12 13 16 17 18 19 20 21
				22 23 24 25 26 30 31
26	25	0.718	0.2379	6 19 20 21 23 24 25 26 31
				32 33 34
26	29	0.020	0.4759	1 2 3 4 5 6 7 8 9
				10 11 12 13 14 15 16 17 18
				19 20 21 22 23 24 25 26 27
				28 29 30 31
28	29	0.773	0.1946	3 4 6 20 21 23 24 25 26
				30 31 32

relay misoperations, and ultimately to reduce the likelihood of major power system cascading outages or blackouts.

In addition to the region of vulnerability, the vulnerability index should be determined taking into account the performance of the power system when experiencing those contingencies. One of the possible power system performance measurements that can be used in the determination of the index is the loss of the integrity or stability of the power system.

Upon the loss of stability, the power system will be disintegrated into islands. Generators close to the points of the disturbance will experience severe shocks. Frequencies in the islands will deviate from the normal system frequency. Generators operating in the generation-deficit islands under low frequencies for a long period will have their lives shortened. To maintain the islands' frequencies, customers' load will be shed. If the load shedding does not take place quickly enough, generators will be disconnected from the rest of the system to prevent any possible damages, causing more overloads on other system elements and eventually cascading power system outages.

In this research, therefore, the loss of stability of the power system will be used as the criterion for computing the vulnerability index. Both steady-state and transient stability aspects of the system are investigated. The process starts with placing a fault on a line inside the region of vulnerability of a relay with a hidden failure. The fault is normally cleared by other relays protecting the faulted line; this is a first contingency. In addition to the first contingency, the relay with the

hidden failure also operates and mistakenly trips the line it is protecting, causing a second contingency. Contingencies more than the second one may also happen. However, it is limited to the second contingency in this research.

4.3.1 Steady-state instability index

With multiple contingencies, the power transfer capability of the overall power system can be limited and the remaining transmission system may not be able to support the scheduled generation and load. This is an indication of the steady-state stability limit of the power system being exceeded. In this situation, the load flow analysis will not converge to a solution. The lack of a load flow, then, can be used to as a sign of steady-state stability limit violation. However, there are two objections to this approach.

Firstly, for a particular second contingency case, it can be a very time-consuming process to run the load flow study until a decision can be reached regarding the existence of a load flow solution. Furthermore, in a large power system, there can be a tremendously large number of possible second contingencies that need to be studied. The straightforward load flow studies to determine the existence or lack of a load flow solution of all the cases can be prohibitive.

Secondly, this approach does not give an indication of how much the steady-state stability limit is exceeded if the load flow solution does not exist, or

how close to the limit a particular case is if it has a load flow solution. In other words, the stability margin or the vulnerable level is not available. If the margin is not available, two cases with the same condition regarding the existence of a load flow solution are considered to be the same, even though one may be more vulnerable than the other.

In this research, as in other contingency studies such as DC load flow, an approximate but fast method is preferred . Here, some parameters are examined for a possibility of any of them being an index indicating the steady-state instability or vulnerability level of the power system following a second contingency. This instability or vulnerability level is attached to the contingency of the combination of the dropped lines. Then, the vulnerability index of a region of vulnerability is computed taking into account the possible second contingency in the region. Followings are the parameters that have been examined:

1. Normalized change in the determinant of $[B']$.
2. Normalized change in the determinant of $[B'']$.
3. Power flows of the lines involved in the contingency, F_t.
4. The largest deviation of the phase angle from the base case value in the first iteration of a load flow analysis, $\Delta\theta_l$.
5. The norm of the deviation of all phase angles from the base case values in the first iteration of a load flow analysis:

$$\Delta\theta_t = \sqrt{\Delta\theta_1^2 + \Delta\theta_2^2 + \ldots + \Delta\theta_N^2}$$

The determinants of the two susceptance matrices, $[B']$ and $[B'']$ that are formed purely from the parameters of transmission lines that are in service in the system [11,12] may be considered as a susceptance connecting an equivalent two-terminal system. In the two-terminal system, the simplified maximum power that can be transferred is proportional to the susceptance connecting the two terminals, $P_{max} \propto B$. Any changes in the susceptance will affect the power transfer capability. Therefore, the changes in the determinants of the two matrices may signify the severity level of the contingency. The normalization is based on the determinants of the base case matrices. Line flow of the dropped line is used by some researchers as a criterion for contingency ranking [17-22]. The changes in bus angles from the base case values, normally, indicate how much the power system is perturbed by the contingency. When the contingency is severe, the angles, usually, move far away from their base case values. The changes in the first iteration in the load flow study are used for the quick approximation of the exact changes.

The results of the calculations for some second contingencies are shown in Tables 4.9 to 4.13. Each table is sorted in the descending order of each of the above five parameters. The contingencies that do not have a load flow solution are shown with an asterisk in front of them.

For any one of the five parameters to be a reliable index of the steady-state instability, it is expected that the contingencies without a load flow solution will cluster near the top of the table listed in the descending order of that parameter. For example, for the normalized change in the determinant of $[B']$ to be a reliable

Table 4.9 Steady-state instability index in the descending order of $\Delta det[B']$

Lines	$\Delta det[B']$	$\Delta det[B'']$	$\Delta\theta_l$	$\Delta\theta_t$	Flows
12 16	0.993	0.989	19.5	74.9	1403
* 3 4	0.993	0.894	25.6	66.6	1313
* 20 24	0.992	0.983	20.9	80.9	851
21 25	0.992	0.980	14.3	48.0	863
17 18	0.991	0.988	8.4	26.6	1253
* 10 13	0.989	0.976	87.8	137.2	1017
9 12	0.984	0.968	16.3	48.8	1683
25 26	0.984	0.961	17.3	51.0	467
21 26	0.983	0.958	14.3	48.2	536
* 9 11	0.982	0.971	49.6	190.4	1869
* 20 23	0.981	0.950	39.8	103.2	1304
1 4	0.980	0.815	27.6	66.5	779
9 10	0.976	0.969	5.5	15.6	1637
7 9	0.973	0.965	5.5	15.5	1347
8 18	0.971	0.948	10.0	27.2	1135
* 3 6	0.968	0.934	32.0	97.3	921
* 1 3	0.965	0.817	53.6	127.3	1088
* 13 14	0.964	0.922	9.3	31.5	706
5 6	0.955	0.907	10.5	40.7	417
* 7 8	0.954	0.930	25.8	63.5	878
18 19	0.951	0.912	10.0	27.3	676
* 3 5	0.949	0.894	23.3	58.7	1118
1 6	0.947	0.850	10.7	42.4	383
* 11 12	0.945	0.911	19.8	64.3	1554
31 32	0.945	0.888	32.6	67.3	902
* 1 5	0.941	0.772	20.5	75.6	552
8 19	0.937	0.888	14.7	30.8	601
31 33	0.928	0.852	33.3	69.6	902
1 30	0.925	0.733	13.0	40.2	488
* 5 8	0.924	0.883	15.5	69.5	837
* 5 7	0.924	0.884	8.0	25.1	655
* 10 14	0.912	0.811	9.8	35.0	965
7 10	0.883	0.850	7.5	16.9	986
30 32	0.880	0.750	12.6	35.7	494
30 33	0.842	0.670	13.3	37.3	594

Note: Δ designates change in; *det* stands for determinant.

Table 4.10 Steady-state instability index in the descending order of $\Delta det[B'']$

Lines	$\Delta det[B']$	$\Delta det[B'']$	$\Delta\theta_l$	$\Delta\theta_t$	Flows
12 16	0.993	0.989	19.5	74.9	1403
17 18	0.991	0.988	8.4	26.6	1253
* 20 24	0.992	0.983	20.9	80.9	851
21 25	0.992	0.980	14.3	48.0	863
* 10 13	0.989	0.976	87.8	137.2	1017
* 9 11	0.982	0.971	49.6	190.4	1869
9 10	0.976	0.969	5.5	15.6	1637
9 12	0.984	0.968	16.3	48.8	1683
7 9	0.973	0.965	5.5	15.5	1347
25 26	0.984	0.961	17.3	51.0	467
21 26	0.983	0.958	14.3	48.2	536
* 20 23	0.981	0.950	39.8	103.2	1304
8 18	0.971	0.948	10.0	27.2	1135
* 3 6	0.968	0.934	32.0	97.3	921
* 7 8	0.954	0.930	25.8	63.5	878
* 13 14	0.964	0.922	9.3	31.5	706
18 19	0.951	0.912	10.0	27.3	676
* 11 12	0.945	0.911	19.8	64.3	1554
5 6	0.955	0.907	10.5	40.7	417
* 3 5	0.949	0.894	23.3	58.7	1118
* 3 4	0.993	0.894	25.6	66.6	1313
8 19	0.937	0.888	14.7	30.8	601
31 32	0.945	0.888	32.6	67.3	902
* 5 7	0.924	0.884	8.0	25.1	655
* 5 8	0.924	0.883	15.5	69.5	837
31 33	0.928	0.852	33.3	69.6	902
7 10	0.883	0.850	7.5	16.9	986
1 6	0.947	0.850	10.7	42.4	383
* 1 3	0.965	0.817	53.6	127.3	1088
1 4	0.980	0.815	27.6	66.5	779
* 10 14	0.912	0.811	9.8	35.0	965
* 1 5	0.941	0.772	20.5	75.6	552
30 32	0.880	0.750	12.6	35.7	494
1 30	0.925	0.733	13.0	40.2	488
30 33	0.842	0.670	13.3	37.3	594

Note: Δ designates change in; *det* stands for determinant.

Table 4.11 Steady-state instability index in the descending order of $\Delta\theta_l$

Lines	$\Delta det[B']$	$\Delta det[B'']$	$\Delta\theta_l$	$\Delta\theta_t$	Flows
* 10 13	0.989	0.976	87.8	137.2	1017
* 1 3	0.965	0.817	53.6	127.3	1088
* 9 11	0.982	0.971	49.6	190.4	1869
* 20 23	0.981	0.950	39.8	103.2	1304
31 33	0.928	0.852	33.3	69.6	902
31 32	0.945	0.888	32.6	67.3	902
* 3 6	0.968	0.934	32.0	97.3	921
1 4	0.980	0.815	27.6	66.5	779
* 7 8	0.954	0.930	25.8	63.5	878
* 3 4	0.993	0.894	25.6	66.6	1313
* 3 5	0.949	0.894	23.3	58.7	1118
* 20 24	0.992	0.983	20.9	80.9	851
* 1 5	0.941	0.772	20.5	75.6	552
* 11 12	0.945	0.911	19.8	64.3	1554
12 16	0.993	0.989	19.5	74.9	1403
25 26	0.984	0.961	17.3	51.0	467
9 12	0.984	0.968	16.3	48.8	1683
* 5 8	0.924	0.883	15.5	69.5	837
8 19	0.937	0.888	14.7	30.8	601
21 25	0.992	0.980	14.3	48.0	863
21 26	0.983	0.958	14.3	48.2	536
30 33	0.842	0.670	13.3	37.3	594
1 30	0.925	0.733	13.0	40.2	488
30 32	0.880	0.750	12.6	35.7	494
1 6	0.947	0.850	10.7	42.4	383
5 6	0.955	0.907	10.5	40.7	417
8 18	0.971	0.948	10.0	27.2	1135
18 19	0.951	0.912	10.0	27.3	676
* 10 14	0.912	0.811	9.8	35.0	965
* 13 14	0.964	0.922	9.3	31.5	706
17 18	0.991	0.988	8.4	26.6	1253
* 5 7	0.924	0.884	8.0	25.1	655
7 10	0.883	0.850	7.5	16.9	986
9 10	0.976	0.969	5.5	15.6	1637
7 9	0.973	0.965	5.5	15.5	1347

Note: Δ designates change in; *det* stands for determinant.

Table 4.12 Steady-state instability index in the descending order of $\Delta\theta_t$

Lines	$\Delta det[B']$	$\Delta det[B'']$	$\Delta\theta_l$	$\Delta\theta_t$	Flows
* 9 11	0.982	0.971	49.6	190.4	1869
* 10 13	0.989	0.976	87.8	137.2	1017
* 1 3	0.965	0.817	53.6	127.3	1088
* 20 23	0.981	0.950	39.8	103.2	1304
* 3 6	0.968	0.934	32.0	97.3	921
* 20 24	0.992	0.983	20.9	80.9	851
* 1 5	0.941	0.772	20.5	75.6	552
12 16	0.993	0.989	19.5	74.9	1403
31 33	0.928	0.852	33.3	69.6	902
* 5 8	0.924	0.883	15.5	69.5	837
31 32	0.945	0.888	32.6	67.3	902
* 3 4	0.993	0.894	25.6	66.6	1313
1 4	0.980	0.815	27.6	66.5	779
* 11 12	0.945	0.911	19.8	64.3	1554
* 7 8	0.954	0.930	25.8	63.5	878
* 3 5	0.949	0.894	23.3	58.7	1118
25 26	0.984	0.961	17.3	51.0	467
9 12	0.984	0.968	16.3	48.8	1683
21 26	0.983	0.958	14.3	48.2	536
21 25	0.992	0.980	14.3	48.0	863
1 6	0.947	0.850	10.7	42.4	383
5 6	0.955	0.907	10.5	40.7	417
1 30	0.925	0.733	13.0	40.2	488
30 33	0.842	0.670	13.3	37.3	594
30 32	0.880	0.750	12.6	35.7	494
* 10 14	0.912	0.811	9.8	35.0	965
* 13 14	0.964	0.922	9.3	31.5	706
8 19	0.937	0.888	14.7	30.8	601
18 19	0.951	0.912	10.0	27.3	676
8 18	0.971	0.948	10.0	27.2	1135
17 18	0.991	0.988	8.4	26.6	1253
* 5 7	0.924	0.884	8.0	25.1	655
7 10	0.883	0.850	7.5	16.9	986
9 10	0.976	0.969	5.5	15.6	1637
7 9	0.973	0.965	5.5	15.5	1347

Note: Δ designates change in; *det* stands for determinant.

Table 4.13 Steady-state instability index in the descending order of line flows

Lines	$\Delta det[B']$	$\Delta det[B'']$	$\Delta\theta_l$	$\Delta\theta_t$	Flows
* 9 11	0.982	0.971	49.6	190.4	1869
9 12	0.984	0.968	16.3	48.8	1683
9 10	0.976	0.969	5.5	15.6	1637
* 11 12	0.945	0.911	19.8	64.3	1554
12 16	0.993	0.989	19.5	74.9	1403
7 9	0.973	0.965	5.5	15.5	1347
* 3 4	0.993	0.894	25.6	66.6	1313
* 20 23	0.981	0.950	39.8	103.2	1304
17 18	0.991	0.988	8.4	26.6	1253
8 18	0.971	0.948	10.0	27.2	1135
* 3 5	0.949	0.894	23.3	58.7	1118
* 1 3	0.965	0.817	53.6	127.3	1088
* 10 13	0.989	0.976	87.8	137.2	1017
7 10	0.883	0.850	7.5	16.9	986
* 10 14	0.912	0.811	9.8	35.0	965
* 3 6	0.968	0.934	32.0	97.3	921
31 32	0.945	0.888	32.6	67.3	902
31 33	0.928	0.852	33.3	69.6	902
* 7 8	0.954	0.930	25.8	63.5	878
21 25	0.992	0.980	14.3	48.0	863
* 20 24	0.992	0.983	20.9	80.9	851
* 5 8	0.924	0.883	15.5	69.5	837
1 4	0.980	0.815	27.6	66.5	779
* 13 14	0.964	0.922	9.3	31.5	706
18 19	0.951	0.912	10.0	27.3	676
* 5 7	0.924	0.884	8.0	25.1	655
8 19	0.937	0.888	14.7	30.8	601
30 33	0.842	0.670	13.3	37.3	594
* 1 5	0.941	0.772	20.5	75.6	552
21 26	0.983	0.958	14.3	48.2	536
30 32	0.880	0.750	12.6	35.7	494
1 30	0.925	0.733	13.0	40.2	488
25 26	0.984	0.961	17.3	51.0	467
5 6	0.955	0.907	10.5	40.7	417
1 6	0.947	0.850	10.7	42.4	383

Note: Δ designates change in; *det* stands for determinant.

steady-state instability index, it is expected that in Table 4.9 the cases without a load flow solution which have an asterisk in front of them are located near the top of the table. However, this is not the case and from the inspection of the five tables, the most reliable parameters seem to be the changes in the angles.

The changes in the angles by themselves are, nevertheless, not sufficiently effective in indicating the load flow divergence. In some cases, where the angle changes are large but the other three parameters are small, the load flow solutions still exist. Consequently, a weighted combination of all five parameters may yield a better steady-state instability index than any one of them by itself.

The index computed from the five parameters, normalized by their largest values and weighted equally, has been tried and the results are shown in Table 4.14. The table is sorted in the descending order of the index. As mentioned earlier, if the computed index is sufficiently reliable, we would expect the cases without a load flow solution to cluster in the top part of the table. Obviously, this is not the case. A number of contingencies without a load flow solution are still scattered throughout the table and at least one of the cases, dropping lines 5 and 7, is even located close to the bottom of the table.

A further examination reveals that there are relatively large loads connected to the terminals of the lines involved in these cases. These terminal loads evidently play a role in determining the existence of a load flow solution of the power system following the contingencies. Consequently, the total load at the terminals involved in the contingency should also be considered as one of the

Table 4.14 Steady-state instability index using 5 parameters

Lines	$\Delta det[B']$	$\Delta det[B'']$	$\Delta\theta_l$	$\Delta\theta_t$	Flows	SII
* 9 11	0.982	0.971	49.6	190.4	1869	4.452
* 10 13	0.989	0.976	87.8	137.2	1017	4.308
* 1 3	0.965	0.817	53.6	127.3	1088	3.652
* 20 23	0.981	0.950	39.8	103.2	1304	3.616
12 16	0.993	0.989	19.5	74.9	1403	3.315
9 12	0.984	0.968	16.3	48.8	1683	3.265
* 3 6	0.968	0.934	32.0	97.3	921	3.261
* 11 12	0.945	0.911	19.8	64.3	1554	3.220
* 3 4	0.993	0.894	25.6	66.6	1313	3.218
* 20 24	0.992	0.983	20.9	80.9	851	3.075
31 32	0.945	0.888	32.6	67.3	902	3.054
31 33	0.928	0.852	33.3	69.6	902	3.020
* 3 5	0.949	0.894	23.3	58.7	1118	3.008
* 7 8	0.954	0.930	25.8	63.5	878	2.984
9 10	0.976	0.969	5.5	15.6	1637	2.938
1 4	0.980	0.815	27.6	66.5	779	2.882
17 18	0.991	0.988	8.4	26.6	1253	2.867
21 25	0.992	0.980	14.3	48.0	863	2.839
7 9	0.973	0.965	5.5	15.5	1347	2.784
* 5 8	0.924	0.883	15.5	69.5	837	2.773
8 18	0.971	0.948	10.0	27.2	1135	2.771
25 26	0.984	0.961	17.3	51.0	467	2.666
21 26	0.983	0.958	14.3	48.2	536	2.644
* 1 5	0.941	0.772	20.5	75.6	552	2.629
* 13 14	0.964	0.922	9.3	31.5	706	2.531
* 10 14	0.912	0.811	9.8	35.0	965	2.520
8 19	0.937	0.888	14.7	30.8	601	2.486
18 19	0.951	0.912	10.0	27.3	676	2.483
7 10	0.883	0.850	7.5	16.9	986	2.427
5 6	0.955	0.907	10.5	40.7	417	2.418
* 5 7	0.924	0.884	8.0	25.1	655	2.379
1 6	0.947	0.850	10.7	42.4	383	2.346
1 30	0.925	0.733	13.0	40.2	488	2.279
30 32	0.880	0.750	12.6	35.7	494	2.228
30 33	0.842	0.670	13.3	37.3	594	2.176

Note: Δ designates change in; *det* stands for determinant; SII for steady-state instability index.

factors in the computation of the steady-state instability index. The index computed from the six normalized parameters with equal weights is shown in Table 4.15 which is sorted in descending order of the index. This table is clearly better than the previous one and the new index now should be adequately effective in indicating the relative vulnerable or instability level of each contingency.

Table 4.16 shows only some contingencies out of 1035 possible second contingencies in the sample power system. Three hundred eighty-eigth of these contingencies result in a bus left disconnected from the rest of the system. If the steady-state issue of the entire system is the primary concern, there is clealy no load flow solutions for these cases. This can easily be detected when the determinant of the susceptance matrixis equal to zero. Moreover, ninety-two second contingencies cause a very large change in the determinant of the susceptance matrix from its base case value. For example, the determinant changes from the order of 10^{78} to 10^{70}. The sample power system, obviously, cannot cope with these severe disturbance and it will lose the steady state stability. In these two situations, the maximum value of the stady-state instability index computed in a way described in the previous chapter is assumed. The maximum value of the index is six.

Having the relative vulnerable level for each contingency, the next step is to compute the steady-state vulnerability index of each region of vulnerability. It should be caclculated from the region taking into account the effects of contingencies involving the line protected by the relay and the others inside the region. Since some lines are only partially covered by the region, only that portion

Table 4.15 Steady-state instability index using 6 parameters

Lines	$\Delta det[B']$	$\Delta det[B'']$	$\Delta\theta_l$	$\Delta\theta_t$	Flows	Loads	SII
* 10 13	0.989	0.976	87.8	137.2	1017	1350	5.292
* 9 11	0.982	0.971	49.6	190.4	1869	497	4.814
* 20 23	0.981	0.950	39.8	103.2	1304	1295	4.560
* 20 24	0.992	0.983	20.9	80.9	851	1293	4.017
* 1 3	0.965	0.817	53.6	127.3	1088	322	3.887
* 1 5	0.941	0.772	20.5	75.6	552	1686	3.858
* 3 5	0.949	0.894	23.3	58.7	1118	1159	3.853
* 3 6	0.968	0.934	32.0	97.3	921	803	3.846
* 5 8	0.924	0.883	15.5	69.5	837	1372	3.773
* 7 8	0.954	0.930	25.8	63.5	878	1066	3.761
31 33	0.928	0.852	33.3	69.6	902	854	3.642
31 32	0.945	0.888	32.6	67.3	902	778	3.621
* 3 4	0.993	0.894	25.6	66.6	1313	548	3.618
* 13 14	0.964	0.922	9.3	31.5	706	1350	3.515
* 5 7	0.924	0.884	8.0	25.1	655	1472	3.452
* 11 12	0.945	0.911	19.8	64.3	1554	249	3.402
5 6	0.955	0.907	10.5	40.7	417	1319	3.380
9 10	0.976	0.969	5.5	15.6	1637	551	3.339
* 10 14	0.912	0.811	9.8	35.0	965	1102	3.323
12 16	0.993	0.989	19.5	74.9	1403	0	3.315
9 12	0.984	0.968	16.3	48.8	1683	0	3.265
7 10	0.883	0.850	7.5	16.9	986	1084	3.217
21 25	0.992	0.980	14.3	48.0	863	491	3.197
7 9	0.973	0.965	5.5	15.5	1347	533	3.172
8 18	0.971	0.948	10.0	27.2	1135	533	3.159
8 19	0.937	0.888	14.7	30.8	601	887	3.132
21 26	0.983	0.958	14.3	48.2	536	620	3.096
1 4	0.980	0.815	27.6	66.5	779	229	3.048
1 6	0.947	0.850	10.7	42.4	383	962	3.047
25 26	0.984	0.961	17.3	51.0	467	452	2.995
17 18	0.991	0.988	8.4	26.6	1253	0	2.867
1 30	0.925	0.733	13.0	40.2	488	737	2.816
30 33	0.842	0.670	13.3	37.3	594	793	2.754
30 32	0.880	0.750	12.6	35.7	494	716	2.750
18 19	0.951	0.912	10.0	27.3	676	355	2.741

Note: Δ designates change in; *det* stands for determinant; SII for steady-state instability index.

of the lines should be used in the vulnerability index calculation. This index is computed as follows:

$$\sum_{i=1}^{N_r} (x_i)(SII_i)$$

where N_r is the number of lines covered by the region, x is the portion of the line inside the region and SII is the steady-state instability index of the system when experiencing a second contingency involving line i and the line protected by the relay in question.

4.3.2 Transient instability index

In addition to the steady-state stability, the transient stability issue is also studied. As in the case of the steady-state stability, the stability of the power system under transient conditions can be determined in a straightforward manner using conventional methods. In this case, the swing equations of all machines in the system are solved directly in time domain. Then, the swing curve of each machine is examined whether the angle of the machine will increase without bound or it will reach a maximum and the decrease. In the latter case, the machine is said to be stable. If all the machines in the system are stable, the power system is said to be stable.

The objections to this method are similar to those in the steady-state case. It is time-consuming and does not give a transient stability margin or vulnerable

Table 4.16 Steady-state vulnerability index of some relays with Type 1 vulnerability region

Relay		Region of vulnerability	Vulnerability index
x	y		
1	2	0.0205	0.1230
1	30	0.0125	0.0750
2	1	0.0466	0.1229
2	3	0.0151	0.0553
2	25	0.0086	0.0280
3	2	0.0151	0.0549
3	4	0.0213	0.0712
3	18	0.0133	0.0451
4	3	0.0213	0.0691
4	5	0.0128	0.0422
4	14	0.0129	0.0450
5	4	0.0166	0.0503
5	6	0.0026	0.0082
6	5	0.0026	0.0102
7	6	0.0046	0.0276
7	8	0.0023	0.0138
8	7	0.0046	0.0188
9	8	0.0181	0.0786
9	30	0.0125	0.0750
10	11	0.0022	0.0132
10	13	0.0022	0.0132
11	6	0.0041	0.0136
11	10	0.0022	0.0073
13	10	0.0022	0.0063

Note: x and y are the local and remote buses of the relay, respectively.

level of the power system following some contingencies.

The solution to these problems for a two-machine power system is the well known equal-area criterion [10]. In this method, the transient stability of the power system can be determined without solving the swing equations in time domain. Instead, it can be found graphically. Furthermore, the transient stability margin is also available. An extension of the equal-area criterion (EEAC), called extended equal-area criterion, has been developed by a group of researchers [3,4] who apply it to determine the transient stability of multimachine power systems.

The EEAC and the transient stability studies, in general, are typically used to determine the critical clearing time. In a typical transient stability problem, there are three stages that a power system goes through: pre-fault, fault, and post-fault stages. In this study, however, the critical clearing time is not of interest to us; we are, instead, concerned with the transient stability of the power system when two transmission lines are dropped in a second contingency as in the previous section. One of the lines is dropped due to the fault clearing and the other due to a misoperation of a relay with a hidden failure. However, it is assumed that the protection systems for transmission lines are extremely fast, both lines being removed immediately at the fault inception. This assumption transforms the study into a switching operation where one or more transmission lines are lost, and only pre-fault or base case and post-fault or contingency stages are involved.

Since the classical equal-area criterion can be used to determine the transient stability for switching operations or losses of line of the one-machine-infinite bus (OMIB) system, the EEAC, which is said to be acceptably accurate for the determination of the critical clearing time in transient stability of a multimachine power system, should also be able to handle the determination of transient stability resulting from the switching operations of the multimachine power system. The system would be regarded as stable if the stability margin computed following the procedures in the EEAC is positive. The stability margin can also be used to determine the relative vulnerable level of the region of vulnerability of relaying systems. The EEAC procedures for the typical transient stability study for each outage or disturbance are as follows:

1. Decompose the system into two clusters, namely the critical cluster and the remaining cluster.
2. Transform the two clusters into two equivalent machines using their centers of angle reference frames.
3. Transform the two-machine system into the OMIB system.
4. Apply the equal-area criterion to the OMIB system to determine the critical clearing angle and the transient stability margin.
5. Apply truncated Taylor series to find the critical clearing time corresponding to the critical clearing angle in step 4.

Since each disturbance in an n-machine system permits $2^n - 1$ possible ways of decomposing the system into two clusters, the inventors of the EEAC suggest that the initial accelerations of the machines should be used to decompose the system in an efficient way. First, the list of the machines is drawn in descending order of their initial accelerations. Then, starting at the top of the list,

each machine is added to the critical cluster one-by-one. This reduces the number of the candidate critical clusters to n-1. For each candidate critical cluster, we compute its critical clearing time. Finally, the actual critical cluster is the one having the smallest critical clearing time.

As mentioned earlier, in a switching operation, the critical clearing time is not a concern, and the stability margin is the only criterion to determine system stability in the equal-area-criterion. Consequently, it is assumed that in the application of the EEAC to the switching operation the actual critical cluster is the one having the smallest stability margin.

In the first step, the power system is divided into two groups: the critical and remaining groups, designated S and A, respectively. From the conservation of mass and the center of mass in physics:

$$M_s = \sum_{i \in S} M_i$$

$$M_s \, \delta_s = \sum_{i \in S} M_i \delta_i \qquad (4.1)$$

where M_s and M_i are the inertia of the critical group and generator i, respectively. δ_s is the center of angle of group S and δ_i is the torque angle of generator i. Therefore,

$$\delta_s = \frac{\sum_{i \in S} M_i \delta_i}{\sum_{i \in S} M_i}$$

Similarly, for the remaining group,

$$M_a = \sum_{j \in A} M_j$$

$$\delta_a = \frac{\sum_{j \in A} M_i \delta_i}{\sum_{j \in A} M_i}$$

The dynamic equation governing each machine and the equivalent machine and its center of angle is

$$M_k \ddot{\delta}_k = P_{mk} - P_{ek} \tag{4.2}$$

where P_{mk} and P_{ek} are the mechanical power input and the electrical power output of the machine, respectively. From (4.1) and (4.2) one can write,

$$M_s \ddot{\delta}_s = \sum_{i \in S} M_i \ddot{\delta}_i$$

and

$$M_s \ddot{\delta}_s = \sum_{i \in S} [P_{mi} - P_{ei}] = P_{ms} - P_{es} \tag{4.3}$$

where $P_{ms} = \sum_{i \in S} P_{mi}$, the total mechanical input to all machines in group S and $P_{es} = \sum_{i \in S} P_{ei}$, the total electrical output in group S. Similarly, for group A,

$$M_a \ddot{\delta}_a = P_{ma} - P_{ea} \tag{4.4}$$

where $P_{ma} = \sum_{j \in A} P_{mj}$ and $P_{ea} = \sum_{j \in A} P_{ej}$. The two equivalent machines S and A swing against each other. The next step is to transform the two-machine system

into the OMIB system. Rearranging (4.3) and (4.4) and multiplying both by $M_a M_s / (M_a + M_s)$ yields,

$$\left[\frac{M_a M_s}{M_a + M_s}\right]\ddot{\delta}_a = \frac{M_s P_{ma}}{M_a + M_s} - \frac{M_s P_{ea}}{M_a + M_s} \tag{4.5}$$

$$\left[\frac{M_a M_s}{M_a + M_s}\right]\ddot{\delta}_s = \frac{M_a P_{ms}}{M_a + M_s} - \frac{M_a P_{es}}{M_a + M_s} \tag{4.6}$$

Subtracting (4.5) from (4.6) results in,

$$\left[\frac{M_a M_s}{M_a + M_s}\right]\left(\ddot{\delta}_s - \ddot{\delta}_a\right) = \left[\frac{M_a P_{ms}}{M_a + M_s} - \frac{M_s P_{ma}}{M_a + M_s}\right] - \left[\frac{M_a P_{es}}{M_a + M_s} - \frac{M_s P_{ea}}{M_a + M_s}\right]$$

or in the OMIB system,

$$M\ddot{\delta} = P_m - P_e \tag{4.7}$$

where

$$M = \frac{M_a M_s}{M_a + M_s}$$
$$\delta = \delta_s - \delta_a$$
$$P_m = (M_a P_{ms} - M_s P_{ma}) / (M_a + M_s)$$
$$P_e = (M_a P_{es} - M_s P_{ea}) / (M_a + M_s)$$

To find P_e in (4.7), we start with the real power equation for each machine i and j where $i \in S$ and $j \in A$:

$$P_{ei} = P_i = E_i^2 G_{ii} + \sum_{i \neq k} E_i E_k Y_{ik} \cos(\delta_i - \delta_k - \theta_{ik}) \tag{4.8}$$

$$P_{ej} = P_j = E_j^2 G_{jj} + \sum_{j \neq k} E_j E_k Y_{jk} \cos(\delta_j - \delta_k - \theta_{jk}) \tag{4.9}$$

Using the assumption that all the machine angles in each group are equal to the corresponding center of angle results in:

$$P_i = E_i^2 G_{ii} + E_i \left[\sum_{\substack{k \in S \\ k \neq i}} E_k Y_{ik} \cos\theta_{ik} \right] + E_i \left[\sum_{j \in A} E_j Y_{ij} \cos\left(\delta_s - \delta_a - \theta_{ij}\right) \right]$$

Substituting $\overline{Y}_{ik} = G_{ik} + jB_{ik} = Y_{ik}\angle\theta_{ik}$ into the above equation,

$$\begin{aligned} P_i &= \sum_{k \in S} E_i E_k Y_{ik} \cos\theta_{ik} + E_i \sum_{j \in A} E_j Y_{ij} \cos\left(\delta_s - \delta_a - \theta_{ij}\right) \\ &= \sum_{k \in S} E_i E_k G_{ik} + E_i \sum_{j \in A} E_j Y_{ij} \cos\left(\delta_s - \delta_a - \theta_{ij}\right) \end{aligned}$$

Similarly, for the machines in group S,

$$P_j = E_j^2 G_{jj} + E_j \left[\sum_{\substack{l \in A \\ l \neq j}} E_l Y_{jl} \cos\theta_{jl} \right] + E_j \left[\sum_{i \in S} E_i Y_{ji} \cos\left(\delta_a - \delta_s - \theta_{ji}\right) \right]$$

$$P_j = \sum_{l \in A} E_j E_l G_{jl} + E_j \sum_{i \in S} E_i Y_{ji} \cos\left(\delta_a - \delta_s - \theta_{ji}\right)$$

Since $\delta = \delta_s - \delta_a$, P_e in (4.7) can be written as

$$\begin{aligned} P_e &= \left(\frac{M_a}{M}\right) P_{es} - \left(\frac{M_s}{M}\right) P_{ea} \\ &= \frac{1}{M}\left(M_a \sum_{i \in S} P_{ei} - M_s \sum_{j \in A} P_{ej} \right) \end{aligned}$$

Each term on the right-hand side is equal to,

$$M_a \sum_{i \in S} P_{ei} = M_a \sum_{i \in S} \left[\sum_{k \in S} E_i E_k G_{ik} + E_i \sum_{j \in A} E_j Y_{ij} \cos\left(\delta_s - \delta_a - \theta_{ij}\right) \right]$$

$$= M_a \left[\sum_{i \in S} \sum_{k \in S} E_i E_k G_{ik} + \sum_{i \in S} \sum_{j \in A} E_i E_j Y_{ij} \cos\left(\delta_s - \delta_a - \theta_{ij}\right) \right] \tag{4.10}$$

$$M_s \sum_{j \in A} P_{ej} = M_s \sum_{j \in A} \left[\sum_{l \in A} E_j E_l G_{jl} + E_j \sum_{i \in S} E_i Y_{ji} \cos\left(\delta_a - \delta_s - \theta_{ji}\right) \right]$$

$$= M_s \left[\sum_{j \in A} \sum_{l \in A} E_j E_l G_{jl} + \sum_{i \in S} \sum_{j \in A} E_i E_j Y_{ji} \cos\left(\delta_a - \delta_s - \theta_{ji}\right) \right] \tag{4.11}$$

First terms in both (4.10) and (4.11) are constant and designated,

$$P_c = \frac{1}{M} \left(M_a \sum_{i \in S} \sum_{k \in S} E_i E_k G_{ik} - M_s \sum_{j \in A} \sum_{l \in A} E_j E_l G_{jl} \right)$$

$$= \frac{1}{M} \left(M_a \sum_{i \in S} \sum_{j \in A} E_i E_j Y_{ij} \cos\left(\delta - \theta_{ij}\right) - M_s \sum_{i \in S} \sum_{j \in A} E_i E_j Y_{ji} \cos\left(\delta + \theta_{ji}\right) \right)$$

$$= \frac{1}{M} \left[\left(M_a - M_s\right) \sum_{i \in S} \sum_{j \in A} E_i E_j G_{ij} \cos\delta + \left(M_a + M_s\right) \sum_{i \in S} \sum_{j \in A} E_i E_j B_{ij} \sin\delta \right]$$

$$= C\cos\delta + D\sin\delta$$
$$= \sqrt{C^2 + D^2}\,\sin(\delta - \gamma)$$
$$= P_{max}\,\sin(\delta - \gamma)$$

In conclusions,

$$M\ddot{\delta} = P_M - (P_c + P_{max}\,\sin(\delta - \gamma))$$

which can be used to plot two swing curves for the base case, P, and contingency switching, D, as shown in Figure 4.5. The system is said to be stable if the stability margin, equal to the accelerating area minus decelerating area, is positive.

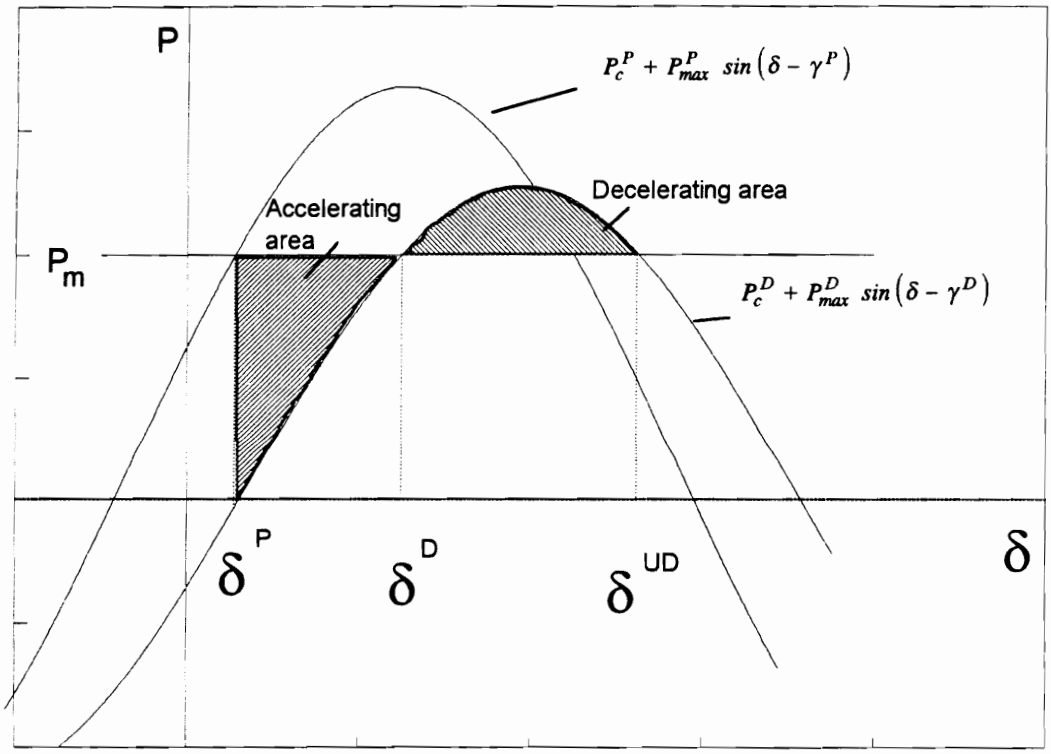

Figure 4.5 Extended equal area criteria for switching operation.

Thirty-five cases of second contingencies have been studied using the EEAC. The time-domain solutions for those thirty-five cases predict the system to be stable. These results are in agreement with the solutions from the EEAC. In all thirty-five cases, the stability margins are positive regardless of how we decompose the system. A problem arises, however, if the actual critical cluster has to be identified, since in sixteen cases, the critical cluster that gives the minimum stability margin does not belong to the candidate critical clusters identified by the initial acceleration criterion.

As the system load increases, the performance of the EEAC becomes more unsatisfactory. To simulate a heavy loading situation, the load and generation at all the buses are multiplied by two. In the heavy loading situation, it becomes more evident that the application of the initial acceleration criterion to the decomposition of the system does not work satisfactorily. For some contingencies, all or some of the candidate critical clusters using the initial acceleration yield the following:

1. There is no load flow solution to the base case and/or contingency in the OMIB equivalent system while the original system does. This happens to nineteen cases.
2. If δ_o is the stable equilibrium point of the angle of the internal emf of the equivalent machine in the OMIB for the base case and δ_d is for the contingency, $\delta_d < \delta_o$ while it is expected otherwise. Fourteen cases experience this problem. Figure 4.6 shows an example of this situation.

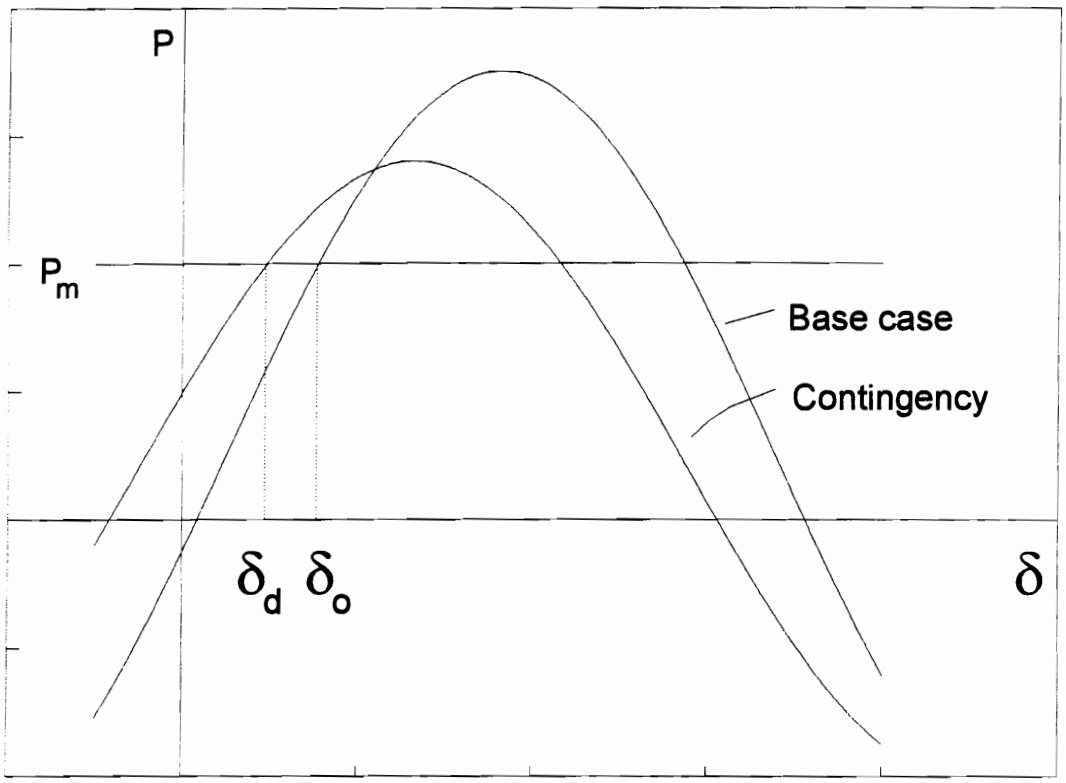

Figure 4.6 Stable equilibria for the base case and contingency in the EEAC OMIB equivalent when $\delta_d < \delta_o$

3. Positive stability margin or transient stable while the time-domain solution is unstable. This optimistic stability prediction occurs in twenty-two cases.

For those cases in (3), some critical clusters other than the ones obtained from the initial acceleration criteria, however, produce a better solution and result in system instability that agrees with the time-domain solution. Yet there are twelve cases where no matter what the critical cluster is, the application of the EEAC always incorrectly predicts the stability of the system. In all, but one, such cases the EEAC tends to be optimistic.

The overall performance of the EEAC is obviously very unreliable. The correct stability prediction, if there is one, depends largely on how the power system is separated into two groups as assumed by the method. With different groupings, the stability prediction can be totally different and disagree with the time-domain solution, rendering the method unusable. The difficulties of this method may lie in the fundamental assumption of the method that the power system is split into two groups following some disturbances.

The difficulty in extracting a correct stability prediction from the EEAC makes the issue of acquiring the stability margin beyond discussions since the prediction is made by inspecting the sign of the margin. Other direct methods [5,14] also suffer from some difficulties of their own. Some methods, which require that a certain condition must be met for the methods to work satisfactory, give incorrect results should the condition is not satisfied.

Without a reliable method that can produce the stability margin, the transient stability problem can only be solved by the typical time-domain solution. In such situation, the relative instability or vulnerable level of the power system is not available. The power system can only be said to be stable or unstable. In the former, the instability index equal to 0 is assigned, while in the latter 1 is assumed. Consequently, the vulnerability index of each region of vulnerability is the summation of the portion of the lines inside the region and causing the system to go unstable. Table 4.17 lists the transient vulnerability index of some relays with hidden failures causing Type 1 vulnerability region.

Each relay with a hidden failure will now have a region of vulnerability and a vulnerability index attached. A relatively large value of vulnerability index indicates that the possibility that the hidden failure inside the relay will be exposed is high. Furthermore, if the failure is exposed, the power system will be affected severely by the relay misoperations. Therefore, relays having a large value of vulnerability index should be monitored and controlled to eliminate any possible hidden failures.

In the research project [13], a computer-based monitoring and control system as shown in Figure 4.7 is proposed. It can be installed in a substation to monitor and control vulnerable relays. The system, called the Hidden Failure Monitoring and Control System (HFMCS), will have the same input signals as those of the relay being supervised. The outputs from the HFMCS and the ones

from the relay are connected in an appropriate logical manner to provide greater security of the overall protection system. This system will obviously suit digital relays very well. Any hidden failures in the digital relays can be easily detected by the HFMCS. Furthermore, the adaptive ability of the digital relays can enhance the performance of the HFMCS since the relaying setting and logic can be adaptable to the prevailing system conditions.

Table 4.17 Transient vulnerability index of some relays with Type 1 vulnerability region

Relay		Region of vulnerability	Vulnerability index
x	y		
1	2	0.0205	0.0205
1	30	0.0125	0.0125
2	1	0.0466	0.0205
2	3	0.0151	0.0151
2	25	0.0086	0.0043
3	2	0.0151	0.0151
3	4	0.0213	0.0106
3	18	0.0133	0.0066
4	3	0.0213	0.0213
4	5	0.0128	0.0128
4	14	0.0129	0.0129
5	4	0.0166	0.0038
5	6	0.0026	0.0000
6	5	0.0026	0.0013
7	6	0.0046	0.0046
7	8	0.0023	0.0023
8	7	0.0046	0.0046
9	8	0.0181	0.0181
9	30	0.0125	0.0125
10	11	0.0022	0.0022
10	13	0.0022	0.0022
11	6	0.0041	0.0000
11	10	0.0022	0.0000
13	10	0.0022	0.0000

Note: x and y are the local and remote buses of the relay, respectively.

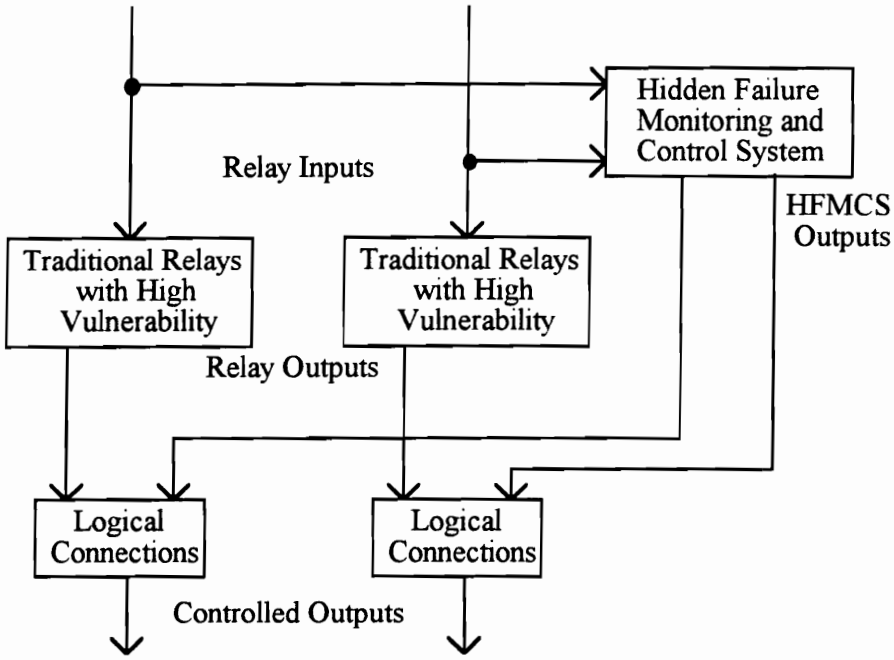

Figure 4.7 The Hidden Failure Monitoring and Control System

Chapter 5. Conclusions

In this research, the concept of a type of relay failure, called hidden failure, is established. It is the failure that has a potential to remain latent until being exposed by some abnormal power system states. The effects of relay misoperations due to the hidden failure on the power system can be very severe since the system may already be in a stressful condition.

The importance of relay hidden defects on power system disturbances is also found through the analysis of disturbance reports and industry surveys. Approximately, 70% of the reported disturbances have relay failures as their contributing factors. Commonly used relaying schemes are analyzed so that the mechanism and consequences of any possible hidden failures inherent in the relaying systems can be understood.

The concept of region of vulnerability of a hidden failure mode of a protection system is introduced. A computational method to quantify the vulnerability region is also developed. Relay settings usually dictate the size of the region where an abnormal system state can trigger the hidden failure to incorrectly operate the relay. The relative importance or vulnerable level of each region is measured by a number called vulnerability index. The index can be computed considering the vulnerability region and any contingencies that may occur inside the region. It may tie to some performance measurements of the system. In this study, steady-state and transient stability has been used for vulnerability index calculations. A sample power system with its protection system stipulated has been used in the study for the finding of both region of vulnerability and the vulnerability index. The techniques developed here are effective on the representative power system. It would be useful to verify that they are as effective on a larger power system.

Relays with large index should be monitored and controlled so that the occurrence of hidden failures can be prevented. A monitoring and control system called, the Hidden Failure Monitoring and Control System is developed in the research project. It can be installed in substation to control vulnerable relays and prevent them from causing major power system cascading outages.

Bibliography

1. A report to the President by the Federal Power Commission, "North Power Failure, November 9-10, 1965", U.S. Government Printing Office, Washington, 1965.

2. "NERC Disturbance Reports", North American Electric Reliability Council, New Jersey, 1984-1991.

3. Y. Xue, Th. Van Cutsem, and M. Ribbens-Pavella, "A Direct Method for Fast Transient Stability Assessment of Large Power Systems", IEEE Trans. on Power Systems, Vol. 3, No. 2, May 1988, pp. 400-412.

4. Y. Xue et al., "Extended Equal Area Criterion Revisited", IEEE Trans. on Power Systems, Vol. 7, No. 3, August 1992, pp. 1012-1022

5. H.D. Chiang, F.F. Wu and P.P. Varaiya, "A BCU Method for Direct Analysis of Power System Transient Stability", Paper No. 91 SM 423-4 PWRS, presented at the 1991 IEEE Summer Meeting, July 28-August 1, San Diego, California

6. Westinghouse, "Applied Protective Relaying", Westinghouse Electric Corporation, Relay-Instrument Division, Coral Springs, Florida, 1982.

7. J.L. Blackburn, "Protective Relaying", Marcel Dekker, Inc., New York, 1987.

8. C.R. Mason, "The Art and Science of Protective Relaying", John Wiley & Sons, Inc., New York, 1956.

9. S.H. Horowitz and A.G. Phadke, "Power System Relaying", Research Studies Press, Ltd., London, and John Wiley & Sons, New York, 1992.

10. W.D. Stevenson, Jr., "Elements of Power System Analysis", Fourth Edition, McGraw-Hill Book Company, New York, 1982.

11. W.F. Tinney and C.E. Hart, "Power Flow Solution by Newton's Method", IEEE Trans. Power Apparatus and Systems, Vol. PAS-86, November 1986, pp. 1449-1460.

12. B. Stott and O. Alsac, "Fast Decoupled Load Flow", IEEE Trans. Power Apparatus and Systems, Vol. PAS-73, May/June 1974, pp. 859-869.

13. A.G. Phadke et al., "Anatomy of Power System Blackouts and Preventive Strategies by Rational Supervision and Control of Protection Systems", ORNL/Sub/19X-SD630C/1, prepared by Virginia Polytechnic Institute and State University for Oak Ridge National Laboratory, Martin Marietta Energy Systems, Inc., Oak Ridge, Tennessee, 1993.

14. M.A. Pai, "Energy Function Analysis for Power System Stability", Kluwer, Boston, 1989.

15. S.H. Horowitz, "Protective Relaying for Power Systems", IEEE Press, The Institute of Electrical and Electronics Engineers, New York, 1980.

16. S.H. Horowitz, "Protective Relaying for Power Systems", Vol. II, IEEE Press, The Institute of Electrical and Electronics Engineers, New York, 1992

17. G.D. Irisarri and A.M. Sasson, "An Automatic Contingency Selection Method for On-line Security Analysis", IEEE Trans. on Power Apparatus and Systems, Vol. PAS-100, No. 4, April 1981, pp. 1838-1844.

18. B. Stott, O. Alsac and F.L. Alvarado, "Analytical and Computational Improvements in Performance-index Ranking Algorithms for Networks",

International Journal of Electrical Power and Energy Systems, Vol. 7, No. 3, July 1985, pp. 154-160.

19. V. Brandwajn, "Efficient Bounding Method for Linear Contingency Analysis", IEEE Trans. on Power Systems, Vol. 3, No. 1, February 1988, pp. 38-43.

20. H. Limmer, "Techniques and Applications of Security Calculations Applied to Dispatching Computers", Papers STY 4, 3rd Power System Computation Conference, Rome, Italy, 1969.

21. M. Baughman, F.C. Schweppe, "Contingency Evaluation: Real Power Flows from a Linear Model", IEEE Summer Power Meeting, 1970, Paper CP 689-PWR.

22. F.F. Wu, "Real-time Network Security Monitoring, Assessment and Optimization", International Journal of Electrical Power and Energy Systems, Vol. 10, No. 2, April 1988, pp. 83-100.

Appendix. Industry Survey Questionnaire

1. System Load (MW)_____

2. Please give a short description of the incident. If you have a written description for other purpose a copy would be appreciated.

3. Describe the configuration OF the system involved. (Attach a sketch if possible)

4. Describe the relay or relay system that operated incorrectly.

5. Check your evaluation of the relay performance as described below:

Correct and Appropriate

Correct but Inappropriate

Incorrect but Appropriate

Incorrect and Inappropriate

6. The underlying basis for the relay misoperatioN was error in

Application

Maintenance

Setting

Calibration

Transient

Other

7. Describe any corrective action you fell would have prevented this operation

8. If needed, would you be willing to answer some follow-up clarifying question on the telephone?

If yes, please give phone number, and preferred time of day when might be reached

NAME :_____

COMPANY AFFILIATION :_____

ADDRESS :_____

PHONE : (_____)_____

Vita

Surachet Tamronglak was born on July 22, 1962 in Bangkok Thailand. He attended King Mongkut's Institute of Technology - Ladkrabang where he received a Bachelor of Engineering degree in Electrical Engineering in 1985. After two years of employment at Metropolitan Electricity Authority in Bangkok, Thailand, he joined the Department of Electrical Engineering, Virginia Polytechnic Institute and State University as a graduate student in September 1987 and received his Master of Science degree in Electrical Engineering in July 1989. He was a Teaching and Research Assistant in the department from August 1988 to May 1993. From May 1993 to January 1994, he worked as a consultant engineer for Asea Brown Boveri - Transmission Technology Institute.