Optimizing Weed Management via Microwave Irradiation

Aman Rana

Dissertation submitted to the faculty of the Virginia Polytechnic Institute and State
University in partial fulfillment of the requirements for the degree of

Doctor of Philosophy

In

Plant Pathology, Physiology and Weed Science

Jeffrey F. Derr

Shawn D. Askew

Edward S. Hagood

Parameswaran K. Mallikaarjunan

Robert D. Grisso

July 10, 2015

Blacksburg, Virginia

Keywords: Bermudagrass, microwave radiation, nonchemical weed control,
thermal weed control, postemergence, ambient temperature, plant age, selectivity

Optimizing Weed Management via Microwave Irradiation

Aman Rana

ABSTRACT

One potential alternative to chemical weed control is the use of microwave radiation, a particular form of indirect thermal weeding. Absorption of microwave radiation causes water molecules within the tissue to oscillate, thereby converting electromagnetic energy into heat. This technique is rapid, versatile and effective, as the electromagnetic waves heat the plant tissue and destroy cellular integrity. The objective of this research was to evaluate the potential use of dielectric heating for weed management. Ten weed species representing monocots and dicots were selected for this study: southern crabgrass, dallisgrass, yellow nutsedge, fragrant flatsedge, false green kyllinga, common ragweed, field bindweed, henbit, white clover, and pitted morningglory. There was a lag or warm up period between energizing the magnetron and actual microwave radiation production. To eliminate the gap between electric power supplied to magnetron and actual microwave radiation produced, a conveyer was used. Overall injury to grasses, sedges and broadleaf weeds was higher at each dose when weeds were treated by microwave radiation while moving on a conveyer in comparison to being stationary. Grasses showed slightly more tolerance to microwave treatments in comparison to broadleaf weeds. Older weeds (8 to 10 weeks old) showed more tolerance to microwave treatments in comparison to younger weed plants (4 to 6 weeks old). Microwave radiation was able to control a range of weed species, although larger weeds were more likely to regrow after treatment. Ambient temperature had a significant effect on injuries caused by microwave radiation to target weeds, with control increasing as the air temperature increased. Weed control using microwave radiation required more energy when weeds were treated at 13 C compared to 35 C. More energy was needed at lower air temperatures to raise the plant canopy temperature from ambient levels to beyond the biological limit. Microwave radiation at lower doses caused greater injury to common chickweed and yellow woodsorrel than bermudagrass, suggesting the potential for selective weed control in certain situations. A custom built microwave applicator provided similar control of emerged weeds as the contact herbicides diquat and acetic acid.

ACKNOWLEDGEMENTS

I would never have been able to finish my dissertation without the guidance of my committee members, help from friends, and support from my family. I would like to express my deepest gratitude to my advisor, Dr. Jeffrey F. Derr, for his excellent guidance, caring, patiently corrected my writing and financially supported my research and providing me with an excellent atmosphere for doing research. I would like to express my sincere gratitude to the members of my graduate committee, Dr. Shawn D. Askew, Dr. Edward S. Hagood, Dr. Parameswaran K. Mallikaarjunan, and Dr. Robert D. Grisso, for their guidance and support throughout my doctoral program. The personnel of Virginia Tech’s Hampton Roads Agricultural Research and Extension Center have been exceptional in their help with my research. I am appreciative to Dr. Laurie Fox, Mr. Adam Nichols, Ms. Jillian Rajevich, Mr. Tommy Taylor, Mr. Alfredo Smith and Mr. Thomas Wilchynski. The assistance was always appreciated and undoubtedly necessary for the progress of my research at an off-campus facility. I am thankful for Dr. Jim Owen’s expertise in statistics, and use of his guidance and expertise in the field of research was never taken for granted and always appreciated. It was a privilege to work at the Hampton Roads Agricultural Research and Extension Center. I would like to express my sincere gratitude to Dr. Graham Ian Brodie and Dr. Ron Hutcheon for their guidance and support.

I thank my parents for their faith in me and allowing me to be as ambitious as I wanted. It was under their watchful eye that I gained so much drive and an ability to tackle challenges head on. They were always supporting me and encouraging me with their best wishes. Finally, I would like to thank my wife, Seema Rani and my daughter Muskaan Rana. They were always there cheering me up and stood by me through the good times and bad.

Table of Contents

Chapter 1. Determining the microwave irradiation level needed for weed control using a stationary versus a mobile microwave applicator.

Chapter 5. Development of a prototype microwave applicator and its use for weed management in the field.

LIST OF FIGURES

Chapter 3. Effect of ambient temperature on thermal weed control using microwave radiation……………………………………………….. 84

Chapter 4. Exploring the basis of selectivity using microwave radiation for weed management……………………………………….. 105

Chapter 5. Development of a prototype microwave applicator and its use for weed management in the field…… 130

LIST OF TABLES

Optimizing Weed Management via Microwave Irradiation

Introduction

The search for solutions to control undesired vegetation has led to the development of diverse methods. The main objective of weed control in cropping systems is to prevent competition with the desired crop (Brown et al. 1957; Davis et al. 1971, Menges and Wayland 1974). Controlling undesirable weeds lowers the risk of crop production losses in terms of both quantity and quality. Chemical control has been the primary method to control weeds in the last 50 years due to its high efficiency (Nelson 1996). Herbicides have the biggest share (68%) in the pesticide market followed by fungicides (9%) and insecticides (3.2%) [NASS 2006]. Approximately, 113,398 metric tons of herbicide active ingredients (ai) are sold yearly in the United States. The use of pesticides has raised questions on potential adverse impacts to the environment. These concerns occur in part because some chemicals leave residues with long persistence, adversely affecting subsequent crops (Morozov et al. 1999). Chemical control practices may adversely impact human health and sustainability, especially, in undeveloped and developing countries where the regulatory system is impaired. There is a demand for alternatives to chemical control, especially among those interested in organic approaches. The search for alternatives to chemical weed control is an important challenge for research. The use of thermal methods appears to be a good alternative because they do not produce chemical residues in the environment (Nelson 1985; Olsen and Hammer 1982).

Thermal weed control methods can be divided in two groups according to their mode of action: (a) direct heating methods using flame, infrared, hot water, steaming, or hot air and (b) indirect heating methods which includes electrocution, microwaves, lasers and ultraviolet radiation. Flame-based direct thermal weed control involves the use of equipment to create direct contact between the flame and the plant. This technique kills weeds by rupturing plant cells when the sap rapidly expands in the cells, along with burning of the weed foliage. However, flaming may damage the crop. Flaming for weed control may prove cheaper than hand weeding. Hot water treatment uses water as a carrier to transfer heat energy to unwanted vegetation. Significant transmission losses are involved with this approach for weed control. Use of infrared systems are a further development of flame weeding in which burners heat ceramic or metal surfaces to generate infrared radiation directed at target weeds. Electrocution involves passing high voltage through weeds. Lasers deliver a high level of radiant energy directly to weeds. Direct thermal methods of weed control have disadvantages that have prevented their general application in field conditions. Some have not been developed further because of their low efficiency, higher operating costs or low work capacity, such as hot water treatments for weed control. It is difficult to compare the effect of different thermal methods because of the wide range of equipment used in experiments with varying doses and weed control levels. Important information on equipment or doses is lacking in many cases (Ascard 1998).

One potential alternative is the use of microwave radiation, a particular form of indirect thermal weed control. The use of microwave energy has been proposed frequently as an alternative method for controlling pests such as weeds, insects, and soil borne plant pathogens. This dielectric heating has been exploited to kill emerged weeds, seed (Barker & Craker 1991; Davis et al. 1971; Sartorato et al. 2006), and insects (Nelson 1996). Several related studies indicate plant developmental stage at the time of treatment is an important factor for weed control (Ascard 1994, 1998; Casini et al. 1993; Daar 1994; Hansson & Ascard 2002; Parish 1989, 1990). Treatment at an early developmental stage reduce input energy requirements and lowered the operational cost. Few researchers have investigated the effects of microwave radiation on seed, plants and other soil organisms. Dielectric heating depends on the power density of the microwave radiation and the electrical properties of the targets. Factors such as size of seed and plants, shape, and moisture content are important, as are the properties of the soil. Microwave radiation penetrates the soil to a depth of several centimeters depending upon the applied power, its wavelength, and the composition and moisture content of the soil. Microwave power could reach many weed seed in the upper soil strata and effectively control them as if they were on the surface. Microwaves can be effective in killing plants and can also be used to control weed seed that are buried several centimeters deep in soil, although high power and a longer irradiation period is needed for treated soil. Regardless, microwave treatment may prove better than flame guns, which are not effective for controlling weed seed of species that can withstand high temperatures (Sampson and Parker 1930).

Magnetron

A magnetron is a device that utilizes electrical and magnetic currents to create electromagnetic energy. The electromagnetic energy can travel at the speed of light and is the same type of energy used for communication purposes. A magnetron has a filament in the center which heats when exposed to a slight amount of voltage. The filament gives off electrons as it becomes hotter. These electrons move outward in search of positive anodes, or electrodes, but they come in contact with a magnetic field along the way. The magnetic field within the magnetron repels the electrons. As a result, they become confined and begin rotating in circles known as an electron cloud. This accumulation of electrons supplies energy strong enough to quickly warm dielectric material upon microwave irradiation. A magnetron typically provides approximately 800 to 1,200 W into a matched load at 2.45 GHz. It operates at 4 kV and

0.3 A average current as driven typically by unfiltered double supplies. Energy efficiency of a typical magnetron ranges between 50 to 70% (Banga et al. 1999; Sunberg et al. 1996; Van Rienen and Weiland 1985).

Mode of action

Microwave radiations contains electromagnetic waves with frequencies ranging from about 300 MHz to 300 GHz and corresponding wavelengths from 0.001 to 1 m (Decareau 1985). Microwave heating is based on the transformation of alternating electromagnetic field energy into thermal energy by affecting polar molecules of a material. Microwave radiations are in the central portion of the non-ionizing region of the electromagnetic spectrum. The ability of microwave radiation to penetrate and couple with polar molecules such as water provides an excellent means of obtaining controlled and precise heating of undesired plants. Absorption of microwave radiation causes water molecules within the tissue to oscillate, thereby converting electromagnetic energy into heat. Microwave-based weed control methods work via a systematic increase of temperature due to dielectric heating (Barker and Craker 1991; Diprose et al. 1984; Fujiwara et al. 1983). This technique is rapid, versatile and effective, as the electromagnetic waves heat the plant tissue and destroy cellular integrity. The most important characteristic of microwave heating is that materials absorb microwave energy directly and internally and convert it into heat (Mullin 1995). Since this heating depends upon the dielectric properties of the targeted material, there is a possibility of advantageous selective heating in mixtures of different plant species based on anatomy and age, for example. Microwave radiation stimulate water molecules into resonance and the friction between adjacent molecules produces heat. When the ground is radiated with microwaves, water that exists in soil pores or organic matter therefore is heated exclusively (Krasewski and Nelson 1995; Menges and Wayland 1974).

Studies with soil samples containing added microorganisms showed that exposures of small samples in a microwave oven could be useful for sterilization, but that results depended on treatment time, amount of soil treated, and soil water content (Ferriss 1984). Microwave energy treatments of different soils were effective in controlling several plant pathogens, but penetration depths were reduced as soil moisture content increased (Van Assche and Uyttebroek 1983). Other tests by Van Wambeke et al. (1983) and Benz et al. (1984) showed that, for soil samples treated in a microwave oven, weed seed, fungi, and nematodes could all be controlled by exposures of a few minutes, but that required exposures depended on soil type, depth in soil, and soil moisture content. Work by Baker and Fuller (1969) with a 2.45 GHz microwave revealed large differences in the heating rates of soils and problems with uniformity of treatment. Vela et al. (1976) reported, after conducting both laboratory and field studies, that soil microorganisms survived 2.45 GHz exposures at much higher dosage levels than those required for control of weed seed in soil. Several studies demonstrated the inefficiency of microwave treatments for the elimination of pathogenic microorganisms in the field (Vela´zquez-Martı´ et al. 2003; Vela´zquez-Martı´ and Gracia-Lo´ pez 2005a). Their investigations have determined the radiation effect and the necessary energy for the elimination of microorganisms and seed under diverse laboratory conditions (Barker and Craker 1991; Cavalante and Muchovej 1993; Vela´zquez-Martı´ et al. 2003). The concern regarding the effects of non-ionizing microwave radiation on biological systems are biased significantly towards non-plant organisms (Cleary 1977). Microwaves with a frequency of 2.45 GHz can eliminate *Fusarium oxysporum f.* sp. *melonis* from the utensils and trays used in melon propagation (Soriano et al. 2001). Bhaskara et al. (1998) studied the effect of microwave treatment on quality of wheat seeds infected with *Fusarium graminearum*. Their results showed that eradication of the pathogen increased with increasing microwave energy, but the seed viability and seedling vigor decreased accordingly. However, disinfecting the soil is problematic as a large amount of energy is required (Bhaskara et al. 1998; Lal and Reed 1988; Lozano et al. 1986; Nelson 1996; Rice and Putham 1977). Some authors have been discouraged with respect to the potential benefits of microwave disinfection systems since they found that the efficient removal of pathogens required high energy levels (Lal and Reed 1988; Mavrogianopoulos et al. 2000; Nelson 1996; Rice and Putham 1977).

Control of insect infestations by microwave power has been studied by many researchers (Boulanger et al. 1969; Hamid et al. 1968; Hamid and Boulanger 1969; Nelson 1972; Watters 1976). High frequency radiation may not only kill insects by the dielectric heat induced within them but may also affect the reproduction of survivors (Hamid et al. 1968; Watters 1976). Use of microwave energy to determine the mortality and vulnerability of life stages of various stored-product insects has been reviewed (Halverson et al. 2003; Hamid and Boulanger 1969; Mahroof et al. 2003a, b; Sanchez-Hernandez et al. 2002; Shayesteh and Barthakur 1996; Watters 1976) and results are inconsistent. Shayesteh and Barthakur (1996) used continuous and intermittent application of microwave energy and studied insect behavior during microwave irradiation. Sanchez-Hernandez et al. (2002) designed and built a microwave applicator for rice disinfestations. Halverson et al. (2003) studied the susceptibility of life stages of stored-products insects to determine the least susceptible life stage. Mahroof et al. (2003a) reported that during heat treatment of mills at 50 to 60 C, later instars and pupae of red flour beetle (*Tribolium castaneum*) appeared relatively heat tolerant compared with other life stages. Mahroof et al. (2003b) conducted experiments to study time mortality relationships for life stages of the red flour beetle (*Tribolium castaneum*) at 50 to 60 C. They concluded that young larvae were the most heat tolerant stage. Halverson et al. (2003) reported that eggs are least susceptible and the most vulnerable stage was pupae. Watters (1976) and Shayesteh and Barthakur (1996) determined that eggs are most susceptible to microwave energy followed by pupae, adults, and larvae of red flour beetle (*Tribolium castaneum*). Hamid and Boulanger (1969) concluded that the mortality of larvae was the same as the adult confused flour beetle (*Tribolium confusum*) at different temperatures. Differences in larval and adult susceptibility seem to vary among species (Nelson 1996).

O'Bannon and Good (1971) reported control of root-knot nematode in small samples of potting soil exposed to 2.45 GHz microwave energy in a microwave oven when temperatures (72 C) lethal to the nematodes were achieved. Heald et al. (1974) reported that nematodes were controlled in a fine sandy loam soil infested with the *reniform* nematode at depths of 5 cm, but that the nematodes survived at depths of 10 and 15 cm in field tests with 30 kW, 2.45 GHz microwave sources applying energy at 800 joules cm^{-2}. In contrast, Barker et al. (1972) concluded that 2.45 GHz microwave treatments of nematode-infested soil samples had poor prospects for becoming a practical means of nematode control due to large differences in the heating rates of soils and problems with uniformity of treatment. Research showed that the destruction of pathogenic microorganisms in the field is not practical because the application energy necessary is excessively high in order to obtain an effective disinfection in a superficial layer of not more than 5 to 10 cm. (Vela´zquez-Martı´ and Gracia-Lo´ pez 2005a; Vela´zquez-Martı´ and Gracia-Lo´ pez 2004b; Vela´zquez-Martı´ et al. 2003). This is due to the high microwave attenuation of the soil (Gracia-Lo´pez and Vela´zquez-Martı´ 2002; Vela´zquez-Martı´ et al. 2005b). But the radiation energy necessary for elimination of emerged vegetation can be smaller due to the high water content in their anatomical structures. No attenuation exists in the radiation path from emitters to the organic material of leaves for emerged vegetation.

Therefore, this application has the potential to be competitive compared to application of postemergence herbicides. The elimination of herbaceous species already germinated in the field is technically possible (Velázquez-Martí et al. 2008).

Effectiveness for preemergence weed control

Interest in weed control by soil treatment with microwave energy started in the early 1970s and hope of commercialization stimulated many experiments in the laboratory and in the field on the lethality of such exposures for various kinds of seed. Davis et al. (1971) reported the germination of seed of several crop and weed species after irradiated in a microwave oven operating at 2.45 GHz. Seed were treated in a dry state and after several hours of water imbibition. Imbibed seeds were much more susceptible to damage from microwave radiation than dry seeds. Brodie et al. (2007) reported soil pasteurization with microwaves killed perennial ryegrass seed buried in a fine sandy soil to a depth of 10 cm. The half lethal temperature (T_{50}) was 54 C in wet soil and 77 C in dry soil. Microwave heating was much more effective in moist soil and soils with higher clay content. Wayland et al. (1973) irradiated wheat and radish seeds in paper envelopes 2.5 cm below the soil surface with 2.45 GHz microwave energy from a 1.5 kW magnetron directed at the soil surface through an applicator at a reported level of 210 joules cm^{-2}. They concluded that, for the power levels used, energy density and time needed for microwave irradiation were interchangeable, with respect to effectiveness, as long as total energy remained about the same. In field experiments with a 2.45 GHz power applicator, seed of several weed species were planted in the top 2 cm of irrigated and non-irrigated soils, and control was achieved for various species at energy densities of 180 and 360 joules cm^{-2} (Menges and Wayland 1974).

Olsen (1975) conducted an interesting theoretical analysis, based on physical principles and available data for the necessary properties of soils and seeds, and concluded that for unimbibed seeds in a mineral soil, an energy density of at least 800 joules cm^{-2} would be required for control. In other laboratory tests on wild oats seeds exposed in glass test tubes inserted into the waveguide attached to a 1.5 kW, 2.45 GHz source, moist seed and seed in soil were damaged more than dry seed (Lal and Reed 1988). Vela´zquez-Martı´ et al. (2006) reported inhibition of germination of buried seed in fields requires a higher irradiation period or power, a minimum of 2100 joules s^{-1} cm^{-2}. However, germination inhibition in flowerpots was achieved with small radiation energies of between 60 and 80 joules s^{-1} cm^{-3}.

Effectiveness for postemergence weed control

Urech et al. (1996) used a microwave of 2.45 GHz with intensities of 0.0002, 0.005 and 0.050 joules s^{-1} cm^{-2} on lichens *Parmelia tiliacea* and *Hypogymnia physodes* in field experiments of duration ranging from 1 to 3 years. They noted that both species exhibited reduced growth at the highest intensity, which they contend was due to drying caused by thermal effects. A study by Picazo et al. (1999) found that thistles (*Cynara cardunculus*) and lentils (*Lens culinaris)* decreased in both weight and length during the 3 week continuous microwave irradiation period as compared to a non-treated group. Stem length of lentils subjected to electromagnetic fields increased over the course of the 3 weeks, but that the plants had fewer branches and lower stem and total weight than did the non-treated plants. Murakami et al. (2001) observed slight growth acceleration in birdsrape mustard (*Brassica rapa)* even at the lowest intensity between 0.001 and 0.015 joules s^{-1} cm^{-2} of frequency 2.45 GHz, which they attribute to a slight soil temperature increase. In contrast, Skiles (2006) reported no difference between the control and the microwave-treated alfalfa plants at 2.45 GHz with intensities of 0.0005 to 0.0012 joules s^{-1} cm^{-2}.

Latsch (2010) reported that microwave controlled broadleaf dock (*Rumex obtusifolius*) plants, but the heating time needed and thus the amount of energy required was very high. Field tests of a prototype microwave-based weed killer machine were conducted by Sartorato and his associates in 2006 on pure stands of velvetleaf (*Abutilon theophrasti* Medik.*),* proso millet (*Panicum miliaceum* L.), lucerne (*Medicago sativa* L.) and oilseed rape (*Brassica napus* L.). Lucerne showed no sigmoidal response and was the least affected by the treatment, while a log-logistic curve expressed the dose–response relationships of the other species quite well. The estimated microwave dose for a 90% dry weight reduction ranged from 101.5 joules cm^{-2} in *Abutilon theophrasti* to 343.3 joules cm^{-2} in *Panicum miliaceum*. Wayland et al. (1975) conducted field experiments with a mobile microwave power unit consisting of four 1.5 kW magnetrons powered by a gasoline-engine-driven 60-Hz generator. Preemergence and postemergence microwave treatments were administered to plots seeded with several weed species. Energy doses of 183 joules cm^{-2} were required to provide 80 to 90% control in preemergence tests, while energy doses of 77 to 309 joules cm^{-2} were required in postemergence trials. Cundiff et al. (1974) conducted field experiments with the same microwave equipment for evaluation of weed seed, soil fungi, and nematode control. Treatments on a dry sandy loam soil at energy doses of 633 to 1,727 joules cm^{-2} failed to provide effective control of any of the pest organisms. No significant reductions in the presence of any of these pests resulted from even the highest energy dose microwave treatments. Energy cost evaluation indicated that increased efficiency is required for this technique to compete with other thermal methods. Microwave efficiency could be increased by a flux configuration that minimizes soil penetration while maximizing absorption by plants, which, in turn, depends on plant anatomy (Sartorato et al. 2006).

Advantages

Compared to other conventional thermal methods such as flaming or use of steam, use of microwave radiation has potential advantages including rapid penetration to all plant parts depending upon the frequency used. Being an indirect thermal method, heat is generated inside the plant tissue by water molecules, so there is less chance of fire disasters. In weed control, microwave radiation is not affected by wind, thus extending the application window compared to conventional spraying methods or flaming. Laboratory and field studies have shown that the energy of microwaves can destroy a broad spectrum of soil organisms and weed seed (Bhaskara et al. 1998; Ferriss 1984; Lozano et al. 1986; Mavrogianopoulos et al. 2000; Reddy et al. 1999; Soriano et al. 2001). As the magnetron passes over plants, microwave radiation does not disturb the soil or leave any residues in soil, air or in the crop (Hurlock et al. 1979). Microwave treatment of the ground provides new opportunities that allow higher productivity (Krasewski and Nelson 1995; Mavrogianopoulos et al. 2000).

In spite of these advantages, however, the technology has not been adapted to the agriculture sector due to limited research, safety concerns, and the lack of acceptable prototypes. For several years, many scientists have been working to develop a microwave applicator designed to eliminate pathogens and vegetation (Vela´zquez-Martı´ et al. 2003; Vela´zquez-Martı´ and Gracia-Lo´ pez 2004a, b). At least three prototype field microwave applicators were built and tested for field use (Anonymous 1973; Cundiff et al. 1974; Davis, 1975; Vidmar, 2005; Wayland et al. 1978; Wayland et al. 1973). An early prototype was equipped with four 1.5 kW, 2.45-GHz magnetrons, with movement down to 0.003 mile h^{-1} (0.005 km h^{-1}) provided by a cable winch, and with electric power supplied by a 20-kW gasoline-engine-driven generator (Cundiff et al. 1974). A second prototype had two 30 kW klystron microwave sources, and was powered by a 155 kW diesel-powered generator (Anonymous 1973). Cesare De Zanche's prototype had a total average output of microwave power in the 9.6 kW range at 2.45 GHz (Vidmar 2005). Apparently the application was not deemed practical, because the anticipated marketing of the technology did not materialize.

Research Objectives

The objective of this research project was to evaluate the potential of dielectric heating for weed control. In preliminary investigations, southern crabgrass, rice flat sedge and broadleaf plantain were treated with microwave radiation with frequency of 2.45 GHz for 5, 10, and 15 seconds in the greenhouse. Plants exposed for 5 seconds were considerably suppressed and plants with 10 seconds or more microwave irradiation were effectively controlled. Escaped microwave radiation detected during these experiments were far below United States federal standard limits (5 mW cm^{-2}). The goals of this research include the following.

Objective 1

Develop a prototype with a conveyer to determine effectiveness of microwave radiation on emerged weeds.

Hypothesis

There is lag period between energizing a high-voltage transformer and actual microwave production. A prototype with a conveyer, would allow elimination of the lag period and give more precise results closer to field situations.

Methodology

To build this prototype, a non-motorized treadmill was used as a conveyer. A geared motor was attached to this treadmill wheel via a belt. A geared motor produced the high torque at low speed needed to pull the weed pots across its length. The geared motor speed or rotation was controlled using a voltage regulator. A rectangular tunnel was made of cardboard with dimensions 125 cm in length, width 15 cm, and 25 cm in height with cardboard sheet insulated with aluminum tape inside to prevent any radiation leakage. Four aluminum doors, two at the inlet and two at the exit, were installed in such a way that only one door opened at a time as potted plants were passed into the chamber. In the center of this tunnel, two magnetrons were installed vertically with two separate waveguides. This system allowed the operator to treat weeds with precise application of microwave radiation. There was always a variable lag period between energizing a magnetron and actual microwave radiation production. This conveyer produced more realistic results as it remove the lag period during radiation application. As microwave radiation can easily pass through belts and wooden platform of the treadmill, a plastic tray full of water was placed under the treadmill to absorb leaked microwave radiation. This approach reduced microwave irradiation risk to the operator.

Objective 2

Study the impact of microwave radiation at different plant growth stages to determine the best growth stage for microwave application.

Hypothesis

Young seedlings are more susceptible to microwave radiation than mature plants. Mature weeds might have more potential to recover from thermal injuries.

Method

For this investigation, six different weed species representing grasses, dicots, and sedges were grown in pots in a greenhouse for 4 to 6 weeks. A randomized block design was used in this study. Each pot had one weed seedling. Four replications of weed seedlings pots at different plant heights were treated with treatments of 90 and 180 joules cm^{-2} of microwave radiation using a conveyer. Visual physical injuries to weeds were evaluated on a scale of 0 to 100 on a percentage basis at 1, 2, 3 and 4 WAT. Shoot weight were taken after 4 WAT to confirm shoot biomass reduction. The same study were conducted with comparatively more mature weeds (8 to 10 weeks old) of the same species. Data was analyzed using statistical program (ARM 8, Gylling Data Management, Inc. 405 Martin Boulevard, Brookings, South Dakota 57006). This study was repeated to confirm the outcome.

Objective 3

Evaluate the effect of ambient temperature at the time of treatment on injury caused by microwave radiation.

Hypothesis

When a plant is exposed to microwave radiation, plant injury is mainly due to a rise in plant canopy temperature beyond the biological limit (>50 C) caused by dielectric heating. Plant canopy temperature depends on ambient air temperature. Our hypothesis was that ambient air temperature would have a significant effect on the extent of injury caused by microwave radiation exposure. There should be a positive correlation between ambient temperature and injury level caused by microwave radiation. Humidity should not be a factor as water molecules in air are too detached to generate friction.

Method

For this investigation, six different weed species representing monocots and dicots were grown in pots in greenhouse for 3 to 4 weeks depending upon the season. A factorial design was used to study the relationship between ambient temperature and physical injury level caused by microwave radiation. Each pot had one weed seedling. Four treatments with four replications were used in this study. Replicated weed seedling pots were treated with 90 and 180 joules cm^{-2} of microwave radiation using the conveyer at three different ambient temperatures i.e. 13, 24 and 35 C, representing summer and winter in controlled environmental conditions within a greenhouse. Injury was evaluated visually on a scale of 0 to 100 after 1, 2, 3 and 4 WAT. Shoot weight was taken after 4 WAT to evaluate reduction in shoot weight to determine any reduction. Collected data was analyzed using the statistical program (ARM 8, Gylling Data Management, Inc. 405 Martin Boulevard, Brookings, South Dakota 57006). This study was repeated to confirm the outcome.

Objective 4

Exploring the potential of selective weed control in bermudagrass turf.

Hypothesis

Bermudagrass (*Cynodon dactylon* L.) is a C4 plant. In general, the biological temperature tolerance range of bermudagrass is from 10 to 45 C. Our hypothesis was that C3 broadleaf weed species which have a temperature tolerance of 0 to 30 C, thus could be selectively controlled in bermudagrass. The anatomy of broadleaf weeds allowed them to absorb more energy. Thus, a rise in temperature should be comparatively higher in broadleaf weeds than bermudagrass.

Method

In the first study, bermudagrass plugs were transplanted into 10 cm pots. Seedlings of pitted morningglory (*Ipomoea lacunosa* L.) were grown in a greenhouse and plugged into bermudagrass pots at the cotyledon stage. Pots of bermudagrass infested with pitted morningglory were treated with 45, 63 and 81 joules cm^{-2} of microwave radiation using a stationary microwave applicator. In the second study, bermudagrass, yellow woodsorrel and common chickweed were grown in a greenhouse and transferred into 10 cm pots. Then, these pots were irradiated with microwave radiation using the conveyer with four respective treatments of 54, 90, 126, and 162 joules cm^{-2} of microwave irradiation with four replications of each treatment. Both bermudagrass and weeds were evaluated for visual physical injuries at 1, 2, 3 and 4 WAT. Data was subjected to statistical analysis using statistical software (ARM 8, Gylling Data Management, Inc. 405 Martin Boulevard, Brookings, South Dakota 57006). The study was repeated twice to confirm outcomes.

Objectives 5

Construct a microwave-based prototype which would safely and efficiently deliver the energy to control weed populations in the field.

Hypothesis

Directed microwave application would deliver energy to suppress or kill targeted weeds. Dielectric heating would be the primary cause of death of target weed species. The method should be comparable to postemergence herbicides in effectiveness.

Method

A prototype with a sufficient number of magnetrons (2.45 GHz) was constructed at the Hampton Road Agricultural Research & Extension Center (HRAREC), Virginia Beach, Virginia. These magnetrons were used in series with tilted waveguides of size 9.4 by 4.3 cm each so that total microwave irradiation of individual weeds could be increased to deliver sufficient amount of energy to cause death of the target weed population without sacrificing operational speed of the prototype without or with minimum transmission loss factors like interferences or heat losses during transmission (Figure 1). Individual power supply were used for each magnetron using a proper HT transformer, HT capacitor and diode. The power supply of each magnetron was as per a standard circuit as shown in Figure 2. All components were installed in a wooden case including the assembly of transmission waveguides fitted with magnetrons. This wooden box was painted on both sides with metallic paint to prevent electromagnetic radiation from leaking, thus improving the safety for field use. Four height adjustable wheels were installed on the wooden case to facilitate mobilization. A magnetron with frequency 2.45 GHz is theoretically 55 to 70% efficient, with 30 to 45% of the energy lost as heat. Cooling fans were installed on the wooden case to dissipate the heat generated during operation.

The second prototype was 60 cm in length, 47 cm wide and 60 cm in height. The prototype used in this investigation consisted of four magnetrons, each capable of producing 900 watt of microwave radiation. Magnetrons and other electric parts used were extracted from working microwave ovens. Magnetrons were tested using the International Electrotechnical Commission standard (IEC-705) (James at al. 2002). One major reason to reduce the number of magnetrons was to reduce electromagnetic interference, which may have damaged the first prototype. Custom- made waveguides were made of stainless steel. Each wave guide was 40 cm in length and 10 cm wide. Four compartments were made using aluminum sheets, each 10 cm wide and 10 cm in length. A hole was drilled in each compartment, alternating from one side to the other for each magnetron. The reason to use an alternate magnetron attachment pattern was to minimize electromagnetic interference due to the close proximity of magnetrons to each other. This design was expected to minimize electromagnetic interference as a portion of the microwave energy which reflected from the ceiling of the waveguide was diverted to a point forward of the location where direct microwave radiation hits the surface. Two magnetrons were bolted with screws on each side of the waveguides. These four magnetrons were properly wired with corresponding capacitors, diodes and high voltage transformers as per specifications provided by the manufacturer. Two 12 volt, inline fans capable of exhausting 90 to 120 cubic feet per minute (CFM) air, were attached to magnetrons on both sides of the waveguide. Each inline fan cooled two magnetrons during weed treatment. Each magnetron power supply was attached to a light indicator to ensure their proper operation. Four ten-amperage fuses were also used to protect magnetrons from electric surges. Two portable generators were used to supply electric power to this microwave applicator unit. A 115 volt geared motor capable of producing 44 N.mm torque, was used to drive this prototype in the field. A potentiometer was used to control the revolutions per minute of the geared motor. Total microwave irradiation period of a weed was controlled by regulating the speed of the geared motor.

Research objective 6

Comparisons of microwave treatments with contact herbicides.

Hypothesis

Our hypothesis is microwave treatments of weeds would give comparative results to contact postemergence herbicides such as acetic acid and diquat.

Method

To test this hypothesis, a field study was conducted to compare chemical herbicides with microwave radiation. This study was conducted with four treatments i.e control, diquat, acetic acid and microwave treatments. Plot size of each replication was 2.4 meters long and 1.2 meter wide each. Diquat was used at the rate of 0.6 kg ai ha^{-1}. Similarly, Weed Pharm (acetic acid) was used at the rate of 49 kg ai ha^{-1}. Another four replications were treated with microwave radiation using the prototype (research objective 5) at the rate of 45, 72 and 135 joules cm^{-2} of microwave irradiation. All four treatments were evaluated after 1, 2, 3 and 4 WAT for percent control of emerged weeds. Collected data was evaluated using factorial test in the statistical program (ARM 8, Gylling Data Management, Inc. 405 Martin Boulevard, Brookings, South Dakota 57006). The study was repeated for confirmation.

Facilities and Equipment

The research was conducted in the laboratory, greenhouses and research fields at HRAREC, Virginia Beach. In addition, the mechanical work was carried out in a HRAREC workshop.

Literature Cited

1. Anonymous (1973) Electronic weed "zapper". Farm Industry News 6:27
2. Ascard J (1998) Comparison of flaming and infrared radiation techniques for thermal weed control. Weed Res 38:69–76
3. Ascard J (1994) Dose response models for flame weeding in relation to plant size and density. Weed Res 34:377–385
4. Baker, K F and Fuller H (1969) Soil treatment by microwave energy to destroy plant pathogens. Phytopathol 59:193-197
5. Banga JR, Saa J, Alonso AA (1999) Model-based optimization of microwave heating of bio-products. Pages 193–196 in Proceeding of the International Conference of Microwave and High Frequency Heating, Valencia, Spain. September 13–17
6. Barker AV, Craker LE (1991) Inhibition of weed-germination by microwaves. Agron. J. 83:302–305
7. Barker KR, Gooding Jr GV, Elder AS Eplee RE (1972) Killing and preserving nematodes in soil samples with chemicals and microwave energy. J Nematol 4:75-79
8. Benz W, Moosmann A, Walter H, Koch W (1984) Wirkung einer Bodenbehandlung mit Mikrowellen auf Unkrautsamen, Nematoden und bodenburtige Microorganismen. Mitteil. Biologish. Bunoesanst. Land Forstvirtsch. Berlin-Dalhem 223:128
9. Bhaskara Reddy MV, Raghavan GVS, Kushalappa AC, Paulitz TC (1998) Effect of microwave treatment on quality of wheat seeds infected with Fusarium graminearum. J Agric Eng Res 71:113–117

10. Boulanger RJ, Boerner WM, Hamid MAK (1969) Comparison of microwave and dielectric heating systems for the control of moisture content and insect infestations of grain. J Microwave Power 4:194–207
11. Brodie G, Pasma L, Bennett H, Harris G, Woodworth (2007) Evaluation of microwave soil pasteurization for controlling germination of perennial ryegrass (*Lolium perenne*) seeds. Plant Protection Quarterly 22:150-154
12. Brown OA, Stone RB Andrews H (1957) Low energy irradiation of seed lots. Agric Eng. 9:666–669
13. Casini P, Calamai P, Vecchio V (1993) Flame weeding research in Central Italy. In communication of the 4th Intl. Conf. I.F.O.A.M. Non Chemical Weed Control, Dijon, France, 119-125
14. Cavalante MJB, Muchovej JJ (1993) Microwave irradiation of seeds and selected fungal spores. Seed Sci & Tech 21:247–253
15. Cleary SF (1977) Biological effects of microwave and radiofrequency radiation. CRC Critical Rev. in Environ. Control 7:121-66
16. Cundiff JS, Johnson AW, Flowers RA Glaze NC (1974) Evaluation of microwave treatment of field soil for control of nematodes, soil fungi and weeds. Amer Soc Agri Eng (ASAE) St. Joseph, Mich. Paper No. 74-1562
17. Daar S (1994) New technology harnesses hot water to kill weeds. The IPM Practioner 16:1–5
18. Davis F (1975) "Zapper" blasts weed seeds. N.Z. J. Agric.131:53-54
19. Davis F, Wayland J, Merkle M (1971) Ultrahigh-frequency electromagnetic fields for weed control: phytotoxicity and selectivity. Sci 173:535–537

20. Decareau RV (1985) Microwaves in the Food Processing Industry. New York: Academic Press
21. Diprose MF, Benson FA, Willis AJ (1984) The effect of externally applied electrostatic fields, microwave radiation and electric currents on plants and other organisms, with special reference to weed control. Bot. Rev. 50:171–223
22. Ferriss RS (1984) Effects of microwave oven treatment on microorganisms in soil. Phytopathol. 74:121–126
23. Fujiwara O, Goto Y, Amemiya Y (1983) Characteristics of microwave power absorption in an insect exposed to standing-wave fields. Electronics and Commun. in Japan, 66:46–54
24. Gracia-Lo´ pez C, Vela´ zquez-Martı´ B (2002) Effects of microwave energy for agricultural soil processing. Abstracts of Intl Conf on Agricultural Eng. Budapest, Hungary. 48–50
25. Halverson WR, Bigelow TS, Halverson SL (2003) Design of high power microwave applicator for the control of insects in stored products, paper no. 036156. Amer Soc Agric Eng. Annual Intl. Meeting, 27-30 July 2003, Las Vegas, NV
26. Hamid MAK, Boulanger RJ (1969) A new method for the control of moisture and insect infestations of grain by microwave power. J. Microwave Power 4:11–18
27. Hamid MAK, Kashyap CS, Cauwenberghe RV (1968) Control of grain insects by microwave power. J. Microwave Power 3:126–135
28. Hansson D, Ascard J (2002). Influence of developmental stage and time of assessment on hot water weed control. Weed Res. 42:307–316

29. Heald CM, Menges RM, Wayland JR (1974) Efficacy of ultra-high frequency (UHF) electromagnetic energy and soil fumigation on the control of the reniform nematode and common purslane among southern peas. Plant Disease Rptr 58:985-987
30. Hurlock ET, Llewelling BE, Stables LM (1979) Microwaves can kill insect pests. Food Manufacture 54:37–39
31. Krasewski AW, Nelson SO (1995) Application of microwave techniques in agricultural research. SBMO/IEEE MTT-S Intl. Microwave and Optoelectronics Conf 1:117-126
32. Lal R, Reed WB (1988) The effect of microwave energy on germination and dormancy of wild oat seeds. Canadian Agric Eng 22:85–88
33. Latsch R, Sauter J (2010) Microwave technology for controlling broad-leaved dock. Recherche_Agronomique_Suisse. 1:286-289
34. Lozano JC, Laberry R, Bermu´ dez A (1986). Microwave treatment to eradicate seed-borne pathogens in Cassava true seed. Phytopathol. 117:1–8
35. Mahroof R, Subramanyam B, Eustace D (2003a). Temperature and relative humidity profiles during heat treatment of mills and its efficacy against *Tribolium castaneum* (Herbst) life stages. J. Stored Prod. Res. 39:555–569
36. Mahroof R, Subramanyam B, Throne JE, Menon A (2003b) Time mortality relationships for *Tribolium castaneum* (*Coleoptera: Tenebrionidae*) life stages exposed to elevated temperatures. J. Econ. Ento. 96:1345–1351
37. Mavrogianopoulos GN, Frangoudakis A, Pandelakis J (2000) Energy efficient soil disinfestations by microwaves. J Agric Eng Res 75:146–153
38. Menges R, Wayland J (1974) UHF electromagnetic energy for weed control in vegetables. Weed Sci. 22:584–590

39. Morozov GA, Yu Sedelnikov E, Stakhova NE (1999) Microwave seeds treatment. Pages 193–196 *in* Proc Intl. Conf. on Microwave and High Frequency Heating. Valencia, Spain. September 13–17
40. Mullin J (1995) Microwave processing. In: Gould, G.W. (Ed.), New Methods of Food Preservation. Blackie Academic and Professional. Bishopbriggs, Glasgow. 112–134
41. Murakami H, Komiyama K, Kudo I (2001) Recent progress in long-duration microwave exposure, in: 52nd Intl. Astronautical Congr, Toulouse, France, 1–5 October
42. NASS (2006). National Agricultural use database. http://www.pestmanagement.info/nass/act_dsp_usage_multiple.cfm. Accessed January 17, 2011
43. Nelson SO (1996) A review and assessment of microwave energy for soil treatment to control pests. Trans ASAE, 39:281-289
44. Nelson SO (1985) RF and microwave energy for potential agricultural applications. J. Microwave Power. 20:65–70
45. Nelson SO (1972) Possibilities for controlling stored-grain insects with RF energy. J. Microwave Power. 7:231–237
46. O'Bannon JH, Good MM (1971) Application of microwave energy to control nematodes in soil. J. Nematol.3:93-94
47. Olsen RG, Hammer WC (1982) Thermographic analysis of waveguide-irradiated insect pupae. Radio Sci. 17:95–104
48. Olsen RG (1975) A theoretical investigation of microwave irradiation of seeds in soil. J. Microwave Power 10:281-296

49. Parish S (1990) A Review of Non-Chemical Weed Control Techniques. Biological Agric and Horti 7:117–137
50. Parish S (1989) Investigations into thermal techniques for weed control. In: Proc 11th Intl Cong on Agr Eng, 1989 (eds VA Dodd & PM Grace). 2151–2156
51. Picazo ML, Martínez E, Carbonell MV, Raya A, Amaya JM, Bardasano JL (1999) Inhibition in the growth of thistles (*Cynara cardunculus* L.) and lentils (*Lens culinaris* L.) due to chronic exposure to 50-Hz 15-T electromagnetic fields, Electro and Magnetobiology 18:147–156
52. Reddy P, Mycock DJ, Berjak P (1999) The effect of microwave irradiation on the ultrastructure and internal fungi of soybean seed tissues. Seed Sci Technol 28:277–289
53. Rice RP, Putham AR (1977) Factors which influence the toxicity of UHF energy to weed seeds. Weed Sci 25:179–183
54. Sampson AW, Parker KW (1930) St. Johnswort on range lands of California. Univ. Calif. Agric. Exp. Sta. Bull. 503:25-26
55. Sanchez-Hernandez D, Balbastre JV Osca JM (2002) Microwave energy as a viable alternative to methyl bromide and other pesticides for rice disinfection of industrial processes. Pages 159-162 *in*: Proc Intl. Conf. on Alternatives to Methyl Bromide, 5–8 March 2002, Sevilla, Spain
56. Sartorato I, Zanin G, Baldoin C, Zanche CD (2006). Observations on the potential of microwaves for weed control. Weed Res 46:1-9
57. Shayesteh N, Barthakur NN (1996) Mortality and behaviour of two stored-product insect species during microwave irradiation. J. Stored Products Res. 32:239-246

58. Skiles JW (2006) Plant response to microwaves at 2.45 GHz. Acta Astronautica. 58:258-263
59. Soriano ML, Porras-Soriano A, Porras-Piedra A (2001) Effects of microwave treatment on pathogenicity of ‘‘Fusarium oxysporum f.s.p. melonis’’. XI Congr. of the Mediterranean Phytopatol Union. Evora, Portugal. 17-20
60. Sunberg GM, Risman PO, Kildal PS Ohlsson T (1996) Analysis and design of industrial microwave ovens using the finitedifference time-domain method. J. Microwave Power Electromagnetic Energy. 31:142–157
61. Urech M, Eicher B, Siegenthaler J. (1996) Effects of microwave and radio frequency electromagnetic fields on lichens, Bioelectromagnetics 17:327–334
62. Van Assche C, Uyttebroek P (1983) Possibilities of microwaves in soil disinfestation. EPPO Bull. 13:491-497
63. Van Rienen U, Weiland T (1985) Triangular discretization method for the evaluation of RF-Fields in cylindrically symmetric cavities. IEEE Transactions on Magnetics. 21:2317-2320
64. Van Wambeke E, Wijsmans J, d'Hertefelt R (1983) Possibilities in microwave application for growing substrate disinfestation. Acra Horti 152:209-217
65. Vela GR, Wu JR, Smith D (1976) Effect of 2450 MHz microwave radiation on some soil microorganisms *in situ.* Soil Sci 121:44-51
66. Velázquez-Martí B, Gracia-López, C, de la Puerta R (2008) Work conditions for microwave applicators designed to eliminate undesired vegetation in a field. Bios. Eng 100:31-37

67. Vela´ zquez-Martı´ B, Gracia-Lopez C, Marzal-Domenech A (2006) Germination Inhibition of Undesirable Seed in the Soil using Microwave Radiation. Bios. Eng. 93:365–373
68. Vela´ zquez-Martı´ B. Gracia-Lo´ pez C (2005a) Development and evaluation of modular microwave applicator for agricultural soils and substratum disinfection in automatic sowing line of plant nurseries. Acta Hort. (ISHS) 691:671-678
69. Vela´ zquez-Martı´ B, Gracia-Lo´ pez C, Plaza PJ (2005b) Determination of dielectric properties in the agricultural soils. Biosystems Eng. 91:119–125
70. Vela´ zquez-Martı´ B, Gracia-Lo´ pez C (2004a) Evaluation of two microwave superficial distribution systems designed for substratum and agricultural soil disinfection. Spanish J. Agric Res. 2:323–333
71. Vela´ zquez-Martı´ B, Gracia-Lo´ pez C (2004b) Thermal Effects of Microwave Energy in Agricultural Soil Radiation. Intl. J. of Infrared and millimeter Waves, 25:1109–1122
72. Vela´ zquez-Martı´ B, Osca JM, Jorda´ C Marzal A (2003) Estudio de la viabilidad de la eliminacio´n de semillas de malas hierbas en el suelo por radiacio´n de microondas. Ministerio de Agricultura Pesca y Alimentacio´n. Boletı´n de Sanidad Vegetal. 129:49–55
73. Vidmar, M. 2005. An Improved Microwave Weed Killer. Microwave J 116-126
74. Watters FL (1976) Microwave radiation for control of *Tribolium confusum* in wheat and flour. J Stored Products Res 12:19–25
75. Wayland JR, Davis FS, Merkle MG (1978) Vegetation control. U. S. Patent No. 4,092,800
76. Wayland JR, Merkle MG, Davis FS, Menges RM, Robinson R (1975) Control of weeds with UHF electromagnetic fields. Weed Res 15:1-5

77. Wayland JR, Davis FS, Merkle MG (1973) Toxicity of an UHF device to plant seeds in soil. Weed Sci. 21:161-162

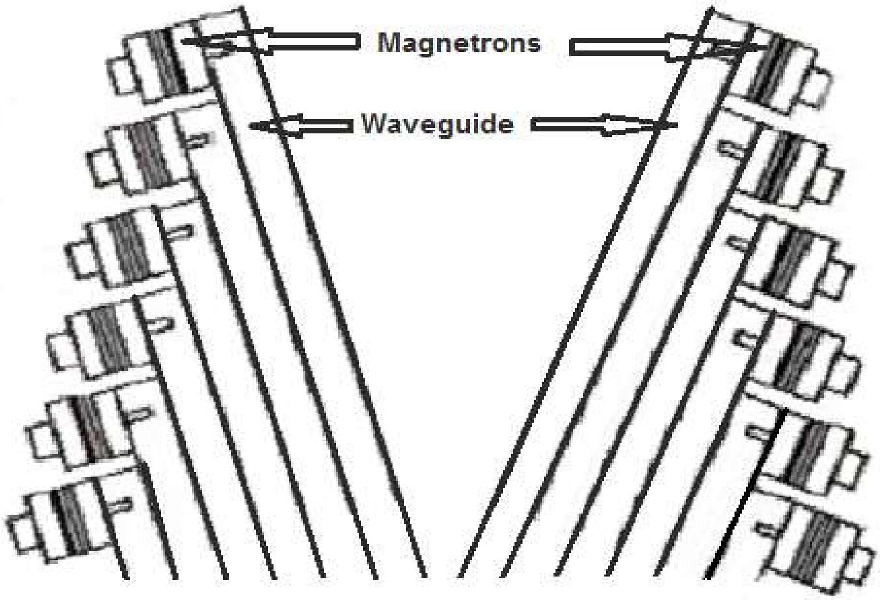

Figure 1. Design of the original prototype of a microwave applicator consisting of twelve magnetrons.

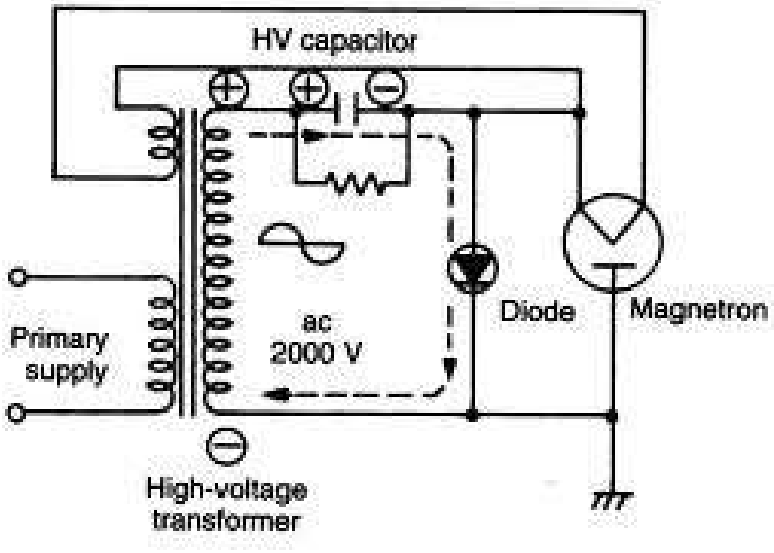

Figure 2. Diagram of the electric circuit for microwave applicator used in the weed control trials.

Chapter 1

Determining the microwave irradiation level needed for weed control using a stationary versus a mobile microwave applicator

Aman Rana and Jeffrey F. Derr*

Abstract

Accurately measuring the microwave irradiation period is a challenge due to the lag between energizing the magnetron and actual microwave radiation production. This lag time depends upon many factors, including temperature of the magnetron, and causes errors in calculation of actual energy needed for weed management. Misinterpretation may over-estimate the required energy load, adversely affecting perceived value of the technology. To eliminate this problem, a study was conducted using a conveyer and was compared to a stationary unit. The conveyer was built for this purpose using two magnetrons producing 900 watt, each installed on a treadmill with a power supply. There was a significant improvement in precision for calculations of total energy required for weed control. Southern crabgrass, dallisgrass, fragrant flatsedge, common ragweed, white clover, pitted morningglory, and yellow nutsedge showed more uniform thermal injuries and greater control using the conveyer than a stationary microwave application system. The LD_{50} for broadleaf weeds treated with microwave radiation using the conveyer ranged from 31.2 joules cm^{-2} (common ragweed) to 36.8 joules cm^{-2} (pitted morningglory). In comparison, treatment of weeds with microwave radiation using the stationary mode system resulted in a range of LD_{50} values in broadleaf weeds of 64.5 joules cm^{-2} (common ragweed) to 155.1 joules cm^{-2} for white clover. Similarly, the LD_{50} values for grasses treated with microwave radiation using the conveyer ranged from 34.3 (dallisgrass) to 69.5 joules cm^{-2} (southern crabgrass). In comparison, the range in LD_{50} values for grasses treated with the stationary system was 136.1 to 182 joules cm^{-2}. The LD$_{50}$ values for sedges treated with microwave radiation using the conveyer ranged from 29.2 joules cm^{-2} (yellow nutsedge) to 78.1 joules cm^{-2} (fragrant flatsedge). In comparison, the range in LD$_{50}$ values for the stationary mode system was 119.4 joules cm^{-2} for fragrant flatsedge to 145.9 joules cm^{-2} for yellow nutsedge. Weed control with microwave irradiation using the conveyer system was more realistic to regards to field use and required less energy in comparison to the stationary mode.

Nomenclature: Southern crabgrass, *Digitaria ciliaris* (Retz.) Koeler; dallisgrass, *Paspalum dilatatum* Poir.; fragrant flatsedge, *Cyperus odoratus* L.; common ragweed, *Ambrosia artemisiifolia* L.; white clover, *Trifolium repens* L.; pitted morningglory, *Ipomoea lacunosa* L.; and yellow nutsedge, *Cyperus esculentus* L.

Key words: Nonchemical weed control, microwave radiation, prototype, weed management.

* Graduate Student and Professor, Hampton Road Agricultural Research & Extension Center (HRAREC), 1444 Diamond Springs Road, Virginia Beach, VA 23455. Corresponding author's E-mail: jderr@vt.edu.

Introduction

Weed management has always been a challenge in agriculture. Weeds compete with crops for water and nutrients, resulting in yield loss and quality reduction. However, chemical weed control requires widespread spraying, which can inefficiently apply herbicides but also potentially cause adverse effects on the environment (Fernandez-Perez 2007, He Xiong-kui, 2004, Knee et al. 2010), decrease biological diversity (Ros et al. 2006), cause changes in the weed community (Potts et al. 2010; Schooler et al. 2010), and result in resistance of weeds to herbicides (Cirujeda and Taberner 2010; Marshall et al. 2010). Questions with herbicide use, including underground and surface water contamination, and pesticide residues in food, have raised public concerns. These issues have challenged weed scientists to consider alternatives and integrated systems of weed management to reduce herbicide inputs. Moreover, few new herbicide modes of action have been discovered, so new approaches for non-chemical weed management are needed. Non-chemical methods of weed control are also needed by organic growers.

Weed control using microwave radiation is a thermal method. Thermal control methods can be divided in two groups according to their mode of action (a) direct heating methods that use flame, infrared, hot water, steaming, or hot air and (b) indirect heating methods which includes electrocution, microwave, laser and ultraviolet radiation. One potential alternative is the use of microwave radiation, a particular form of indirect thermal weed control. Microwave-based weed control methods work via the systematic increase of temperature due to dielectric heating (Barker and Craker 1991; Diprose et al. 1984; Fujiwara et al. 1983). This dielectric heating has been exploited to kill weeds, weed seed (Barker & Craker 1991; Davis et al. 1971; Sartorato et al. 2006) and insects (Nelson 1996). Several related studies indicate plant developmental stage at the time of treatment is an important factor for weed control (Ascard 1994, 1998; Casini et al. 1993; Daar 1994; Hansson & Ascard 2002; Parish 1989, 1990). Energy cost evaluations indicated that increased efficiency is required for methods using microwave radiation to compete with other thermal methods of weed control. Microwave efficiency could be increased by a flux configuration that minimizes soil penetration and maximizes absorption by plants, which, in turn, depends on plant growth form (Sartorato et al. 2006).

There is a lag period between the initial energizing of the magnetron and actual microwave radiation production. Magnetrons contain a cathode filament surrounded by a specifically designed cavity to produce a desired frequency of microwave radiation. This cavity is surrounded by two magnets. Its cathode filament is heated by low voltage and high amperage. This lag period depends upon factors like the initial temperature of the magnetron. In a stationary unit, it is hard to detect the magnitude of the lag period. Failure to account for these lag period results in an overestimate of the energy requirement and misinterpretation of cost benefit analyses. To eliminate the lag period, a conveyer was built and used to produce more realistic quantification of microwave radiation required for weed control as compared to stationary units. The hypothesis was this mobile microwave applicator would allow elimination of the lag period and thus would give more precise quantification of the energy required for weed control as well as provide a better simulation of field microwave applications.

Materials and Methods

This experiment was conducted at the Hampton Road Agricultural Research and Extension Center (HRAREC), Virginia Beach, VA. To eliminate the gap between electric power supplied to magnetrons and actual microwave radiation produced, a conveyer was built. A non-motorized treadmill (Model No. WLTL23180, Weslo, 1500 South 1000 West Logan, UT 84321) was used as a base. An 115V, geared motor with torque 44 N.mm (Model No. 2Z797D, Dayton, 5959 W Howard St. Niles, IL 60714), was used to drive the treadmill belt system at a desired speed. A potentiometer (Model No. 1LS1I1, Levitop, 20497 SW Teton Avenue Tualatin, OR 97062), was used to control the rotations per minute (RPM) of the geared motor. Total microwave irradiation exposure to each weed was controlled by regulating the speed of the geared motor. A rectangular tunnel was made of cardboard with dimensions 120 cm in length, width 15 cm, and 25 cm in height. This cardboard tunnel was insulated inside with aluminum tape to avoid unwanted leakage of microwave radiation during operation (Fig. 1). The conveyer was stopped when weeds were treated in stationary mode and weeds were place underneath the microwave waveguide in the cardboard tunnel. Total weed microwave irradiation exposure in the stationary mode was controlled by switching on and off the magnetron power supply. Microwaves could pass through the nylon belt and wooden frame of the treadmill so a tray filled with water was placed underneath conveyer to absorb the residual energy. This technique also protected the applicator from floor reflected microwave radiation, thus making for a safer working environment.

Two magnetrons (Model No. 2M246, LG, 10225 Willow Creek Road, San Diego CA 92131) of output power of 900 watt, extracted from microwave ovens, were fitted in the middle of the tunnel using suspension wire and a support frame made of PVC pipes. These two magnetrons were properly wired with corresponding capacitors (Model No. CH2100954C8N, LG, 10225 Willow Creek Road, San Diego CA 92131), diodes and high voltage transformer (Model No.CBJ72, Samsung, 85 Challenger Road, Ridgefield Park, NJ) as per specifications provided by the manufacturer. These parts were also extracted from the same microwave ovens as the magnetons. Magnetrons were tested using the International Electrotechnical Commission IEC-705 standard (James at al. 2002). Since September 1990, microwave oven manufacturers have adopted a single standard for measuring the power output for microwave ovens. This standard 1988, uses 1 liter distilled water load and the test is made using a cold oven in defined ambient conditions. In this methodology, cold (10 ± 2 C) potable water is heated in glass container of certain parameters and the time for a 10 ± 2 C elevation of water temperature is measured. The microwave power absorbed in the water during the heating and used for its temperature elevation is calculated using following equation.

$$\Delta T = (P \times t)/(V \times cp \times \rho)$$

where: ΔT – the increase of the mean temperature of the heated water (K),

P - microwave power used for heating (W),

V - volume (m^3),

cp - heat capacity (Joules kg^{-1} K^{-1}),

ρ - density (kg m^{-3}),

t - time of heating (s)

The tested magnetrons were approximately 65% efficient in converting electric energy into microwave energy. Remaining energy (35%) is converted into heat that may damage magnetrons. Two fans attached to a tripod were used to cool the magnetrons during weed treatment. Four aluminum doors, two at inlet and two at exit, were installed in such a way that only one door open at a time as potted plants were passed into chamber. This design increased the safety level for the operator.

Power Supply and Operation Monitor

A simple power supply, including a magnetic-shunt transformer, a high voltage capacitor and rectifier was used for each individual magnetron. Such a power supply allowed the operation from a standard 110 volt, 60 Hz supply. One three-phase 220 volt, 60 Hz power supply was used for the conveyer with two magnetrons attached. The three-phase power supply was actually an advantage, allowing one to turn on the individual magnetrons sequentially. The power supplies of adjacent magnetrons were connected to different phases of the three-phase supply so that the electric load was distributed evenly. In this way, the operation of the magnetrons is unsynchronized. When using a number of magnetrons and corresponding power supplies, component failures are not unexpected. Unfortunately, in the parallel operation of several magnetrons, the failure of a single microwave source may go unnoticed, compromising the result of the experiment. An efficient and reliable monitor of the operation of each individual magnetron was therefore required. Sometimes a magnetron doesn't produce microwave radiation efficiently, even though all connections are intact, due to a voltage drop or damaged cathode filament. Amperage load of each magnetron was monitored on a regular basis after each treatment to make sure the unit was running properly. The circuit diagram of the magnetron power supply and corresponding operation monitor is shown in Figure 2. There were a total of two power supplies and two monitor circuits with two indicator light bulbs, one for each of the two magnetrons. A microwave-radiation leakage detector (Model No. DT-2G (Shenzhen Everbest Machinery Industry Co., Ltd. 19th Building, 5th Region, Baiwangxin Industry Park,Baimang, Xili, Nanshan, Shenzhen, China P.C. 518108), with sensitivity range 0 to 9.99 mW cm^{-2} and a warning value set at 5.0 mW cm^{-2} was used to find any leaking microwave radiation during operation as well as to determine safe distances for human operators.

To test the assumption that the mobile microwave applicator was more realistic, control of southern crabgrass, dallisgrass, fragrant flatsedge, common ragweed, white clover, pitted morningglory, and yellow nutsedge was assessed. These weeds were selected based on their anatomical diversity. The assumption was that a wider leaf would intercept more microwave radiation energy. Plant canopy area was different for the different weed species tested. Even the angle of inclination of microwave radiation on the canopy were different for upright and prostrate weeds. All weeds were grown from seed or tubers in flats containing a peat-based growing medium in a greenhouse for 3 to 4 weeks then transplanted to 10 by 10 cm pots. At treatment, grasses and sedges were 5 to 12 cm tall and common ragweed plants were 12 to 18 cm tall. Pitted morningglory and field bindweed were in the first true leave stage. White clover and henbit were 8- to 2 cm tall. These weeds were grown from seed to achieve uniformity. They were irrigated daily and a polymer- coated slow-release fertilizer (14-14-14, Scotts, 14111 Scottslawn Road, Marysville, OH 43040), was applied at 5 g per pot. A randomized complete block design with nine treatments and four replications were used in this study. Each weed species was treated using the conveyer with the following doses of microwave radiation: 0, 54, 72, 90, 108, 128, 144, 162, and 180 joules per centimeter^2. Similar treatments were repeated using a stationary unit without a running conveyer. In general, a magnetron needs a critical temperature to produce microwave radiation optimally. Magnetrons were preheated for one minute before treatment started to ensure proper operation. The greenhouse temperature was approximately 32 to 35 C at the time of treatment. These microwave radiation-treated weeds were evaluated visually weekly for four weeks and shoot fresh weight was recorded at 4 weeks after treatment (WAT). This study was repeated to confirm the results. Data were subjected to dose response analysis to calculate LD_{50} values using statistical software (ARM 8, Gylling Data Management, Inc. 405 Martin Boulevard, Brookings, South Dakota 57006). Dose response algorithms, developed by Dr. J. J. Hubert, Professor Emeritus, Department of Mathematics and Statistics, University of Guelph, were calculated using this statistical package .The algorithms were used to calculate LD_{50} values for each weed species and microwave radiation application system. Graphs for injuries at 1 WAT and shoot weight (% of untreated) were constructed using statistical software (JMP 10, 100 SAS Campus Drive Building T Cary, NC 27513).

Results and Discussion

Results confirmed the lag period between energizing the magnetron and actual microwave radiation production. This lag period was variable, dependent on initial temperature of the magnetron. Overall injury to grasses, sedges and broadleaf weeds was higher by the microwave radiation conveyer system in comparison to the stationary mode with each respective dose. There was a significant three way interaction among weed species, microwave dose, and mode of application for percent injury and shoot fresh weight.

Grasses. Southern crabgrass was not injured at 1 WAT when exposed to microwave radiation at 54 and 72 joules cm^{-2} in the stationary mode (Fig. 3). There was no significant shoot weight reduction in southern crabgrass at these microwave doses in the stationary mode when compared to untreated plants (Fig. 4). However, microwave radiation at 54 and 72 joules cm^{-2} caused 29% and 60% injury, respectively, to southern crabgrass when applied using the conveyer system. Even the highest dose of microwave radiation (180 joules cm^{-2}) in the stationary mode did not control southern crabgrass (46% injury), while the same dose in the conveyer caused 98% injury. Based on the dose response analysis, the LD_{50} for southern crabgrass was 69.5 joules cm^{-2} for the conveyer system in comparison to 189 joules cm^{-2} when microwave radiation were applied in the stationary mode (Table 1). A similar pattern was noticed in shoot fresh weight of southern crabgrass, where 180 joules cm^{-2} dose of microwave radiation caused a 93% reduction using the conveyer mode in comparison to a 46% reduction with the stationary system.

Dallisgrass was not injured at 1 WAT when it irradiated with 54 joules cm^{-2} of microwave radiation energy in the stationary mode (Fig. 3). Injury to dallisgrass was only apparent at 72 joules cm^{-2} or more microwave irradiation using the stationary mode of microwave application. Maximum injury was 79% at 180 joules cm^{-2} with the stationary system while essentially complete control was seen at 1 WAT with the conveyer system. However, microwave radiation at 54 joules cm^{-2} caused 71% injury to dallisgrass using the mobile microwave applicator. Based on the dose response analysis, the LD_{50} for dallisgrass was 34.3 joules cm^{-2} with the conveyer system in comparison to 136.1 joules cm^{-2} when microwave radiation was applied in the stationary mode (Table 1). A similar pattern was noticed in shoot fresh weight reduction of dallisgrass, where 180 joules cm^{-2} dose using the conveyer system caused a 100% reduction while the same dose in the stationary mode caused a 65% reduction compared to untreated plants (Fig. 4).

Sedges. Unlike southern crabgrass and dallisgrass, fragrant flatsedge was injured from both the stationary (15%) as well as the mobile microwave application mode (29%) when it exposed to the lowest dose of microwave radiation energy (54 joules cm^{-2}) at 1 WAT (Fig. 3). The highest dose of microwave radiation (180 joules cm^{-2}) provided similar fragrant flatsedge control (89%) irrespective of the application mode. Based on the dose response analysis, the LD_{50} for fragrant flatsedge was 78.1 joules cm^{-2} for the mobile microwave application mode in comparison to 119.4 joules cm^{-2} when microwave radiation was applied in the stationary mode (Table 1). Shoot fresh weight of fragrant flatsedge was 11% of the nontreated plants irrespective of application mode at the 180 joules cm^{-2} dose of microwave radiation (Fig. 4).

Yellow nutsedge was not injured at 54 joules cm^{-2} and 4% at 72 joules cm^{-2} when exposed to microwave radiation energy in the stationary mode (Fig. 3). The maximum injury was 68% at the highest level of microwave radiation (180 joules cm^{-2}) in the stationary mode, while the same dose using the conveyer system gave complete control at 1 WAT. However, 54 joules cm^{-2} of microwave radiation applied via the conveyer system caused 76% injury to yellow nutsedge. Based on the dose response analysis, the LD_{50} for yellow nutsedge was 29.2 joules cm^{-2} in the mobile microwave application mode in comparison to 145.9 joules cm^{-2} when microwave radiation are applied in the stationary mode (Table 1). A similar pattern was noticed in fresh shoot weight reduction of yellow nutsedge where the 180 joules cm^{-2} dose applied using the conveyer system caused a 100% reduction while the same dose in the stationary mode caused a 46% reduction, compared to untreated plants (Fig. 4).

Broadleaf weeds. White clover was not injured when exposed to 54 joules cm^{-2} and 72 joules cm^{-2} of microwave radiation energy in the stationary mode (Fig. 3). Maximum injury observed from the stationary mode in white clover was 73% when exposed to 180 joules cm^{-2}. In contrast, microwave radiation caused 78% injury at 54 joules cm^{-2} to white clover using the conveyer system. White clover was completely controlled at 144 or higher joules cm^{-2} dose of microwave radiation using the conveyer system. Based on the dose response analysis, the LD$_{50}$ for white clover was 34.5 joules cm^{-2} with the mobile microwave application mode in comparison to 155.1 joules cm^{-2} when microwave radiation was applied in the stationary mode (Table 1). A similar pattern was noticed in fresh shoot weight reduction of white clover, where 144 joules cm^{-2} dose applied using conveyer system caused a 100% reduction while the same dose in the stationary mode caused a 63% reduction compared to untreated plants (Fig. 4).

Pitted morningglory was not injured at the 54 and 72 joules cm^{-2} doses of microwave radiation in the stationary mode with an injury maximum of 76% at 180 joules cm^{-2} (Fig. 3). However, pitted morningglory was injured 90% at 54 joules cm^{-2} and was totally controlled at 90 joules cm^{-2} or more using the conveyer system. Based on the dose response analysis, the LD$_{50}$ for pitted morningglory was 36.8 joules cm^{-2} for the mobile mode in comparison to 138.4 joules cm^{-2} when microwave radiation was applied in the stationary mode (Table 1). A similar pattern was noticed in shoot fresh weight of pitted morningglory, which was reduced 100% at 90 joules cm^{-2} or more in the mobile mode in comparison to a 67% reduction with the stationary system (Fig. 4).

Common ragweed was injured 24% at 54 joules cm^{-2} dose of microwave radiation in the stationary mode with an injury maximum of 95% at 180 joules cm^{-2} (Fig. 3). However, common ragweed was injured 93% at 54 joules cm^{-2} and totally controlled at 72 joules cm^{-2} or more using the mobile mode. Based on the dose response analysis, the LD_{50} for common ragweed was 31.2 joules cm^{-2} in the mobile mode in comparison to 64.5 joules cm^{-2} when microwave radiation was applied in stationary mode (Table 1). A similar pattern was noticed in shoot fresh weight reduction of common ragweed, where 72 joules cm^{-2} applied using the conveyer system gave complete control while 40% reduction was seen with the stationary mode, compared to untreated plants (Fig. 4). Only 81% shoot weight reduction was noticed at 180 joules cm^{-2} in the stationary mode for common ragweed.

There were several possible reasons for the observed differences in injury caused by microwave radiation for the stationary mode compared to the conveyer or mobile mode. One reason is the lag period between energizing the magnetrons and actual microwave radiation production, which depends upon factors like the type of cathode filament and the magnetron temperature. Size of this gap error is hard to determine as it depends upon many factors like initial temperature of the magnetron. A colder magnetron, in general, caused a bigger gap error as compare to an already warm magnetron (Goldwasser 2015). Ambient temperature is also a vital factor which determines initial temperature of the magnetron during operation. Even the fan used to dissipate heat generated by a magnetron can contribute to a gap error. These results show that for the first few seconds, magnetrons were not producing sufficient microwave radiation to cause injury to plant tissues for the stationary system. This initial delay in microwave production might be causing lower injury to weeds in the stationary mode but this delay was eliminated using the conveyer system as the magnetrons were running continuously. This gap in microwave radiation produced is very crucial in the total energy calculation. Most researchers used custom-built stationary units of a microwave applicator in their trials. Most researchers either didn’t take into consideration this gap in microwave energy production when using a stationary unit for their respective experiments or chose not to include it in their calculations. However, not accounting for this gap results in an over-estimation of the total energy requirement for weed control. Mattsson (1993) reviewed the possibility of using microwaves for weed control. He concluded that microwave power was unlikely to be used for field weed control due to high energy consumption and high microwave power. Similarly, Sartorato et al. (2006) reported microwave radiation controlled different weed species effectively, but the energy requirements for satisfactory weed control were very high, ranging from 1,000 to 3,400 kg diesel per hectare. The conveyer actually bypasses this lag period during microwave radiation application. Results of the conveyer are thus closer to actual field conditions where a microwave applicator would move continuously over the weed population.

Second, there is always non-uniformity in microwave energy distribution due to the antenna and the waveguide design along with interferences during microwave energy transfer (Xiaofeng Wu, 2002). Non-uniformity can be a result of the interactions between electromagnetic waves and plant species. A uniform field in an empty applicator might become non-uniform after the introduction of a weed. Attenuation can lead to non-uniform field distribution inside the material. The energy distribution pattern of microwaves are fairly non-uniform due to the design used. One portion of the microwave energy is sent directly toward the target weeds while other portions of microwave radiation would move towards the closed end of the waveguide and be reflected back towards the target weed. Almost half of the microwave energy produced in the stationary mode may bounce from the side walls of the waveguide and reach to target weeds at varying angles. This could cause uneven delivery of microwave energy to the weed canopy in the stationary mode. Plant canopy passed through all the uneven microwave energy spots when irradiated using the conveyer system. Distribution of microwave energy was therefore comparatively more uniform compared to the stationary mode. Lower microwave irradiation in the stationary mode generally did not produce significant injury within one week of application, with very few lesions on plant leaves and none on stems. However, even the lowest dose applied with the conveyer system for 3 seconds caused injury to weed seedlings.

The energy dose applied by weed control machinery is mainly regulated by the driving speed (Ascard, 1995; Hansson, 2002). A combination of driving speed and treatment width of equipment determines treatment time. The driving speed is usually quite low to achieve sufficient thermal weed control and reduce weed regrowth when applying microwave radiation. A slow speed results in increased treatment time and costs, making the system less likely to be utilized by farmers due to economics. Experiments done using a stationary microwave units include lag period errors in energy calculations. It is easy to eliminate this error by using a mobile microwave applicator, where the system is operated only after the magnetrons are producing microwave radiation and are continuously running.

Vela´zquez-Martı´ and Gracia-Lo´ pez, (2004) worked on a microwave applicator design and found a prototype based on overlapping magnetrons that appeared to be more efficient than a waveguide prototype because it allowed lethal temperatures to be reached in a shorter time. Existing magnetrons are designed for specific heating requirements of home appliances or other uses. The design of the microwave waveguide needs to be further investigated by engineers to meet the needs of the agriculture sector for weed management. This may lead to totally redesigned magnetrons and waveguides, specifically designed to meet the needs of the agriculture sector. Design of the running prototype used in this investigation was different than designs used by other researchers for similar kinds of research. Therefore, comparison between different designs of microwave applicators was not feasible.

The power technique in which the high voltage is applied to the magnetron simultaneously with the application of the heater current to the magnetron filament is known as "cold-start" operation (Burke and Hester 1975). The cathode of a magnetron is incapable of generating the level of electron emission necessary for proper operation of the magnetron. In order to have sufficient electrons within the tube for full operation, the magnetron temperature must be raised to the level specified by the manufacturer and in practice a magnetron does not reach its operating temperature for a period of perhaps 1 to 1.5 seconds after current is supplied to the magnetron heater. The power level in most microwave ovens is set by pulse width control of the magnetron, usually with a cycle that lasts 10 to 30 seconds (Goldwasser 2015). The power ratios are not quite linear as there is up to a 3 second warmup period after the magnetron is energized. A National Aeronautics and Space Administration (NASA) report confirmed heating requirements of magnetron filaments during start-up operations of the magnetron (Brown 1981). Nelson (1996) concluded that microwave-based weed management was not economically viable. However, his studies were based on a comparison between once-applied herbicide and microwave treatments and ignored the long term effects of herbicide resistance on crop yield potential. Velázquez-Martí et al. (2008) confirmed the possibility of elimination of herbaceous species already germinated in the field. Wayland et al. (1973) concluded that, for the power levels used, energy density and irradiation period were interchangeable, with respect to effectiveness, as long as total energy remained about the same. Energy cost evaluation indicated that increased efficiency is required for this technique to compete with other thermal methods. Microwave efficiency could be increased by a flux configuration that minimizes soil penetration and interferences and maximizes absorption by plants, which, in turn, depends on plant anatomy (Sartorato et al. 2006). Postemergence weed control could be achieved using a proper design of a microwave applicator for weed control.

Acknowledgements

The authors want to thanks all faculty and staff of the Hampton Road Agricultural Research and Extension Center Station (HRAREC), for providing necessary resources and help to complete this study.

Literature Cited

Ascard J (1994) Dose-response models for flame weeding in relation to plant size and density. Weed Res 34:377-385

Ascard J (1995) Thermal weed control by flaming: Biological and technical aspects. PhD thesis. Department of Agricultural Eng., Swedish University of Agricultural Sciences. Alnarp, Sweden. Rpt 200 p

Ascard J (1998) Comparison of flaming and infrared radiation techniques for thermal weed control. Weed Res. 38:69-76

Barker AV, Craker LE (1991) Inhibition of weed-germination by microwaves. Agron J 83:302–305

Brown WC (1981) Satellite Power System (SPS) Magnetron Tube Assessment Study. NASA Contractor Report 3383 http://ntrs.nasa.gov/archive/nasa/casi.ntrs.nasa.gov/19810009965.pdf. Accessed January 17, 2015

Casini P, Calamai P, Vecchio V (1993) Flame weeding research in Italy. In: Commun. 4th Intl. Conf. IFOAM, Non-chemical Weed Control (ed. JM Thomas). Association Colleque IFOAM, Dijon, France. 119–125 p

Cirujeda A, Taberner A (2010) Chemical control of herbicide-resistant *Lolium rigidum* Gaud in north-eastern Spain. Pest Mgt Sci 66:1380-1388

Daar S (1994) New technology harnesses hot water to kill weeds. The IPM Practioner. 16:1–5

Davis F, Wayland J, Merkle M (1971) Ultrahigh-frequency electromagnetic fields for weed control: phytotoxicity and selectivity. Sci 173:535–537

Diprose MF, Benson FA, Willis AJ (1984) The effect of externally applied electrostatic fields, microwave radiation and electric currents on plants and other organisms with special reference to weed control. Bot Rev 50:171-223

Fernandez-Perez M (2007) Controlled release systems to prevent the agro-environmental pollution derived from pesticide use. J Environ Sci and Health Part B. 42:857-862

Fujiwara O, Goto Y, Amemiya Y (1983) Characteristics of microwave power absorption in an insect exposed to standing wave fields. Electronics and Commun Japan. 66:46–54

Goldwasser SM (2015) Notes on the Troubleshooting and Repair of Microwave Ovens. Version 3.64 http://www.repairfaq.org/sam/micfaq.htm#mictoc Accessed January 17, 2015

Hansson D, Ascard J (2002) Influence of developmental stage and time of assessment on hot water weed control. Weed Res 42:307–316

Hansson D (2002) Hot water weed control on hard surface areas. PhD thesis. Department of Agricultural Eng., Swedish University of Agricultural Sciences. Alnarp, Sweden. Rpt 323

He Xiong-kui (2004) Improving severe draggling actuality of plant protection machinery and its application techniques. Trans CSAE. 20:13–15

International Electrotechnical Commission (1988) Methods for Measuring the Performance of Microwave Ovens forHousehold and Similar Purposes. IEC Publication 705, 2nd edn. Geneva: International Electrotechnical Commission.

James C, Swain MV, James SJ, Swain MJ (2002) Development of methodology for assessing the heating performance of domestic microwave ovens. International Journal of Food Sci and Technol 37:879–892

Knee KL, Gossett R, Boehm AB, Paytan A (2010) Caffeine and agricultural pesticide concentrations in surface water and groundwater on the north shore of Kauai, Hawaii, USA. Marine Pollution Bul. 60:1376–1382

Marshall R, Hull R, Moss SR (2010) Target site resistance to ALS inhibiting herbicides in *Papaver rhoeas* and *Stellaria* media biotypes from the UK. Weed Res 50:621–630

Mattsson B (1993) Weed control by microwaves a review. (OT: Mikrovagor for ugrasbekampning - en litteraturstudie). Department of Agricultural Eng. Swedish University of Agricultural Sciences. Alnarp, Sweden. Rpt. 171

Nelson SO (1996) A review and assessment of microwave energy for soil treatment to control pests. Trans ASAE. 39:281–289

Parish S (1989) Investigations into thermal techniques for weed control. Pages 2151–2156 *in* Proc. 11th Intl Congr Agril Eng (eds VA Dodd & PM Grace). Rotterdam Balkema

Parish S (1990) A Review of Non-Chemical Weed Control Techniques. Biol Agri and Horti 7:117-137

Potts GR, Ewald JA, Aebischer NJ (2010) Long-term changes in the flora of the cereal ecosystem on the Sussex Downs, England, focusing on the years 1968–2005. J Appl Ecol 47:215-226

Burke RV, Hester TE (1975) Power controller for microwave magnetron. US Patent US4001537 A. https://www.google.com/patents/US4001537#backward-citations. Accessed January 17, 2015

Ros M, Goberna M, Moreno JL, Hernandez T, García C, Insam H, Pascual JA (2006) Molecular and physiological bacterial diversity of a semi-arid soil contaminated with different levels of formulated atrazine. Appl Soil Ecol 34:93-102

Sartorato I, Zanin G, Baldoin C, De Zanche C (2006) Observations on the potential of microwaves for weed control. Weed Res 46:1–9

Schooler SS, Cook T, Prichard G, Yeates AG (2010) Disturbance-mediated competition the interacting roles of inundation regime and mechanical and herbicidal control in determining native and invasive plant abundance. Biol Invasions. 12:3289–3298

Velázquez-Martí B, Gracia-López, C, de la Puerta R (2008) Work conditions for microwave applicators designed to eliminate undesired vegetation in a field. Bios. Eng 100:31-37

Vela´ zquez-Martı´ B, Gracia-Lo´ pez C (2004) Evaluation of two microwave superficial distribution systems designed for substratum and agricultural soil disinfection. Spanish J Agric Res 2:323-331

Wayland JR, Davis FS, Merkle MG (1973) Toxicity of an UHF device to plant seeds in soil. Weed Sci. 21:161-162

Xiaofeng Wu (2002) Experimental and Theoretical Study of Microwave Heating of Thermal Runaway Materials. Dissertation. Virginia Polytechnic Institute and State University 4-6 p

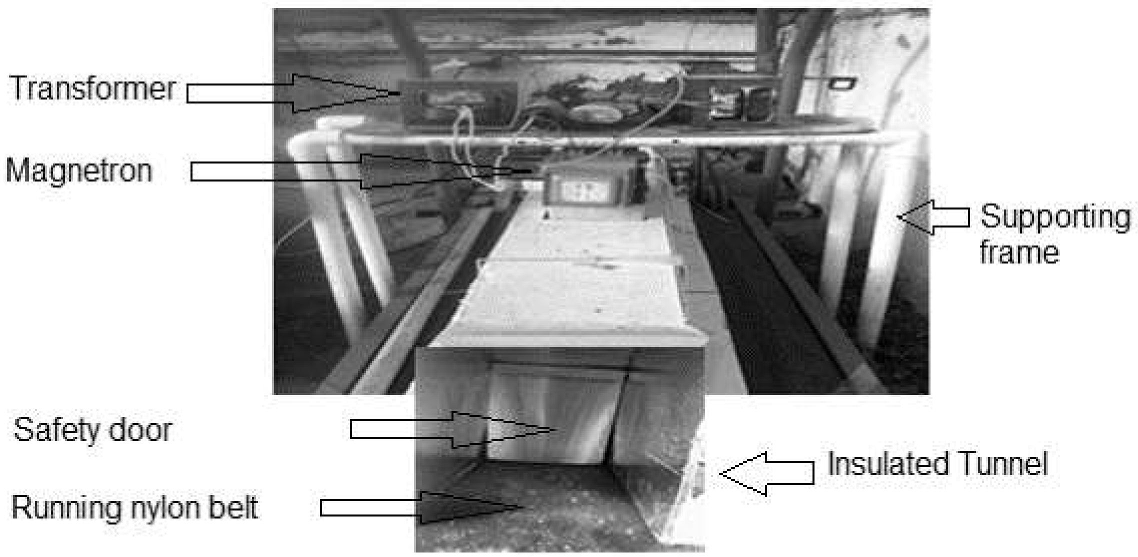

Figure 1. Overview of the mobile microwave applicator used for the greenhouse weed control trials.

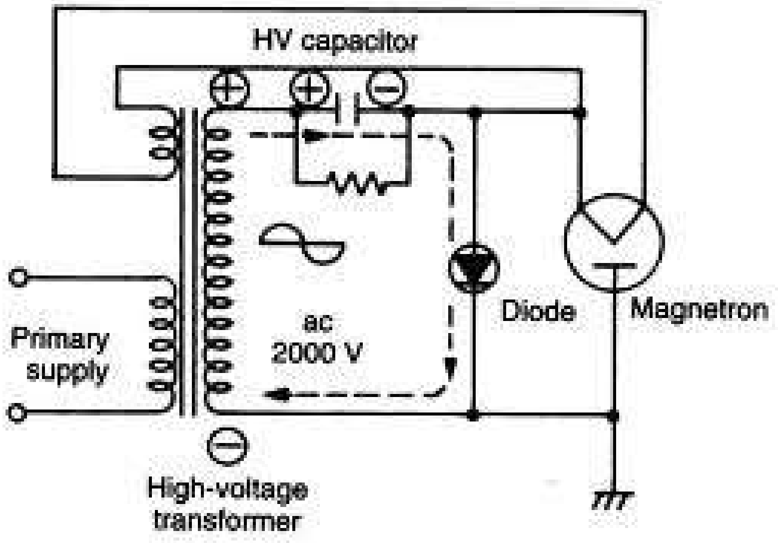

Figure 2. Diagram of the electric circuit for microwave applicator used in the weed control trials.

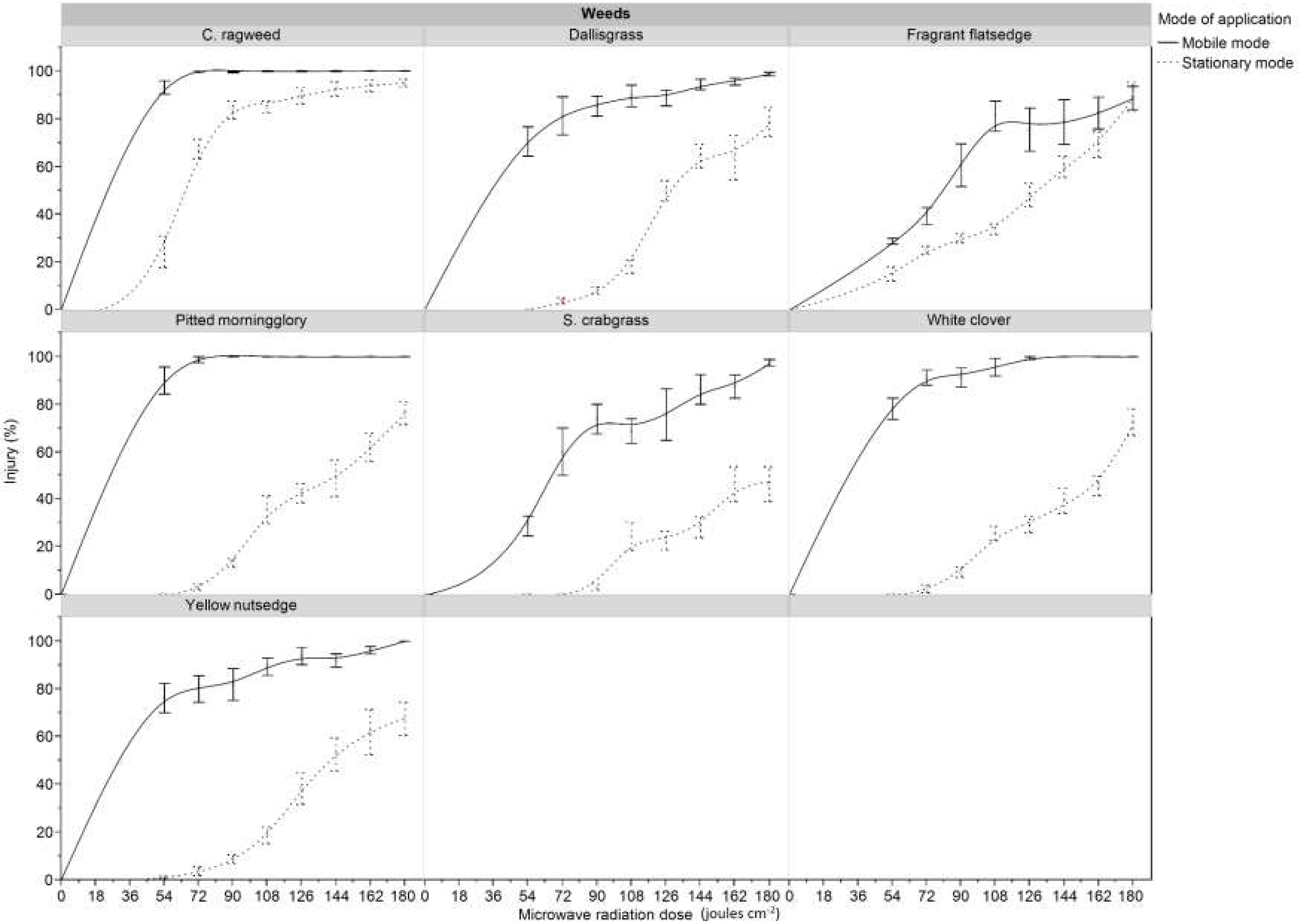
Weeds
Mode of application
Mobile mode
Stationary mode
C. ragweed
Dallisgrass
Fragrant flatsedge
Pitted morningglory
S. crabgrass
White clover
Yellow nutsedge
Injury (%)
0
20
40
60
80
100
0
18
36
54
72
90
108
126
144
162
180
Microwave radiation dose (joules cm⁻²)

Figure 3. Influence of microwave radiation applied using a mobile and a stationary system on visual-estimated injury of different weed species at 1 WAT in a greenhouse study. Error bars indicate standard errors.

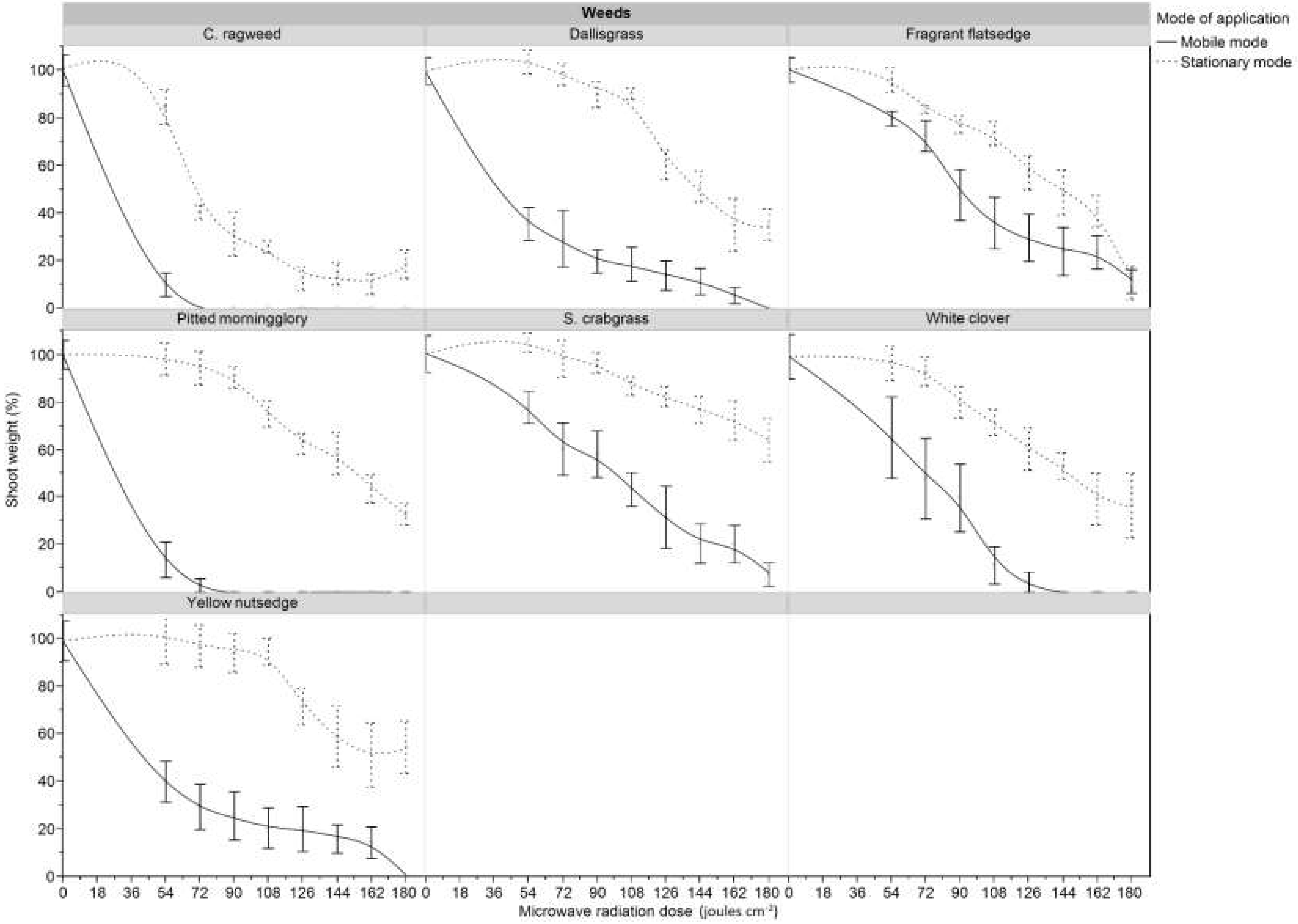
Weeds
C. ragweed
Dallisgrass
Fragrant flatsedge
Pitted morningglory
S. crabgrass
White clover
Yellow nutsedge
Mode of application
Mobile mode
Stationary mode
Shoot weight (%)
0
20
40
60
80
100
0
18
36
54
72
90
108
126
144
162
180
Microwave radiation dose (joules cm⁻²)

Figure 4. Influence of microwave radiation applied using a mobile and a stationary system on shoot weight of different weed species at 4 WAT in the study conducted in a greenhouse. Error bars indicate standard errors.

Table 1: Dose response analysis of microwave radiation applied to different weed species using a stationary (SM) and a mobile (MM) system in greenhouse trials.

S. No.	**Weeds**	**Mode**	**Logit Equation**	**LD_{50}**	**95% Confidence Limit**	
				Joules cm^{-2}	**Min**	**Max**
1	Pitted morningglory	SM	$Z = -19.7283 + 4.0012\ X$	138.4	136.3	140.6
2	Pitted morningglory	MM	$Z = -21.1432 + 5.8651\ X$	36.8	32.8	39.8
3	White clover	SM	$Z = -20.3501 + 4.0345\ X$	155.1	152.4	158.1
4	White clover	MM	$Z = -10.0375 + 2.8343\ X$	34.5	30.3	38.1
5	Common ragweed	SM	$Z = -13.8151 + 3.3151\ X$	64.5	62.6	66.4
6	Common ragweed	MM	$Z = -16.8028 + 4.8839\ X$	31.2	26.3	35.1
7	Fragrant flatsedge	SM	$Z = -12.3981 + 2.5922\ X$	119.4	116.9	122.1
8	Fragrant flatsedge	MM	$Z = -10.5893 + 2.4302\ X$	78.1	75.7	80.2
9	Yellow nutsedge	SM	$Z = -22.1804 + 4.4514\ X$	145.9	143.8	148.1
10	Yellow nutsedge	MM	$Z = -5.4714 + 1.6214\ X$	29.2	24.3	33.6
11	Dallisgrass	SM	$Z = -25.0934 + 5.1071\ X$	136.1	134.4	137.8
12	Dallisgrass	MM	$Z = -6.6493 + 1.8809\ X$	34.3	30.2	38.0
13	Southern crabgrass	SM	$Z = -15.9159 + 3.0583\ X$	182.0	176.3	189.0
14	Southern crabgrass	MM	$Z = -10.3655 + 2.4438\ X$	69.5	67.1	71.8

Chapter 2

Responses of ten weed species to microwave radiation as affected by plant age

Aman Rana and Jeffrey F. Derr*

Abstract

The use of pesticides has raised questions on potential adverse impacts to the environment. There is a demand for alternatives to chemical control, especially among those interested in organic approaches. The use of microwave radiation as a weed control method appears to be a good alternative because they do not produce chemical residues in the environment. Research was conducted to determine the impact of plant age on weed control using microwave radiation. Ten weed species representing monocots and dicots were selected for this study: southern crabgrass, dallisgrass, yellow nutsedge, fragrant flatsedge, false green kyllinga, common ragweed, field bindweed, henbit, white clover, and pitted morningglory. In general, weed species become more tolerant of microwave treatments as they increased in size. Grasses showed slightly more tolerance to microwave treatments in comparison to broadleaf weeds. Older weeds (8 to10 weeks) showed more tolerance to microwave treatments in comparison to 4 to 6 weeks-old weed plants. Most grasses regrew when treated at 90 and 180 joules cm^{-2} of microwave radiation. Pitted morningglory and common ragweed showed the highest susceptibility to microwave radiation among all treated weed species. The increase in a weed's biomass over time probably increases the amount of microwave radiation necessary for heating samples to the thermal threshold required for control.

Nomenclature: Southern crabgrass, *Digitaria ciliaris* (Retz.) Koeler; dallisgrass, *Paspalum dilatatum* Poir.; false green kyllinga, *Kyllinga gracillima* Miquel; fragrant flatsedge, *Cyperus odoratus* L.; yellow nutsedge, *Cyperus esculentus* L.; common ragweed, *Ambrosia artemisiifolia*

L.; white clover, *Trifolium repens* L.; pitted morningglory, *Ipomoea lacunosa* L.; henbit, *Lamium amplexicaule* L. and field bindweed, *Convolvulus arvensis* L.

Key words: Nonchemical weed control, weed age, weed maturity, thermal weed control.

* Graduate Student and Professor, Hampton Road Agricultural Research & Extension Center (HRAREC), 1444 Diamond Springs Road, Virginia Beach, VA 23455. Corresponding author's E-mail: jderr@vt.edu.

Introduction

The main objective of weed control in cropping systems is to prevent competition with the crop being produced (Brown et al. 1957; Davis et al. 1971; Menges and Wayland 1974). Controlling undesirable weeds lowers the risk of crop production losses in terms of both quantity and quality. Chemical control has been the primary method to control weeds in the last 50 years due to its high efficiency (Nelson 1996). Herbicides have the biggest share (68%) in the pesticide market followed by fungicides (9%) and insecticides (3.2%) [NASS 2006]. Approximately, 113.4 million kilograms of herbicides (ai) are sold yearly in the United States. The use of pesticides has raised questions on potential adverse impacts to the environment. Chemical control practices can cause environmental concerns related to human health and to sustainability, especially, in undeveloped and developing countries where the regulatory system is impaired. For example, paraquat, a quaternary ammonium bipyridyl herbicide, produces degenerative lesions in the lung after systemic administration to man and animals (Bus and Gibson 1984). The potential for herbicide carryover injury to rotational or replant crops are another concern. These problems occur because some chemicals leave residues with long persistence (Morozov et al. 1999) that can injure subsequent crops.

Interest in nonchemical weed control has been increasing with the spread of herbicide-resistant biotypes (Heap 1997) and because of environmental concerns over herbicide use (Sartorato et al. 2006). There is a demand for alternatives to chemical control, especially among those interested in organic approaches. The search for alternatives to chemical weed control is an important challenge for research and has led to the development of diverse methods of elimination. The use of thermal methods appears to be a good alternative because they do not produce chemical residues in the environment (Nelson 1985; Olsen and Hammer 1982).

Weed control using microwave radiation is a thermal method. Thermal weed control methods generate heat to kill weed-seed and emerged weeds (Bond et al. 2007). Techniques include soil solarization (Horowitz et al. 1983), flame weeding (Ascard 1990), infrared radiation (Ascard 1998), steaming and hot water (Anon 1999; Trotter 1991), direct heat (Hopkins 1936), electrocution (Vigneault et al. 1990), microwave radiation, electrostatic fields (Diprose et al. 1984), γ-irradiation (Suss and Bacthaler 1968), lasers (Couch and Gangstad 1974), and ultraviolet light (Andreasen et al. 1999). Thermal control methods can be divided in two groups according to their mode of action: (a) direct heating methods using flame, infrared, hot water, steaming, hot air etc. and (b) indirect heating methods which includes electrocution, microwaves, laser radiation and ultraviolet radiation. All thermal weed control methods denaturize proteins by heat (Parish 1990), resulting in loss of cell function, causing intracellular water expansion (Lague et al. 2001), and rupturing membranes (Morelle 1993; Pelletier et al. 1995) to ultimately render death to emerged weeds or weed seed (Heiniger 1999; Rahkonen and Jokela 2003; Rifai et al. 1996).

Microwaves radiations are electromagnetic waves with frequencies ranging from about 300 MHz to 300 GHz and corresponding wavelengths from 0.001 to 1 m (Decareau 1985).

Microwave heating is based on the transformation of electromagnetic field energy into thermal energy by affecting polar molecules of a material. Microwave radiation is in the central portion of the non-ionizing region of the electromagnetic spectrum. The ability of microwave radiation to penetrate and couple with polar molecules such as water provides an excellent means of obtaining controlled and precise heating of undesired plants. Absorption of microwave radiation causes water molecules within the tissue to oscillate, thereby converting electromagnetic energy into heat. This technique is rapid, versatile and effective, as the electromagnetic waves heat the plant tissue and destroy cellular integrity. Microwave-based weed control methods work via a the systematic increase of temperature due to dielectric heating, reaching beyond biological limits to eliminate or suppress unwanted vegetation and some pathogenic agents that can exist near the ground surface (Barker and Craker 1991; Diprose et al. 1984; Fujiwara et al. 1983). The use of microwave energy has been proposed frequently as an alternative method for controlling pests such as weeds, insects, and soil borne plant pathogens. This dielectric heating has been exploited to kill weeds, seed (Barker & Craker 1991; Davis et al. 1971; Sartorato et al. 2006) and insects (Nelson 1996). The most important characteristic of microwave heating is that materials absorb microwave energy directly and internally and convert it into heat (Mullin 1995). Since this heating depends upon the dielectric properties of the plant tissues, there is a possibility of advantageous selective heating in mixtures of different plant species based on anatomy and age, for example. When the ground is irradiated with microwaves, water that exists in soil pores is heated (Krasewski and Nelson 1995; Menges and Wayland 1974).

Few researchers have investigated the effects of microwave radiation on weed seed, plants and other soil organisms. Heating from microwave radiation depends on the power density of the radiation and the electrical properties of the targets. Factors such as size of seed and plants, shape, and moisture content are important, as are the properties of the soil (Kaleita et al. 2005). Although microwaves can be effective in killing seed that are buried several centimeters deep in soil, high power and long irradiation periods are required. Regardless, microwave treatment may prove better than flame guns for destroying weed seed that can withstand high temperatures (Sampson and Parker 1930). Several patents dealing with microwave treatment of weeds and their seed have been registered (Clark and Kissell 2003; Grigorov 2003; Haller 2002); however none of these systems appear to have been commercially developed due to concerns about the energy requirements of microwave energy applicators. Nelson (1996) and Brodie et al. (2007) concluded that seed susceptibility to damage from microwave treatment is a purely thermal effect. Experience to date confirms that microwaves can kill a range of weed seed in the soil (Barker and Craker 1991; Brodie et al. 2009; Davis 1973; Davis et al. 1971), however fewer studies have considered the efficacy of using microwave energy to control emerged weeds.

Several related studies indicate plant developmental stage at the time of treatment is an important factor for weed control (Ascard 1994; 1998; Casini et al. 1993; Daar 1994; Hansson & Ascard 2002; Parish 1989, 1990). Treatment at an early developmental stage reduced input energy requirements and lowered the operational cost. There is a continuous dry mass accumulation and reduction in water content as plants mature, so more microwave energy is needed to control weeds as they grow. However, leaf surface area also increases as plants grow, thus potentially increasing the interception of microwave radiation. An increase in surface area should improve irradiation interception control but an increase in biomass should adversely affect weed control using microwave radiation. The objective of this investigation was to determine the impact of plant size on weed control using microwave radiation.

Materials and Methods

Studies were conducted in a greenhouse at the Hampton Road Agricultural Research and Extension Center (HRAREC), Virginia Beach using a conveyer system. A non-motorized treadmill, (Model No. WLTL23180, Weslo, 1500 South 1000 West Logan, UT 84321) was used as a base. An 115V, geared motor with torque 44 N.mm, (Model No. 2Z797D, Dayton, 5959 W Howard St. Niles, IL 60714), was used to drive the treadmill belt system at a desired speed. A potentiometer, (Model No. 1LS1I1, Levitop, 20497 SW Teton Avenue Tualatin, OR 97062), was used to control the rotations per minute (RPM) of the geared motor. Total microwave irradiation period of a weed was controlled by regulating the speed of the geared motor. A rectangular tunnel was made of cardboard with dimensions 120 cm in length, width 15 cm, and 25 cm in height. This cardboard tunnel was insulated inside with aluminum tape to avoid unwanted leakage of microwave radiation during operation (Fig. 1). Two magnetrons, (Model No. 2M246, LG, 10225 Willow Creek Road, San Diego CA 92131) of output power 900 watt, extracted from microwave ovens, were fitted in the middle of the tunnel using suspension wire and a support frame made of PVC pipes. These two magnetrons were properly wired with corresponding capacitors (Model No. CH2100954C8N, LG, 10225 Willow Creek Road, San Diego CA 92131), diodes and a high voltage transformer (Model No. CBJ72, Samsung, 85 Challenger Road, Ridgefield Park, NJ 07660) as per specifications provided by the manufacturer. These parts were also extracted from the same microwave ovens as the magnetrons. Magnetrons were tested using the international IEC-705 standard (James at al. 2002). In this methodology, cold (10 ± 2 C) potable water is heated in a glass container of certain parameters and the time to a 10 ± 2 C elevation of water temperature is measured. The microwave power absorbed in the water during the heating and used for its temperature elevation is calculated using following equation.

$\Delta T = (P \times t)/(V \times cp \times \rho)$

where: ΔT – the increase of the mean temperature of the heated water (K),

P – microwave power used for heating (W),

V – volume (m^3),

cp - heat capacity (joules kg^{-1} K^{-1}),

ρ -density (kg m^{-3}),

t – time of heating (s)

The magnetrons used for this research were approximately 65% efficient in converting electric energy into microwave energy. The remaining energy (35%) is converted into heat that may damage magnetrons. Two electric fans (Model No. A-239, General Electric, 3135 Easton Tpke Fairfield, Connecticut 06825) attached to a tripod were used to cool the magnetrons during weed treatment. Four aluminum doors, two at inlet and two at exit, were installed in such a way that only one door open at a time as potted plants were passed into chamber. This design increased the safety level for the operator. Since microwaves can pass through nylon belts and the wooden frame of a treadmill, a tray filled with water was used underneath the conveyer to absorb the residual energy leftover during weed treatment with microwave radiation. This technique also protected the applicator from floor-reflected microwave radiation, thus making for a safer working environment. In general, a magnetron needs a critical temperature to produce microwave radiation optimally. Magnetrons were preheated for one minute before treatment started to ensure efficient operation. Greenhouse temperature was approximately 32 to 35 C during each experiment. A microwave-radiation leakage detector (Model No. DT-2G, Shenzhen Everbest Machinery Industry Co., Ltd. 19th Building, 5th Region, Baiwangxin Industry Park,Baimang, Xili, Nanshan, Shenzhen, China P.C. 518108), with sensitivity range 0 to 9.99

mW cm^{-2} and a warning value set at 5.0 mW cm^{-2}, was used to find any microwave leakage during operation as well as to determine safe distances for human operators.

Ten weed species representing monocots and dicots were selected for this study: southern crabgrass, dallisgrass, yellow nutsedge, fragrant flatsedge, false green kyllinga, common ragweed, field bindweed, henbit, white clover, and pitted morningglory. These weeds were selected based on their anatomical diversity. The assumption was that a wider plant canopy would intercept more microwave radiation. Plant canopy area varied among the weed species and the angle of inclination of microwave radiation on the canopy was different for upright versus prostrate weeds. Grasses and sedges were 12 to 15 cm tall at the time of treatment for the early growth stage. Common ragweed plants were 12 to 18 cm tall. Pitted morning glory and field bindweed were in the first true leaf stage. White clover and henbit were 8 to 12 cm tall. These weeds were grown from seed to achieve uniformity. After 4 to 6 weeks, uniformly-sized weeds were transplanted to 10 by 10 cm pots containing a peat-based professional growing medium (ProMix, 1 Avenue Premier Rivière-du-Loup, Québec, Canada G5R 6C1). For the later growth stage, 8 to 12 week old plants were treated. Grasses and sedges were 20 to 25 cm tall at the time of treatment for the later growth stage. Common ragweed plants were 25 to 28 cm tall. Pitted morningglory and field bindweed were in the 5 to 8 leaf stage. White clover and henbit were 10 to 15 cm tall. Plants were irrigated daily and a polymer-coated slow-release fertilizer (14-14-14, Scotts, 14111 Scottslawn Road, Marysville, OH 43040), was applied at 5 g per pot. A randomized complete block design with four replications for each treatment was used for each study. Two microwave energy doses, 5 seconds irradiation delivering 90 joules cm^{-2} and 10 seconds irradiation delivering 180 joules cm^{-2} were used for this study. After microwave treatment, these weeds were transferred to greenhouse benches and irrigated daily. Injury was evaluated visually on a weekly basis for four weeks. Shoot fresh weight was recorded at 4 weeks after treatment (WAT). Since the species varied in their shoot weight, data was converted into percent of non-treated plants for that species. Collected data were analyzed using statistical software (JMP 10, SAS, 100 SAS Campus Drive Building T Cary, NC 27513). Student's t test was used for mean separation. Each study was repeated twice and there was no significant trial by treatment interaction. Therefore, presented results were averaged across both trials. There were three way interactions between microwave dose, weed species and plant age. Therefore, monocots and dicots weed species treated with 90 and 180 joules cm^{-2} were analyzed separately.

Results and Discussion

There was a significant effect of weed age on injury caused by microwave radiation at 90 joules cm^{-2} (Fig. 2). False-green kyllinga showed the highest decline in injury as plants grew larger, with 97% injury to 4 to 6 week old weed plants compared to 56% for 8 to 10 week old weed plants. A similar response to plant size was seen for dallisgrass (93% versus 59%) and southern crabgrass (97% to 77%) respectively, at 1 WAT for plants treated at the 4 to 6 and 8 to 10 week age groups. A lesser effect of plant size was observed in fragrant flatsedge (100% versus 90%) and yellow nutsedge (95% versus 84%), respectively, one week after application for plants treated at the 4 to 6 and 8 to 10 week age groups. Similar results were seen in shoot fresh weight, where 93% reduction in weight was seen at 4 to 6 week old plants compared to 40% reduction in 8 to 10 week old false-green kyllinga plants. Four to six week old fragrant flatsedge plants did not show any regrowth but 8 to 10 week old plants did, although shoot weight was only 25% of the weight of nontreated plants. Greater reduction in shoot weight of southern crabgrass plants was observed for 4 to 6 week old plants compared to 8 to 10 week old ones. Shoot weight for 4 to 6 and 8 to 10 week old yellow nutsedge plants was 27% and 37% of nontreated plants, respectively. Of the species treated, dallisgrass had the lowest percent reduction in shoot weight after application of 90 joules cm^{-2} regardless of plant age. Four to six week old pitted morningglory, common ragweed and field bindweed plants were injured 100% one week after the microwave treatment, with 98% injury seen in henbit and 92% injury to white clover (Fig. 3). Lower injuries were reported in 8 to 10 week old broadleaf weeds except for pitted morningglory, where no differences in injury were seen with respect to age. The decline in injury seen in 8 to 10 week old plants compared to 4-6 week old plants was lower in henbit and common ragweed, with a greater decline seen in field bindweed and white clover. Similar results were seen in shoot weight at 4 WAT. Four to six week old pitted morningglory and common ragweed did not show any regrowth. A low shoot fresh weight, ranging from 10 to 24% of untreated plants, was seen in 4 to 6 week old common ragweed, white clover, field bindweed, and henbit. Highest shoot weight for 4 to 6 week old treated plants was observed in field bindweed (59% of nontreated plants) followed by white clover (38% of nontreated).

A higher dose (180 joules cm^{-2}) of microwave radiation was sufficient for controlling both 4 to 6 week old and 8 to 10 week old monocots (Fig. 4). Four to six week old plants of false-green kyllinga, fragrant flatsedge, yellow nutsedge, dallisgrass, and southern crabgrass were injured 97 to 100% while 8-10 week old plants were injured 98% and 97% at 1 WAT. Injury did not decline below 94% for 8 to 10 week old treated plants regardless of weed species. All 4 to 6 week old broadleaf weeds treated with 180 joules cm^{-2} of microwave radiation showed at least 97% injury (97%) (Fig. 5). However, injury was approximately 85% for 8 to10 week old field bindweed and white clover plants treated with 180 joules cm^{-2} of microwave treatment. Common ragweed, henbit and pitted morningglory did not show any decline in control with respect to plants age at the higher dose. The 4 to 6 week old broadleaf plants showed little to no regrowth. However, significant regrowth was seen when 8 to 10 week old plants of field bindweed and white clover were treated.

Mature plants showed more tolerance to microwave treatment in comparison to young plants regardless of species. More biomass accumulates as plants grow. The root system of plants becomes more robust to protect plants from biotic & abiotic stresses. More energy is therefore needed to control mature plants in comparison to young plants. Davis et al. (1971) reported snap bean (*Phaseolus vulgaris*) and honey mesquite (*Prosopis glandulosa* Torr.) showed greater injury when younger plants were treated with microwave radiation. Snap bean plants were several times more susceptible to microwave treatment than honey mesquite plants. Wayland et al. (1975) field tested a mobile microwave apparatus and found grasses were more tolerant than broadleaf species.

The effect of a microwave treatment in field conditions depends not only on the total energy of the microwave flux, but also on plant size and the orientation of the electrical field of the flux in relation to the soil surface and plant morphology. This provides researchers an opportunity to look further for selective weed control using microwave technology. Preemergence weed control requires a huge amount of energy due to the high microwave attenuation of the soil (Gracia-Lo´pez and Vela´zquez-Martı´ 2002; Vela´zquez-Martı´ et al. 2005). But the radiation energy necessary for elimination of emerged vegetation can be less due to the high water content in their structures. Also, no attenuation exists in the radiation path from the magnetron to the leaves of emerged weeds. Sivesind et al. (2009) studied the response of barnyardgrass, [*Echinochloa crus-galli* (L.) Beauv. ECHCG]; common lambsquarters, (*Chenopodium album* L. CHEAL); redroot pigweed, (*Amaranthus retroflexus* L. AMARE); shepherd's-purse, [*Capsella bursa-pastoris* (L.) Medik. CAPBP]; and yellow foxtail, [*Setaria* *pumila* (Poir.) Roemer and J.A. Schultes SETLU] to flame weeding at different developmental stages. Dose-response curves generated by species and growth stage showed dicot species were more effectively controlled than monocot species. Common lambsquarters was susceptible to flame treatment with doses required for 95% control (LD_{95}) ranging from 0.9 to 3.3 kg km^{-1} of propane with increasing maturity stage. Comparable levels of control in redroot pigweed required higher doses than common lambsquarters, but adequate control was still achieved. Flaming effectively controlled shepherd's-purse at the cotyledon stage (LD_{95} = 1.2 kg km^{-1}). However, the LD_{95} for weeds with two to five leaves increased to 2.5 kg km^{-1}, likely due to the rosette stage of growth, which allowed treated weeds to avoid thermal injury. Control of barnyardgrass and yellow foxtail was poor, with weed survival >50% for all maturity stages and flaming doses tested. Leon and Ferreira (2008) recorded injury caused by steam treatment to leaves of bermudagrass, [*Cynodon dactylon* (L.) Pers.]; common purslane, (*Portulaca oleracea* L.); English daisy, (*Bellis perennis* L.), and perennial ryegrass, (*Lolium perenne* L.), species that differ in leaf morphology. They also determined injury to plants at different stages of plant development. Plants were exposed to steaming at 400 C for 0.36s, equivalent to a steaming speed of 2 km h^{-1}. They found plants with greater leaf thickness had less injury. For broadleaf species only, species with wider leaves were injured more than species with narrower leaves. Injury was greatest when plants had fewer than six true leaves and when their shoots were less than 10 cm long. Brett et al. (2013) reported similar results with dogfennel (*Eupatorium capillifolium* L), as its height was a limiting factor in its control using triclopyr plus fluroxypyr.

Microwave application for weed management has the potential to be competitive compared to alternative methods of control if applied at earlier growth stages of weeds. Several patents dealing with microwave treatment of weeds and their seed have been registered (Clark and Kissell 2003; Grigorov 2003; Haller 2002;); however none of these systems appear to have been commercially developed due to concerns about the energy requirements of microwave energy applicator. This hurdle can be solved out using an appropriate design of microwave applicator. Few studies have considered the efficacy of microwave treatments (Ascard 1994; Kolberg and Wiles 2002), focusing on optimization of microwave radiation use (Ascard 1995; 1997; Hansson & Ascard 2002; Hansson & Mattsson 2002, 2003), or comparing different methods of microwave radiation applications (Ascard 1998), which needs to be further investigated.

Acknowledgements

The authors want to thanks all faculty and staff of Hampton Road Agricultural Research and Extension center (HRAREC), for providing necessary resources and help to complete this study.

Literature Cited

Andreasen C, Hansen L, Streibig JC (1999) The effect of ultraviolet radiation on the fresh weight of some weeds and crops. Weed Technol 13:554-560

Annon (1999) Something for strawberry growers to get steamed up about. The Fruit Grower. April. 11-12

Ascard J (1998) Comparison of flaming and infrared radiation techniques for thermal weed control. Weed Res 38:69–76

Ascard J (1997) Flame weeding: effects of fuel pressure and tandem burners. Weed Res 37:77-86

Ascard J (1995) Effects of flame weeding on weed species at different developmental stages. Weed Res 35:397-411

Ascard J (1994) Dose response models for flame weeding in relation to plant size and density. Weed Res 34:377- 385

Ascard, J (1990) Thermal weed control with flaming in onions. Pages 175-188 *in* Proc 3rd Intl Conf on Non-chemical Weed Control. Linz, Austria

Barker AV, Craker LE (1991) Inhibition of weed seed germination by microwaves. Agron J 83:302-305

Bond W, Davies G, Turner RJ (2007) A review of thermal weed control. Technical Report. HDRA, Ryton Organic Gardens, CV8 3LG, Coventry, UK

Brett D. Craigmyle, Jeffrey M. Ellis and Kevin W. Bradley (2013) Influence of Weed Height and Glufosinate plus 2,4-D Combinations on Weed Control in Soybean with Resistance to 2,4-D. Weed Technol 27:2, 271-280

Brodie G, Botta C, Woodworth J (2007) Preliminary investigation into microwave soil pasteurization using wheat as a test species. Plant Protection Quarterly. 22:72-75

Brodie G, Harris G, Pasma L, Travers A, Leyson D, Lancaster C, Woodworth J (2009) Microwave soil heating for controlling ryegrass seed germination. Trans. ASABE. 52: 295-302

Brown OA, Stone RB, Andrews H (1957) Low energy irradiation of seed lots. Agricultural Eng, Sept. 38:666-669

Bus JS, Gibson JE. (1984) Paraquat: model for oxidant-initiated toxicity. Environmental Health Perspectives. 55:37-46.

Casini P, Calama P Vecchio V (1993) Flame weeding research in Italy. Pages 119-125 *in* Communications 4th Intl. Conf. IFOAM, Non-chemical Weed Control (ed. JM Thomas) Association Colleque IFOAM, Dijon, France

Clark WJ, Kissell CW (2003) System and Method for In Situ Soil Sterilization, Insect Extermination and Weed Killing. Patent No. 20030215354A1

Couch R, Gangstad EO (1974) Response of water hyacinth to laser radiation. Weed Sci 22:450-453

Daar S (1994) New technology harnesses hot water to kill weeds. The IPM Practioner. 16:1–5

Davis FS, Wayland JR, Merkle MG (1973) Phytotoxicity of a UHF Electromagnetic Field. Nature 241: 291-292

Davis F, Wayland J, Merkle M (1971) Ultrahigh-frequency electromagnetic fields for weed control: phytotoxicity and selectivity. Sci 173:535–537

Decareau RV (1985) Microwaves in the Food Processing Industry. Academic Press Inc., Natick, MA

Diprose MF, Benson FA, Willis AJ (1984) The effect of externally applied electrostatic fields, microwave radiation and electric currents on plants and other organisms, with special reference to weed control. Botanical Rev. 50:171–223

Fujiwara O, Goto Y, Amemiya Y (1983). Characteristics of microwave power absorption in an insect exposed to standing-wave fields. Electronics and Commun. in Japan. 66:46–54

Gracia-Lo´ pez C, Vela´ zquez-Martı´ B (2002) Effects of microwave energy for agricultural soil processing. Abstracts of Intl. Conf. on Agricultural Eng, AgEng. Budapest, Hungary, July 1–4. P. 48–50

Grigorov GR (2003) Method and System for Exterminating Pests, Weeds and Pathogens. Patent No. 20030037482A1, United States. http://www.google.com/patents/US6647661 Accessed February 15, 2014

Haller HE (2002) Microwave Energy Applicator. Patent No. 20020090268A1 https://www.google.com/patents/US20020090268?dq=Microwave+Energy+Applicator.+Patent+No.+20020090268A1&hl=en&sa=X&ei=XFwcVf-BC8qkgwTP34GoBA&ved=0CB4Q6AEwAA Accessed February 15, 2014

Hansson D, Mattsson JE (2002) Effect of drop size, water flow, wetting agent and water temperature on hot water weeds control. Crop Protection 21:773–781

Hansson D, Ascard J (2002) Influence of developmental stage and time of assessment on hot water weed control. Weed Res 42:307–316

Hansson D, Mattsson JE (2003) Effects of air temperature, rain and drought on hot water weed control. Weed Res 43:245–251

Heap IM (1997) The occurrence of herbicide-resistant weeds worldwide. Pesticide Sci 51:235-243

Heiniger RW (1999) Controlling weeds in organic crops with flame weeders. Organic Farming Research Foundation. Info Bul 6:17-19

Hopkins CY (1936) Thermal death point of certain weed seeds. Can J Res 14:178-183

Horowitz M, Regev Y, Herzlinger G (1983) Solarization for weed control. Weed Sci. 31:170-179

International Electrotechnical Commission (1988) Methods for Measuring the Performance of Microwave Ovens for Household and Similar Purposes. IEC Publication 705, 2nd edn. Geneva: International Electrotechnical Commission.

James C, Swain MV, James SJ, Swain MJ (2002) Development of methodology for assessing the heating performance of domestic microwave ovens. International Journal of Food Sci and Technol 37:879–892

Kaleita AL, Tian LF, Hirschi MC (2005) Relationship between soil moisture content and soil surface reflectance. Trans. Amer. Soc. Agril. Eng. (ASAE) 48:1979−1986

Kolberg RL, Wiles LJ (2002) Effect of steam application on cropland weeds. Weed Technol 16:43–49

Krasewski AW, Nelson SO (1995) Application of microwave techniques in agricultural research. SBMO/IEEE MTT-S Intl. Microwave and Optoelectronics Conf 117-126

Laguë, Claude, Jacques Gill, and Guy Péloquin. (2001) Thermal control in plant protection. Physical control methods in plant protection. Springer Berlin Heidelberg, 35-46.

Vincent C, Panneton B, Fleurat-Lessard F (Eds.). (2001) Physical control methods in plant protection. Springer Science & Business Media. 329 p

Leon RG Ferreira DT (2008) Interspecific differences in weed susceptibility to steam injury. Weed Technol. 22:719–723

Menges R, Wayland J (1974) UHF electromagnetic energy for weed control in vegetables. Weed Sci 22:584–590

Morelle B (1993) Thermal weed control and its applications in Agriculture and Horticulture Communication of the 4th Intl. Conf. IFOAM, Nonchemical Weed Control. Dijon, France 111-116 p

Morozov GA, Yu Sedelnikov E, Stakhova NE (1999) Microwave seeds treatment. Pages 193-196 *in* Proceedings International Conference of Microwave and High Frequency Heating, Valencia, Spain. Sept 13-17.

Mullin J (1995) Microwave processing. Pages 112–134 in Gould, G.W. (Ed.), New Methods of Food Preservation. Blackie Academic and Professional. Bishopbriggs. Glasgow

NASS (2006) National Agricultural use database. http://www.pestmanagement.info/nass/act_dsp_usage_multiple.cfm. Accessed January 17, 2013

Nelson SO (1985) RF and microwave energy for potential agricultural applications. J Microwave Power 20:65–70

Nelson SO (1996) A review and assessment of microwave energy for soil treatment to control pests. Trans ASAE 39:281–289

Olsen RG, Hammer WC (1982) Thermographic analysis of waveguide-irradiated insect pupae. Radio Sci. 17:95–104

Parish S (1989) Investigations into thermal techniques for weed control. Pages 2151–2156 *in* Proc 11th Intl. Congr on Agric Eng, Rotterdam Balkema

Parish S (1990) A Review of Non-Chemical Weed Control Techniques. Biol Agric and Horti 7:117–137

Pelletier Y, McLeod CD, Bernard G (1995) Description of sub-lethal injuries caused to Colorado potato beetle by propane flamer treatment. J. of Econ. Entomol. 88:1203-1205

Rahkonen J, Jokela H (2003) Infrared radiometry for measuring plant leaf temperature during thermal weed control treatment. Biosyst. Eng. 86:257-266

Rifai MN, Lacko-Bartosova M, Puskarova V (1996) Weed control for organic vegetable farming. Rostl. Vyr. 42:463-466

Sampson AW, Parker KW (1930) St. Johnswort on range lands of California. Univ. Calif. Agric. Exp. Sta. Bull. 503:25-26

Sartorato I, Zanin G, Baldoin C, De Zanche C (2006) Observations on the potential of microwaves for weed control. Weed Res 46:1-9

Sivesind EC, Leblanc ML, Cloutier DC, Seguin P, Stewart KA (2009) Weed response to flame weeding at different developmental stages. Weed Technol 23:438–443

Suss A, Bacthaler G (1968) Preliminary experiments on γ-irradiation of weed seeds. Pages 20-24 *in* Proceedings of the 9th British Weed Control Conference. Brighton, UK.Trotter K (1991) Sidlesham steamers. Grower, Nexus Hort. 116:24-25

Vela´ zquez-Martı´ B, Gracia-Lo´ pez C, Plaza PJ (2005) Determination of dielectric properties in the agricultural soils. Biosystems Eng 91:119–125

Vigneault CD, Benoit L, McLaughlin NB. 1990. Energy aspects of weed electrocution. Rev. Weed Sci. 5:15-26

Wayland J, Merkle M, Davis F, Menges RM, Robinson R (1975) Control of weeds with UHF electromagnetic fields. Weed Res 15:1–5

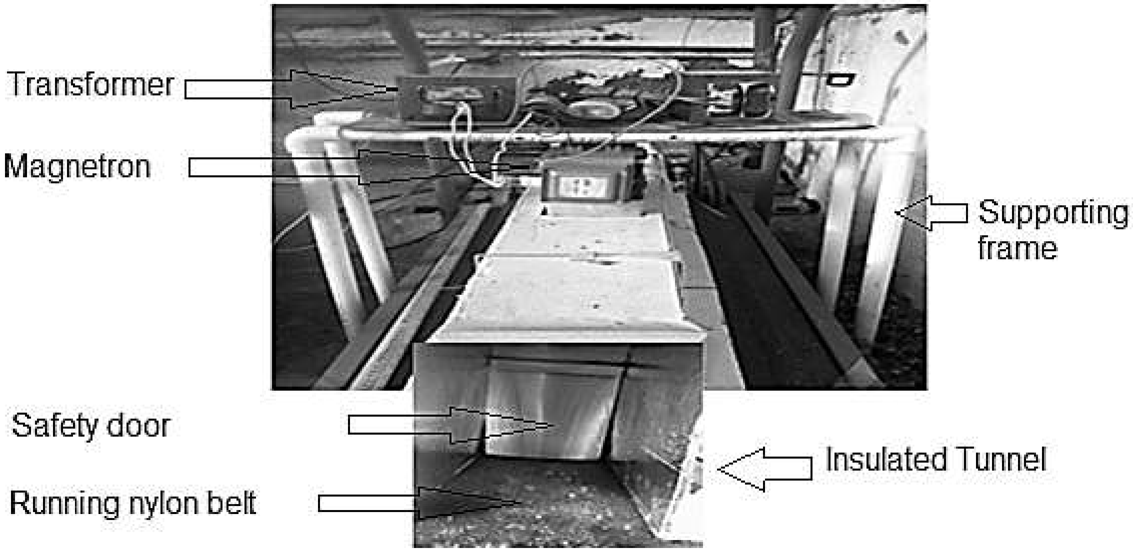

Figure 1. Overview of the mobile microwave applicator used for the greenhouse weed control trials.

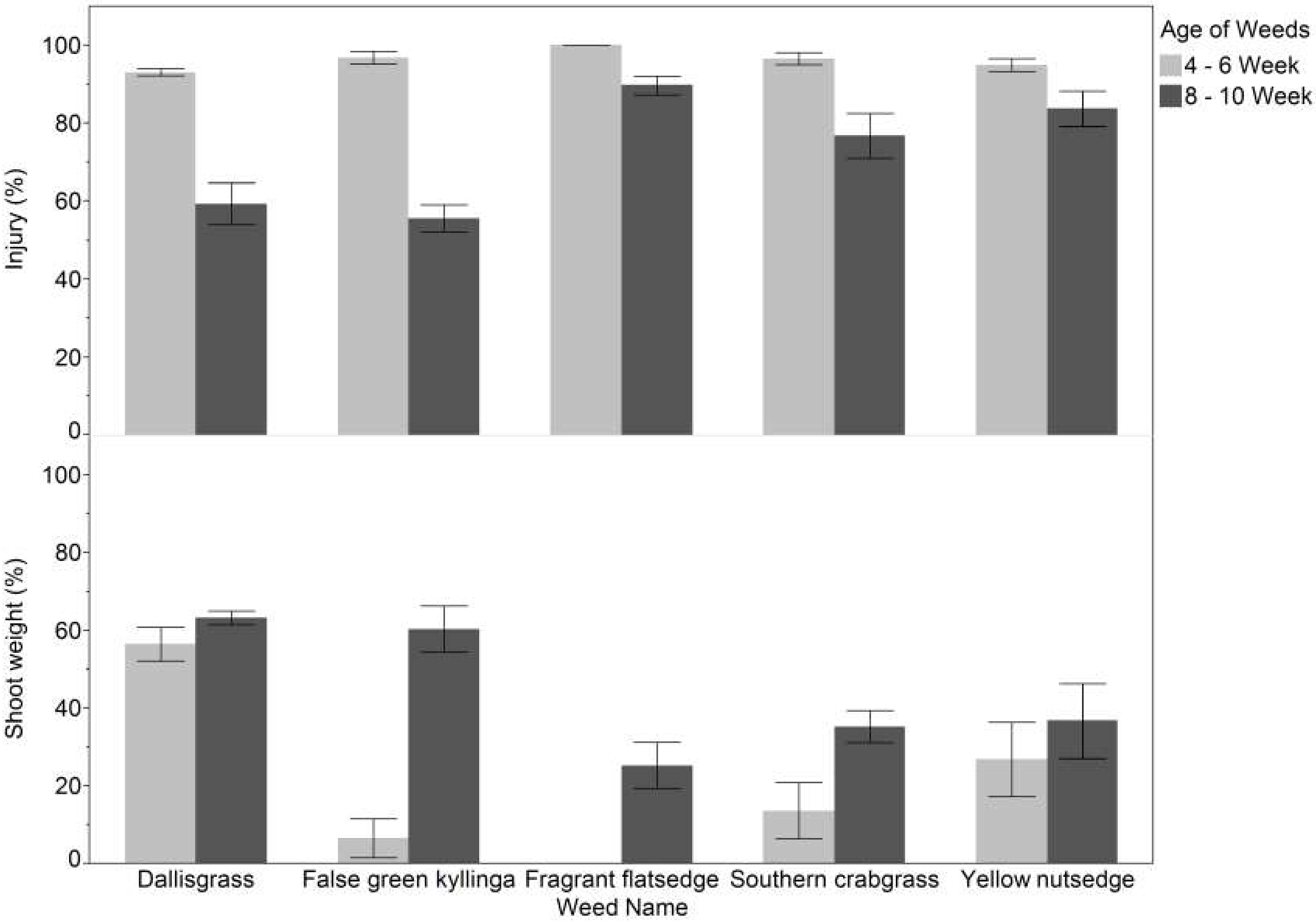
Age of Weeds
4 - 6 Week
8 - 10 Week
Injury (%)
Shoot weight (%)
0
20
40
60
80
100
Dallisgrass
False green kyllinga
Fragrant flatsedge
Southern crabgrass
Yellow nutsedge
Weed Name

Figure 2. Effect of 90 joules cm^{-2} microwave radiation on percent injury at 1 WAT and shoot weight at 4 WAT, expressed as percent of nontreated plants, to monocot weed species at two plant ages in a greenhouse trial. Error bars represents standard error.

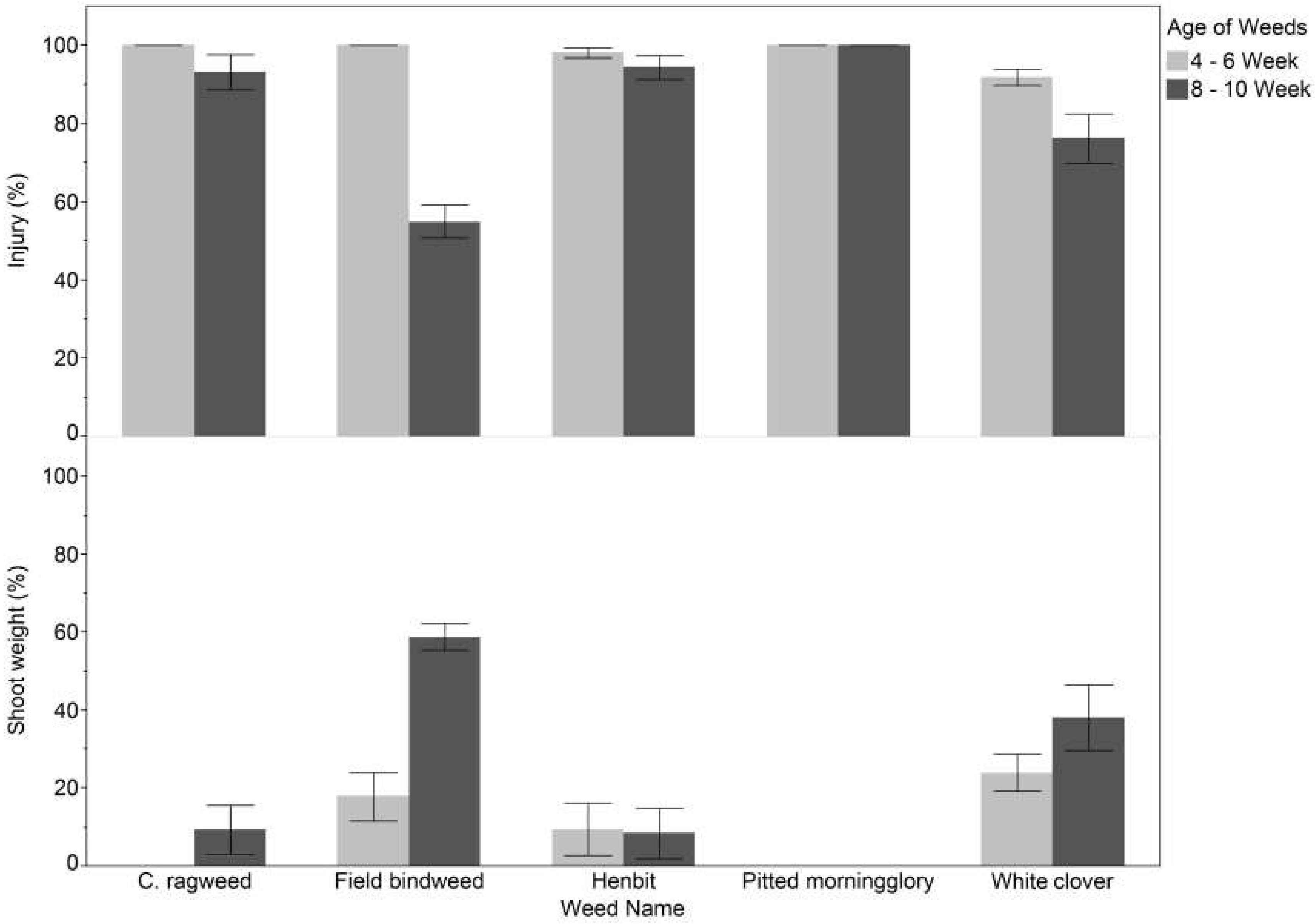
Injury (%)
0
20
40
60
80
100
Shoot weight (%)
0
20
40
60
80
100
Age of Weeds
4 - 6 Week
8 - 10 Week
C. ragweed
Field bindweed
Henbit
Pitted morningglory
White clover
Weed Name

Figure 3. Effect of 90 joules cm^{-2} microwave radiation on percent injury at 1 WAT and shoot weight at 4 WAT, expressed as percent of the weight of nontreated plants, to dicot weed species at two plant ages in a greenhouse trial. Error bars represents standard error.

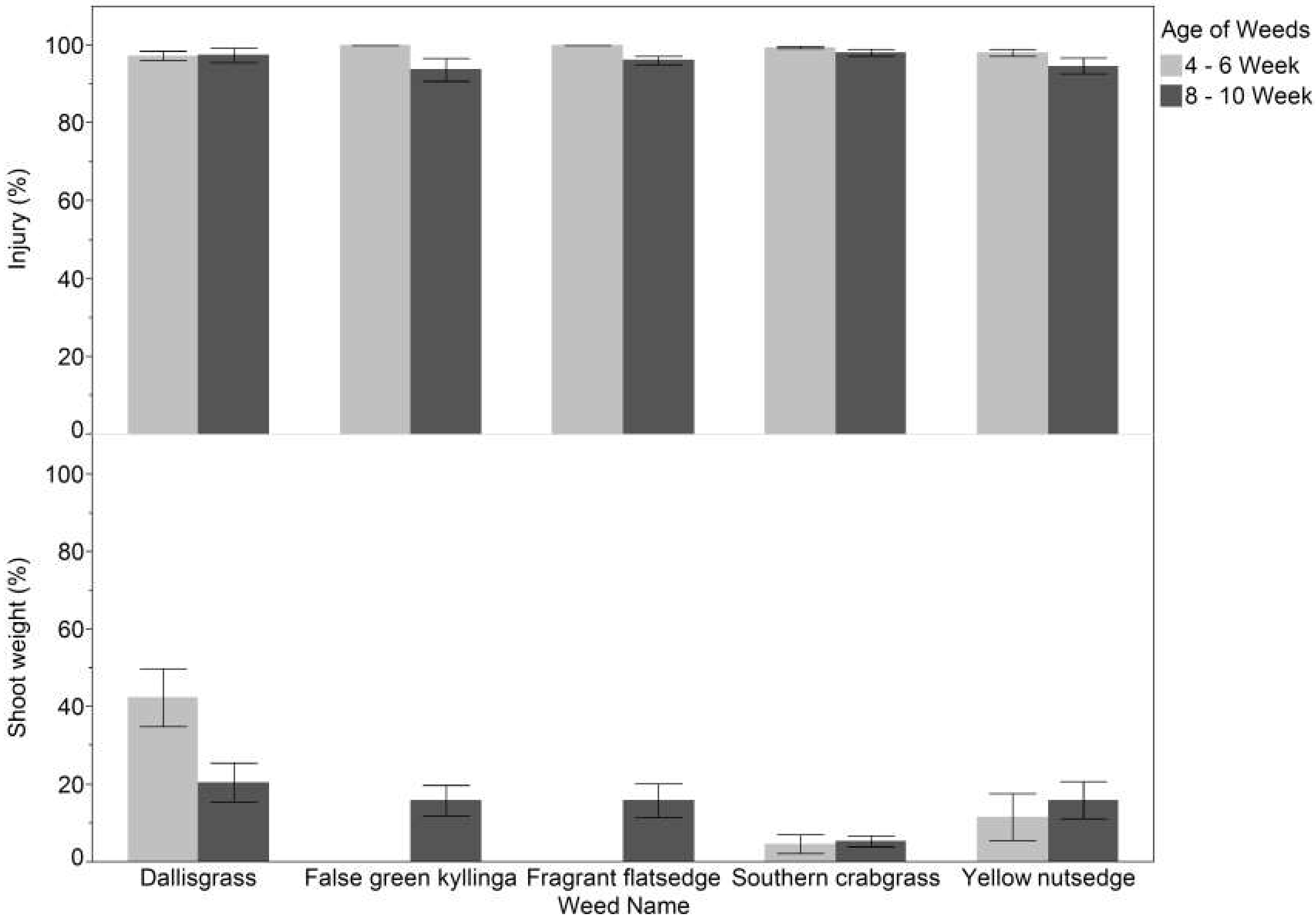
Age of Weeds
4 - 6 Week
8 - 10 Week
Injury (%)
0
20
40
60
80
100
Shoot weight (%)
0
20
40
60
80
100
Dallisgrass
False green kyllinga
Fragrant flatsedge
Southern crabgrass
Yellow nutsedge
Weed Name

Figure 4. Effect of 180 joules cm^{-2} microwave radiation on percent injury at 1 WAT and shoot weight at 4 WAT, expressed as percent of nontreated plants, to monocot weed species at two plant ages in a greenhouse trial. Error bars represents standard error.

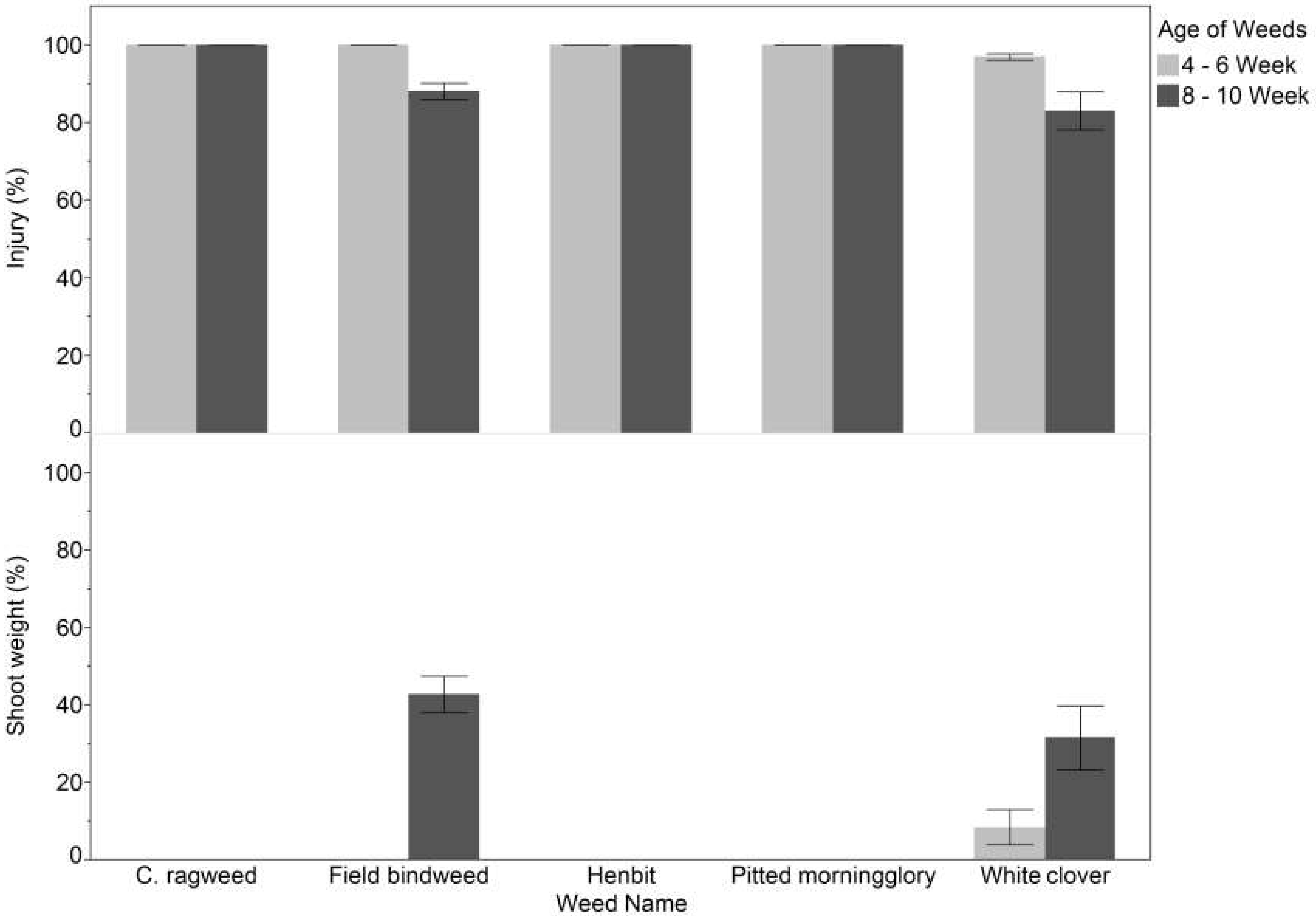
Age of Weeds
4 - 6 Week
8 - 10 Week
Injury (%)
100
80
60
40
20
0
Shoot weight (%)
100
80
60
40
20
0
C. ragweed
Field bindweed
Henbit
Pitted morningglory
White clover
Weed Name

Figure 5. Effect of 180 joules cm^{-2} microwave radiation on percent injury at 1 WAT and shoot weight at 4 WAT, expressed as percent of the weight of nontreated plants, to dicot weed species at two plant ages in a greenhouse trial. Error bars represents standard error.

Chapter 3

Effect of ambient temperature on thermal weed control using microwave radiation

Aman Rana and Jeffrey F. Derr*

Abstract

Weeds exposed to microwave radiation die due to dielectric heating, which elevates the temperature of plant tissue beyond the biological limit for survival. Ambient temperature at application may influence effectiveness of microwave radiation as low temperatures may necessitate higher doses for acceptable weed control. Experiments were conducted in a greenhouse at Virginia Tech's Hampton Road Agricultural Research and Extension Center, Virginia Beach, VA. Different weed species comprising grasses, sedges, and broadleaf weeds were treated with microwave radiation under different ambient air temperatures. Ambient temperature had a significant effect on injury caused by microwave radiation to target weeds, with control increasing as the air temperature increased. Microwave irradiation injured target weeds less when they were treated at 13 C compared to 35 C. Use of microwave radiation for weed control would be more useful in warmer parts of the country, or during the summer compared to winter. Microwave radiation injured broadleaf weeds comparatively more than grasses. Overall, grasses recovered more frequently from microwave injury than broadleaf weeds, probably due to their anatomy.

Nomenclature: Southern crabgrass, *Digitaria ciliaris* (Retz.) Koeler; dallisgrass, *Paspalum dilatatum* Poir.; false green kyllinga, *Kyllinga gracillima* Miquel; fragrant flatsedge, *Cyperus odoratus* L.; yellow nutsedge, *Cyperus esculentus* L.; common ragweed, *Ambrosia artemisiifolia* L.; white clover, *Trifolium repens* L.; pitted morningglory, *Ipomoea lacunosa* L.; henbit, *Lamium amplexicaule* L. and Field bindweed, *Convolvulus arvensis* L.

Key words: Weed management, nonchemical control, thermal weed control, microwave radiation.

* Graduate Student and Professor, Hampton Road Agricultural Research & Extension Center (HRAREC), 1444 Diamond Springs Road, Virginia Beach, VA 23455. Corresponding author's E-mail: jderr@vt.edu.

Introduction

Various alternatives to chemical weed control, including electrocution, flaming, and irradiation, have been evaluated for weed control, but high energy inputs, slow work speed, complexity of the technology and the safety implications for operators have hampered development. For example, using propane torches under dry conditions poses a fire hazard. One potential alternative to herbicide application is the use of microwave radiation, a particular form of indirect thermal weed control. Microwaves are in the central portion of the non-ionizing region of the electromagnetic spectrum, with frequencies ranging from about 300 MHz to 300 GHz and corresponding wavelengths from 0.001 to 1 m (Decareau 1985). Microwave heating is based on the ability of microwave radiation to penetrate and couple with polar molecules such as water molecules, causing the molecules to oscillate and produce heat from friction, thus transforming electromagnetic energy into thermal energy (Mullin 1995). This provides an excellent means of obtaining controlled and precise heating of undesired plants as water molecules absorb microwave energy directly and internally. This technique is rapid, versatile and effective, as the electromagnetic waves heat the plant tissue and destroy cellular integrity due to dielectric heating in plant tissues, reaching beyond biological limits to eliminate or suppress unwanted vegetation (Fujiwara et al. 1983; Diprose et al. 1984; Barker and Craker 1991).

Interest in weed control by microwave treatment started in the early 1970s and hope of commercialization stimulated many experiments in the laboratory and in the field on the lethality to weed seed. The energy of microwaves can control a broad spectrum of soil fungi, nematodes, insects, parasites and weed seed (Barker & Craker 1991; Bhaskara et al. 1998; Davis et al. 1971; Ferriss 1984; Lozano et al. 1986; Mavrogianopoulos et al. 2000; Reddy et al. 1999; Sartorato et al. 2006; Soriano et al. 2006) and insects (Nelson 1996). Several related studies indicate plant developmental stage at the time of treatment is an important factor for postemergence weed control (Ascard 1994, 1998; Casini et al. 1993; Daar 1994; Hansson and Ascard 2002; Parish 1989, 1990). Dielectric heating depends on the power density of the microwave radiation and the dielectric properties of the target. Factors such as size of seed and plants, shape, and moisture content are important, as are the properties of the soil. Although microwaves can be effective in controlling weed seed that are buried several centimeters deep in soil, high power is required with a long irradiation period. Microwave treatment may prove better than flame guns for destroying weed seed that can withstand high temperatures (Sampson and Parker 1930).

Weather may impact the effectiveness of microwave treatment. Ambient air temperature could serve as a limiting factor for weed control using microwave radiation. Thermal injury caused by microwave radiation is the result of rise in temperature of plant tissue. More energy may be needed if plant tissues are at a lower temperature. Use of this technology can be made comparatively more efficient by selecting the optimum temperature and irradiation period. The assumption for this research was that ambient temperature would play a crucial role in thermal weed control approach. The objective of this study was to investigate the effect of ambient air temperature on thermal weed control using microwave radiation.

Materials and Methods

This experiment was conducted at Virginia Tech's Hampton Road Agricultural Research and Extension Center (HRAREC), Virginia Beach, VA. To eliminate the gap between energizing the magnetrons and actual microwave radiation produced, a conveyer was built. A non-motorized treadmill, (Model No. WLTL23180, Weslo, 1500 South 1000 West Logan, UT 84321) was used as a base. An 115V, geared motor with torque 44 N.mm, (Model No. 2Z797D, Dayton, 5959 W Howard St. Niles, IL 60714), was used to drive the treadmill belt system at a desired speed. A potentiometer, (Model No. 1LS1I1, Levitop, 20497 SW Teton Avenue Tualatin, OR 97062) was used to control the rotations per minute (RPM) of geared motor. A rectangular tunnel was made of cardboard with dimensions 120 cm in length, width 15 cm, and 25 cm in height. This cardboard tunnel was insulated inside with aluminum tape to avoid unwanted leakage of microwave radiation during operations (Fig. 1a). Speed of the conveyer controlled the total microwave dose applied to the weeds. Microwaves could pass through the nylon belt and wooden frame of the treadmill, so a tray filled with water was used underneath the conveyer to absorb any residual energy that moved through the unit. This technique also protected the applicator from floor-reflected microwave radiation, thus making a safer working environment. Two magnetrons, (Model No. 2M246, LG, 10225 Willow Creek Road, San Diego CA 92131) of output power of 900 watt, extracted from microwave ovens, were fitted in the middle of the tunnel using suspension wire and a support frame made of PVC pipe. These two magnetrons were properly wired with corresponding capacitors (Model No. CH2100954C8N, LG, 10225 Willow Creek Road, San Diego CA 92131), diodes and high voltage transformer (Model No. CBJ72, Samsung, 85 Challenger Road, Ridgefield Park, NJ 07660) as per specifications provided by the manufacturer. These parts were also extracted from the same microwave ovens as the magnetrons. Magnetrons were tested using the InternationalElectrotechnical Commission IEC-705 standard (James at al. 2002). Since September 1990, microwave oven manufacturers have adopted a single standard for measuring the power output for microwave ovens. This standard, uses 1 L water load and the test is made using a cold oven in defined ambient conditions. In this methodology, cold (10 ± 2 C) potable water is heated in glass container of certain parameters and the time to a 10 ± 2 C elevation of water temperature is measured. The microwave power absorbed in the water during the heating and used for its temperature elevation is calculated using following equation.

$$\Delta T = (P \times t)/(V \times cp \times \rho)$$

where: ΔT – the increase of the mean temperature of the heated water (K),

P - microwave power used for heating (W),

V - volume (m^3),

cp - heat capacity (joules kg^{-1} K^{-1}),

ρ - density (kg m^{-3}),

t - time of heating (s)

Magnetrons are approximately 65% efficient in converting electric energy into microwave energy, with the remainder (35%) converted into heat that may damage magnetrons. Two fans attached to a tripod were used to cool the magnetrons during weed treatment. Four aluminum doors, two at the inlet and two at the exit, were installed in such a way that only one door was open at a time as potted plants were passed into the chamber. This design increased the safety level for the operator. One three-phase 220 VAC, 60Hz gasoline generator was selected as the power source to conduct experiments. Two adjacent magnetrons were connected to one generator on a separate phase. In the parallel operation of several magnetrons, the failure of a single microwave source may go unnoticed, compromising the result of the experiment. An efficient and reliable monitor of the operation of each individual magnetron was therefore required. Sometimes a magnetron doesn't produce microwaves efficiently, even though all connections are intact, due to a voltage drop or damaged cathode filament. Amperage load of each magnetron was monitored on a regular basis after each treatment to make sure the unit was running properly. The circuit diagram of the magnetron power supply and corresponding operation monitor is shown in Figure 1b. There was a total of two power supplies and two monitor circuits with two indicator light bulbs, one for each of the two magnetrons. A microwave-radiation leakage detector, (Model No. DT-2G, Shenzhen Everbest Machinery Industry Co., Ltd. 19th Building, 5th Region, Baiwangxin Industry Park,Baimang, Xili, Nanshan, Shenzhen, China P.C. 518108), with sensitivity range 0 to 9.99 mW cm^{-2} and a warning value set at 5.0 mW cm^{-2} was used to find any microwave leakage during operation as well as to determine safe distances for human operators. This study was conducted to evaluate the role of ambient temperature on thermal injuries caused by microwave radiation on broadleaf, grass and sedge weeds. Southern crabgrass, dallisgrass, yellow nutsedge, fragrant flatsedge, falsegreen kyllinga, white clover, field bindweed, henbit, common ragweed and pitted morningglory were used in this study. These weed species were selected based on their anatomical diversity.

All weeds were grown from seed in flats containing a peat-based growing medium (ProMix, 1 Avenue Premier Rivière-du-Loup, Québec, Canada G5R 6C1) in a greenhouse for 3 to 4 weeks then transplanted to 10 by 10 cm pots. At treatment, grasses and sedges were 5 to 12 cm tall and common ragweed plants were 12 to 18 cm tall. Pitted morningglory and field bindweed were in the first true leaf stage. White clover and henbit were 2 to 8 cm tall. These weeds were grown from seed to achieve uniformity. They were irrigated and fertilized as needed using a slow-release fertilizer (Osmocote 14-14-14, Scotts, 14111 Scottslawn Road, Marysville, OH 43040). Weeds were not treated until at least 2 days after transplanting. In this study, there was a factorial arrangement of three ambient air temperatures (13 C, 24 C, and 35 C) and two microwave doses (90 and 180 joules cm^{-2}). A randomized complete block design with four treatments and four replications was used and each study was repeated. Plants were monitored weekly in the greenhouse for four weeks and then shoot fresh weight was recorded. Injury was determined visually on a scale of 0 to 100. Since nontreated plants of the different weed species had a different biomass, data for each treated plant was expressed as the percent of nontreated plants of that species. Data for the weed species were also grouped together and analyzed based on plant family (grass, broadleaf, and sedge). Data was analyzed using statistical software (JMP 10, 100 SAS Campus Drive Building T Cary, NC 27513). Tukey's HSD was used for mean separation. There were no significant differences between the runs of each experiment so data was averaged across the two trials. There were significant three way interactions between the effect of ambient temperature, applied dose and weed species on visual injuries (%) at 1 weeks after treatment (WAT). There was no significant interaction between ambient temperatures, weed species and applied dose for fresh shoot weight at 4 WAT. There were no significant three way interactions between weed type, dose and ambient temperature for injury at 1 WAT and for shoot weight at 4 WAT. There was a significant interaction between ambient temperatures and weed type.

Results and Discussion

Pitted morningglory and common ragweed were the most sensitive species to microwave treatments. Both weed species did not show any differences in their respective injuries due to different ambient temperature at 1 WAT caused by microwave radiation (Fig. 2). No regrowth was seen in pitted morningglory treated with microwave radiation at all three temperatures.

Common ragweed showed regrowth when treated with 90 joules cm^{-2} at 13 C but not at 24 C or 35 C. Of the broadleaf weeds tested, white clover showed the numerically highest differential response to microwave treatments due to ambient temperature. At 90 joules cm^{-2} microwave treatment, only 45% injury was seen in white clover at 13 C but 92% injury was seen at 35 C. A similar results were exhibited by henbit, false green kyllinga, fragrant flatsedge, dallisgrass, yellow nutsedge, southern crabgrass and field bindweed, where plant recovery was observed at the lowest microwave dose and the lowest temperature. In general, all weed species showed comparatively higher injury at 35 C compared to 13 C when treated with 90 joules cm^{-2} microwave energy. Overall, less of a temperature effect was observed at the highest dose of microwave radiation (180 joules cm^{-2}) for most of the tested species. Thus there is a differential response among weed species to microwave treatment, with highly sensitive species like pitted morningglory being controlled over a wide temperature range, while less sensitive species, such as henbit, are best controlled at higher air temperatures. The lower control at lower ambient air temperatures can be addressed, though, by using a higher dose of microwave radiation. As the ambient temperature increased, injury also increased at the 90 joules cm^{-2} dose, probably because less energy is required to reach the threshold temperature when ambient air temperature is higher. More microwave energy would be needed in temperate regions compared the tropical regions, and more energy intensive in spring or fall compared to summer months to achieve similar weed control. A similar response was seen in shoot weight reduction, with in general, lower shoot fresh weights when weeds were treated at higher compared to lower ambient air temperatures (Fig. 3). Figure 4 represents the injury at 1 WAT and shoot fresh weight (%) at 4 WAT pooled across weed type. Comparatively higher shoot weights were recorded in all three types of weeds when treated with both doses of microwave radiation at 13 C, followed by 24 C, with the lowest shoot weights seen at 35 C. There was comparatively lower regrowth noticed in broadleaf weeds when exposed to180 compared to 90 joules cm^{-2} microwave dose. Overall, there was no significant difference in injury caused by microwave radiation to the different weed types. Shoot fresh weights, however, of the broadleaf weeds tested were significantly lower than those for the grasses and sedges when treated with microwave radiation. Wayland et al. (1975) also found grasses were more tolerant of microwave treatments than broadleaf weed species.

Pitted morningglory, common ragweed, and field bindweed were numerically the most sensitive species to microwave applications based on injury and shoot weight reduction (Table 1). Fragrant flatsedge, dallisgrass, falsegreen kyllinga, henbit, and white clover were significantly less sensitive to microwaves compared to common ragweed and pitted morningglory. Field bindweed, southern crabgrass, yellow nutsedge, and fragrant flatsedge were intermediate in sensitivity between these two groups of weeds. A gradual increase in injury was seen as initial ambient temperature at the time of treatment increased. Most of the non-damaged plant parts were noticed near the growing medium surface where energy attenuation is expected to be higher due to the moist surface. To our knowledge, there is no published data by other researchers that documents the impact of ambient temperature on injury caused by microwave radiation to plant tissues. Nalewaja et al. (1991) studied nonselective postemergence herbicide performance during cool temperatures and reported the negative effect of lower temperature on percent reduction in dry weight of green foxtail (*Setaria viridis* L. Beauv.) and redroot pigweed (*Amaranthus retroflexus* L.). Stewart et al. (2009) reported a strong species-specific influence of ambient air temperature, light intensity, and leaf orientation on the efficacy of postemergence herbicides.

The effect of a microwave treatment depends not only on the total energy of the microwave flux, but also on plant size and the orientation of the electrical field of the flux in relation to plant morphology. Wayland et al. (1975) estimated microwave energy densities of 77 to 309 joules cm^{-2} were required for acceptable weed control in postemergence trials. These discrepancies in results may be due to use of non-standardized microwave units, miscalculation of the lag period between energizing the magnetron and actual microwave radiation production or even different environment conditions. One needs to be cautious when evaluating results without considering factors affecting injury caused by microwave radiation as mentioned above. Otherwise, one may underestimate the potential of this technology. Penetration depth of microwave radiation were frequency dependent. Therefore, redesigning of magnetrons capable of producing variable frequencies as well as redesigned microwave radiation delivery systems could solve the higher energy requirement of microwave applicators for weed management. This is a potential area where future research efforts need to be directed, as an investment of resources with a multidisciplinary approach will be needed to develop this kind of microwave applicator for weed management. Until then, application of microwave radiation for preemergence and postemergence weed management will remain in an experimental stage.

Acknowledgement

The authors want to thank the faculty and staff at Virginia Tech’s Hampton Road Agricultural Research Station (HRAREC), for their assistance with the conducted trials.

Literature Cited

Ascard J (1998) Comparison of flaming and infrared radiation techniques for thermal weed control. Weed Res 38:69–76

Ascard J (1994) Dose-response models for flame weeding in relation to plant size and density. Weed Res 34:377–385

Barker AV, Craker LE (1991) Inhibition of weed-germination by microwaves. Agron J 83:302–305

Bhaskara Reddy MV, Raghavan GVS, Kushalappa AC, Paulitz TC (1998) Effect of microwave treatment on quality of wheat seeds infected with *Fusarium graminearum*. J Agric Eng Res 71:113–117

Casini P, Calamai P, Vecchio V (1993) Flame weeding research in Italy. Communication 4th Intl. Conf. IFOAM, Non-chemical Weed Control (ed. JM Thomas). Association Colleque IFOAM. Dijon. France. p. 119–125.

Daar S (1994) New technology harnesses hot water to kill weeds. The IPM Practitioner 16:1–5

Davis F, Wayland J, Merkle M (1971) Ultrahigh-frequency electromagnetic fields for weed control: phytotoxicity and selectivity. Sci. 173:535–537.

Decareau RV (1985) Microwaves in the Food Processing Industry. Academic Press Inc., Natick, MA. 234 p.

Diprose MF, Benson FA, Willis AJ (1984) The effect of externally applied electrostatic fields, microwave radiation and electric currents on plants and other organisms, with special reference to weed control. Botanical Rev, 50:171–223

Ferriss RS (1984) Effects of microwave oven treatment on microorganisms in soil. Phytopathol 74:121–126

Fujiwara O, Goto Y, Amemiya Y (1983) Characteristics of microwave power absorption in an insect exposed to standing-wave fields. Electronics and Communications in Japan 66:46–54

Hansson D, Ascard J (2002) Influence of developmental stage and time of assessment on hot water weed control. Weed Res 42:307–316

International Electrotechnical Commission (1988) Methods for Measuring the Performance of Microwave Ovens for Household and Similar Purposes. IEC Publication 705-1988, 2nd edn. Geneva.

James C, Swain MV, James SJ, Swain MJ (2002) Development of methodology for assessing the heating performance of domestic microwave ovens. International Journal of Food Sci and Technol 37:879–892

Lozano JC, Laberry R, Bermu´ dez A (1986) Microwave treatment to eradicate seed-borne pathogens in Cassava true seed. L. Phytopathol 117:1–8

Mavrogianopoulos GN, Frangoudakis A, Pandelakis J (2000) Energy efficient soil disinfestations by microwaves. Agric Eng Resources 75:146–153

Mullin J (1995) Microwave processing. In: Gould, G.W. (Ed.), New Methods of Food Preservation. Blackie Academic and Professional, Bishopbriggs, Glasgow. P. 112–134

Nalewaja, Woznica and Manthey (1991) Effect of temperature on percent reduction (%) in dry weight of green foxtail and redroot pigweed provided by postemergence accent applications. Weed Technol 5: 92-96

Nelson SO (1996) A review and assessment of microwave energy for soil treatment to control pests. Trans. ASAE. 39:281–289

Parish S (1989) Investigations into thermal techniques for weed control. 2151–2156 *in* Proc 11th Intl Congr on Agric Eng (eds VA Dodd & PM Grace). Rotterdam Balkema

Parish S (1990) A Review of Non-Chemical Weed Control Techniques. Biol Agric and Horti 7:117–137

Reddy P, Mycock DJ, Berjak P, (1999) The effect of microwave irradiation on the ultrastructure and internal fungi of soybean seed tissues. Seed Sci Technol 28:277–289

Sartorato, I, Zanin G, Baldoin C, De Zanche C (2006) Observations on the potential of microwaves for weed control. Weed Res 46:1–9

Sampson AW, Parker KW (1930) St. Johnswort on range lands of California. Univ Calif Agric Exp Sta Bull 503:25-26

Soriano-Martín ML, Porras-Piedra A, Porras-Soriano A (2006) Use of microwaves in the prevention of Fusarium oxysporum f. sp. melonis infection during the commercial production of melon plantlets. Crop Protection, *25*:52-57.

Stewart CL, Nurse RE, Sikkema PH (2009) Time of day impacts postemergence weed control in corn. Weed Technol 23:346–355

Wayland J, Merkle M, Davis F, Menges RM, Robinson R (1975). Control of weeds with UHF electromagnetic fields. Weed Res 15:1–5

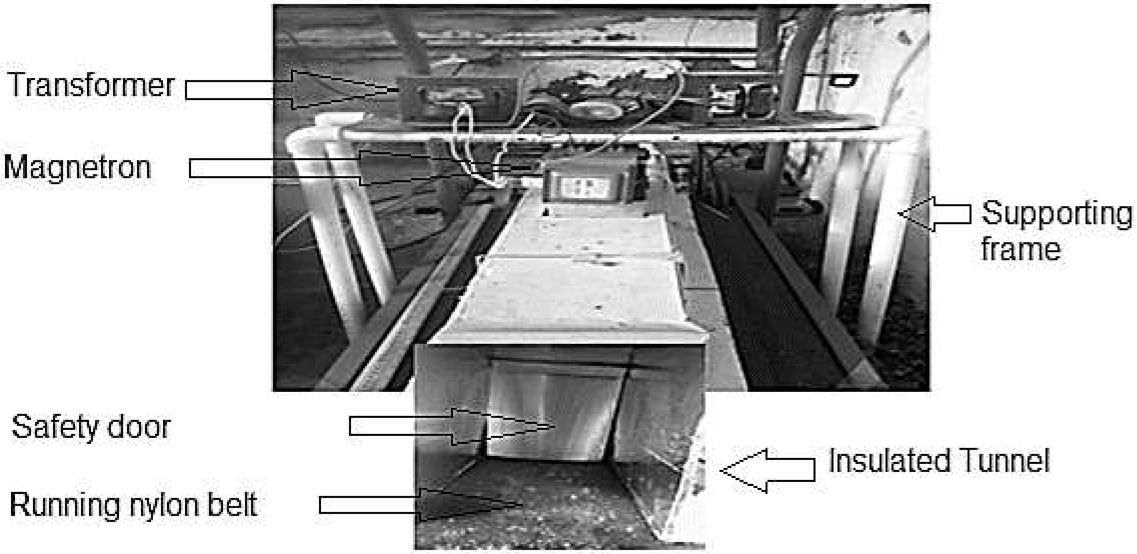

Figure 1a. A photograph of the mobile microwave applicator used for the greenhouse weed control trials.

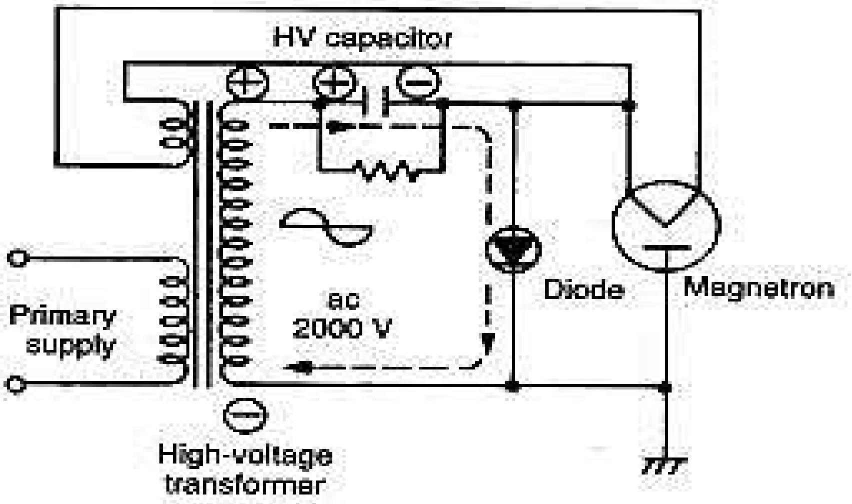

Figure 1b. Electric circuit diagram for microwave applicator used for the greenhouse weed control trials.

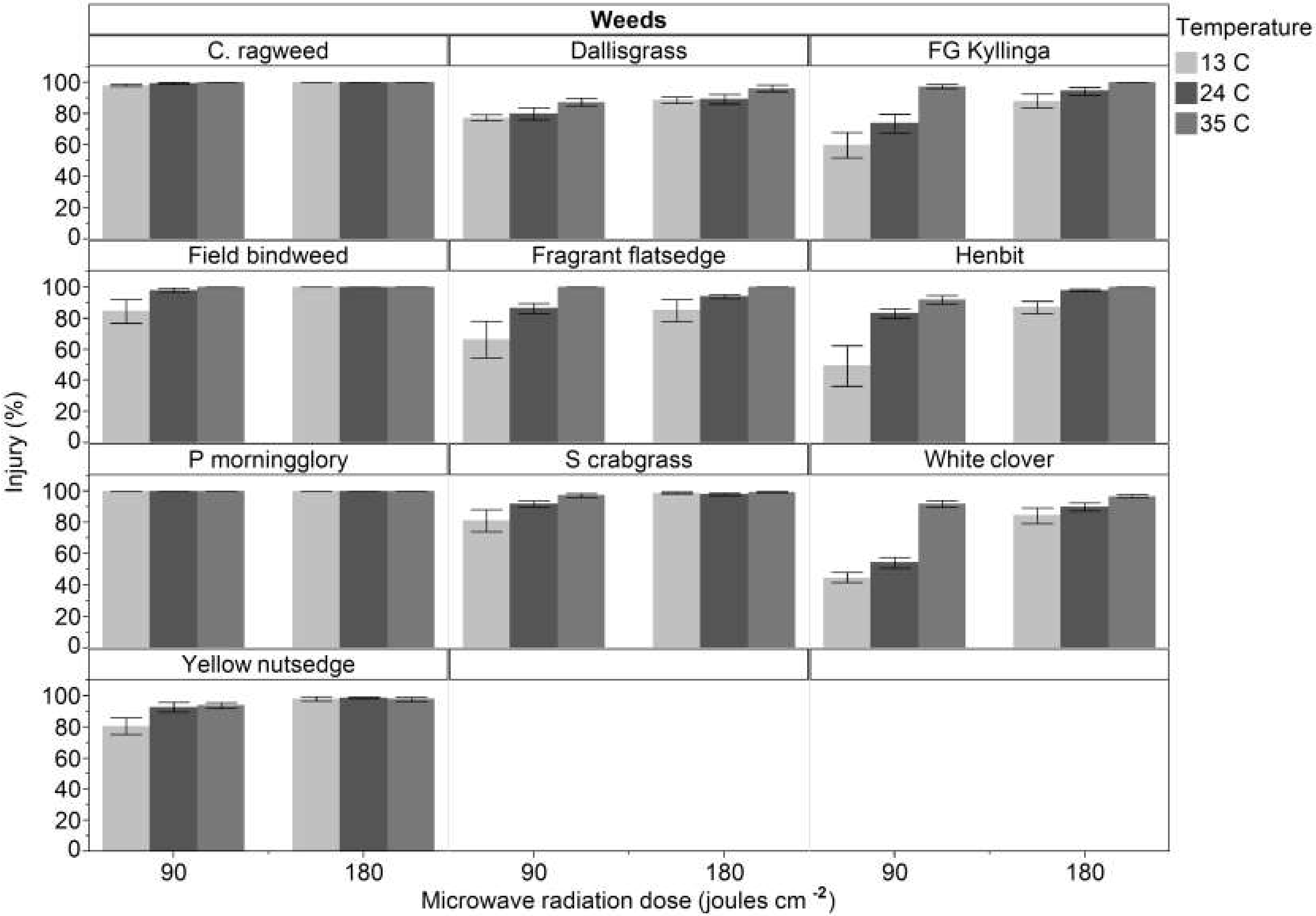
Weeds
C. ragweed
Dallisgrass
FG Kyllinga
Field bindweed
Fragrant flatsedge
Henbit
P morningglory
S crabgrass
White clover
Yellow nutsedge
Temperature
13 C
24 C
35 C
Injury (%)
0
20
40
60
80
100
90
180
Microwave radiation dose (joules cm $^{-2}$)

Figure 2. Effect of ambient air temperature on percent injury determined visually 1 week after application with 90 joules cm^{-2} and 180 joules cm^{-2} of microwave radiation in greenhouse trials. Error bars indicate standard errors.

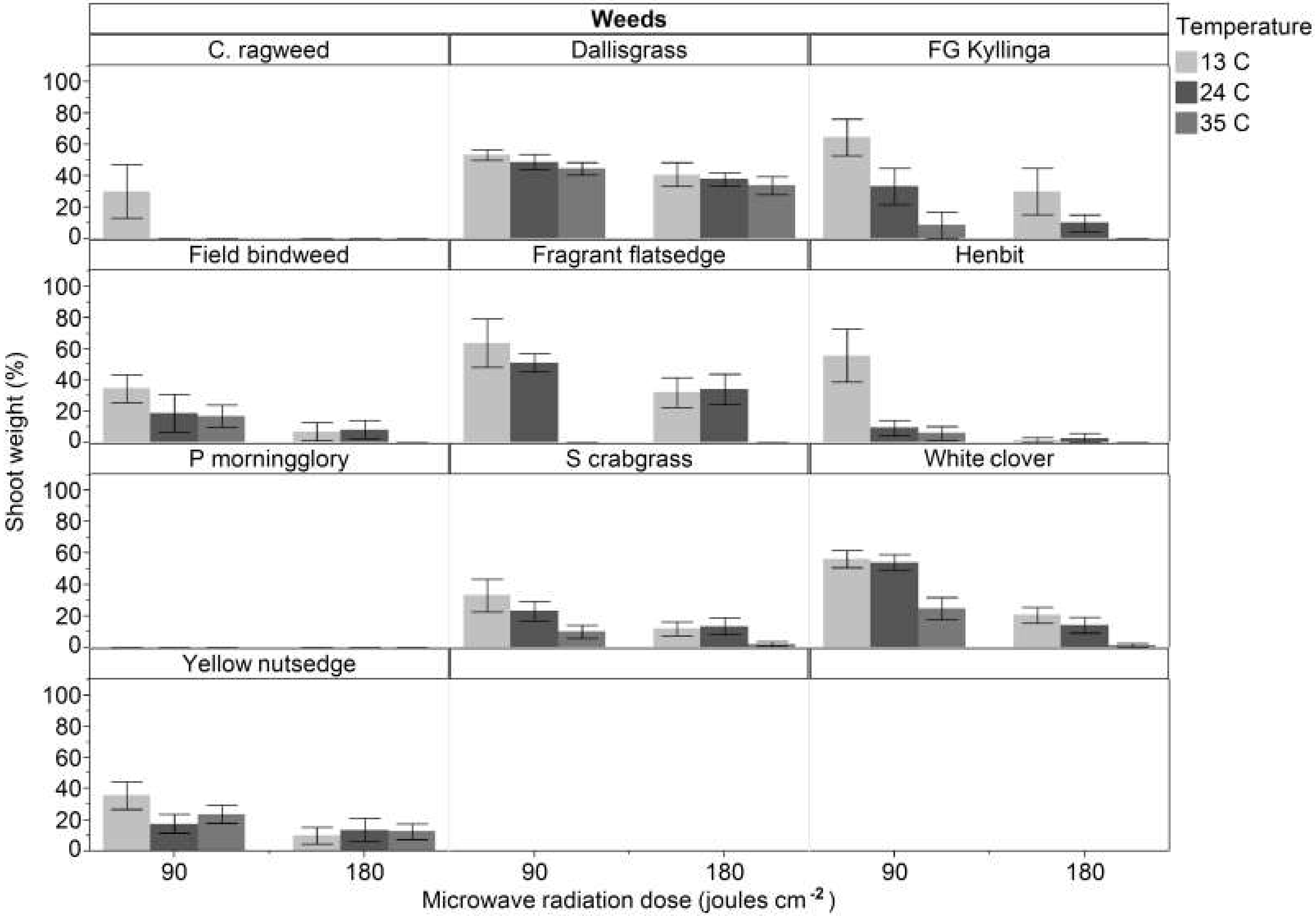
Weeds
Temperature
13 C
24 C
35 C
C. ragweed
Dallisgrass
FG Kyllinga
Field bindweed
Fragrant flatsedge
Henbit
P morningglory
S crabgrass
White clover
Yellow nutsedge
Shoot weight (%)
0
20
40
60
80
100
90
180
Microwave radiation dose (joules cm^{-2})

Figure 3. Effect of ambient air temperature on shoot fresh weight expressed as percent of nontreated plants at 4 WAT with 90 and 180 joules cm^{-2} of microwave radiation in greenhouse trials. Error bars indicate standard errors. Average shoot weight of nontreated plants were common ragweed (8.8 g), dallisgrass (5.2 g), false green kyllinga (2.6 g), field bindweed (5.3 g), fragrant flatsedge (10.2 g), henbit (10.5 g), pitted morningglory (13.3 g), southern crabgrass (11.9 g), white clover (4.8 g), and yellow nutsedge (5.6 g).

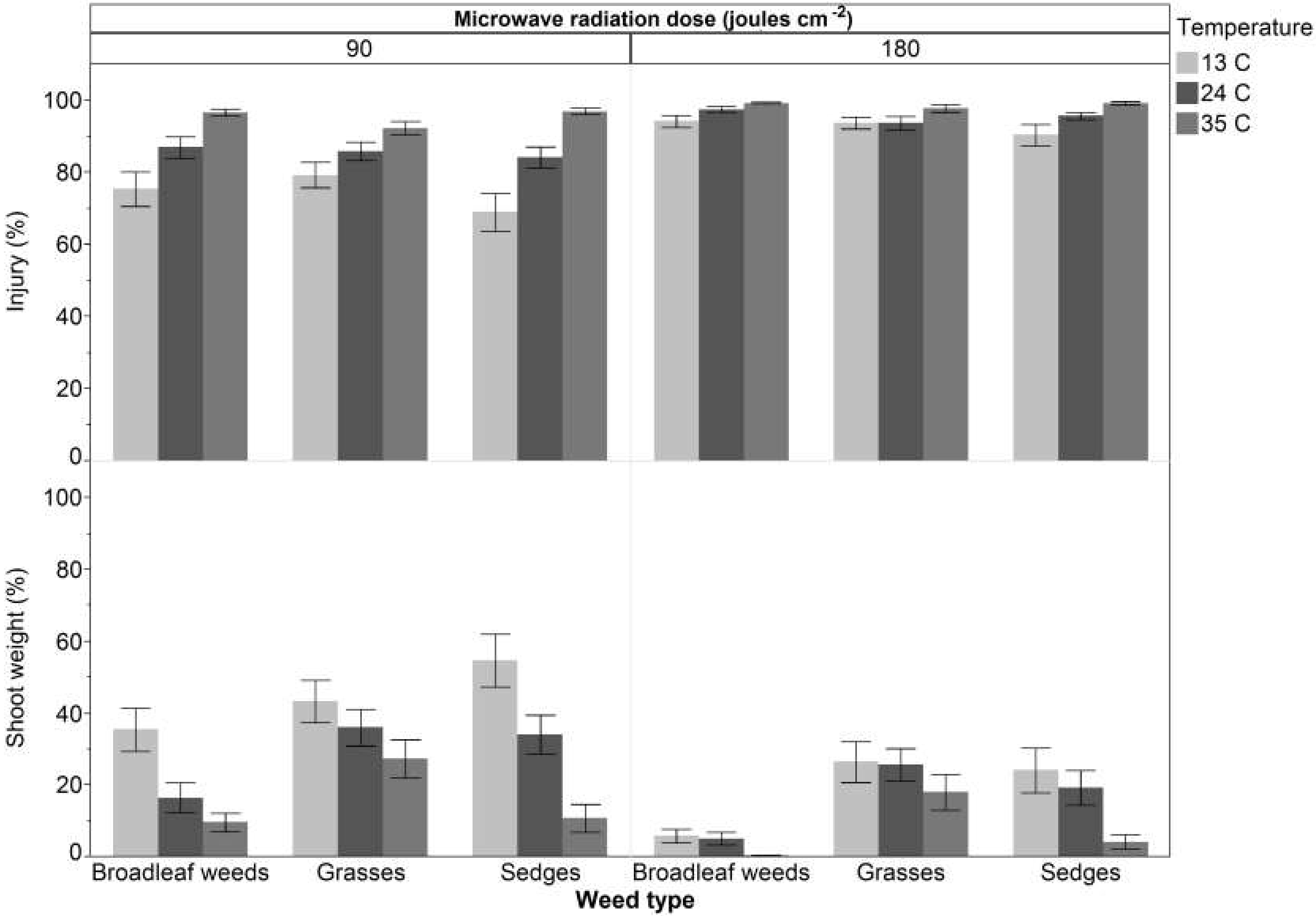
Microwave radiation dose (joules cm $^{-2}$)
90
180
Temperature
13 C
24 C
35 C
Injury (%)
0
20
40
60
80
100
Shoot weight (%)
0
20
40
60
80
100
Broadleaf weeds
Grasses
Sedges
Broadleaf weeds
Grasses
Sedges
Weed type

Figure 4. Effect of ambient air temperature on percent injury on broadleaf, grasses and sedges determined visually 1 week after application and shoot fresh weight expressed as percent of nontreated plants at 4 WAT with 90 and 180 joules cm^{-2} of microwave radiation in greenhouse trials. Error bars indicate standard errors.

Table 1. Percent injury determined visually at 1 WAT and shoot fresh weight expressed as a percent of nontreated plants at 4 WAT with microwave radiation in greenhouse trials, averaged across the two doses of microwave radiation.*

Weed name	**Injury**		**Shoot weight (% of nontreated)**	
Pitted morningglory	100	A	0	E
Common ragweed	100	A	5	DE
Field bindweed	97	A	14	CD
Southern crabgrass	95	AB	16	CD
Yellow nutsedge	94	AB	19	BC
Fragrant flatsedge	89	BC	30	B
Dallisgrass	87	C	43	A
False green kyllinga	86	C	24	BC
Henbit	85	C	13	CDE
White clover	77	D	29	B

* Means separated by Tukey’s HSD (α = 0.05) followed by the same letter in a column are not significantly different.

Chapter 4

Exploring the basis of selectivity using microwave radiation for weed management

Aman Rana and Jeffrey F. Derr*

Abstract

Selective weed control always has been a challenge, especially when the mode of action is thermal. Most plant species cannot tolerate the high amount of energy that is delivered in a short period of time. For example, a flame torch applies heat with a temperature of approximately 2,000 C. One potential alternative is the use of microwave radiation, a particular form of indirect thermal weed control. Microwave-based weed control works via a systematic increase of temperature due to dielectric heating. Greenhouse studies were conducted to explore the possibility of selective weed control using microwave radiation for weed control in bermudagrass using a custom-built 900 watt stationary capable of applying 9 joules cm^{-2} second^{-1} and a mobile microwave applicator capable of applying 18 joules cm^{-2} second^{-1}. In preliminary studies, all three applied doses of microwave radiation (45, 63 and 81 joules cm^{-2}) using a stationary microwave applicator damaged pitted morningglory significantly more than bermudagrass. In another experiment, bermudagrass infested with yellow woodsorrel and common chickweed was irradiated with 54, 90, 126 & 162 joules cm^{-2} of microwave radiation using a mobile microwave applicator. Total microwave irradiation period of a target weed species was controlled by a potentiometer which regulated the speed of the conveyer. At the lowest dose of 54 joules cm^{-2} of microwave radiation, common chickweed and yellow woodsorrel were injured more than bermudagrass. Interspecific differences in in plant responses were minimal at higher doses of microwave radiation.

Nomenclature: 'Yukon' Bermudagrass, *Cynodon dactylon* L. Pers.; pitted morningglory, *Ipomoea lacunosa* L.; yellow woodsorrel, *Oxalis stricta* L.; common chickweed, *Stellaria media* L.

Key words: selectivity, thermal weed control, weed control, microwave prototype.

* Graduate Student and Professor, Hampton Road Agricultural Research & Extension Center (HRAREC), 1444 Diamond Springs Road, Virginia Beach, VA 23455. Corresponding author's E-mail: jderr@vt.edu.

Introduction

For farmers to meet the increasing global food demands in an environmentally and economically sustainable manner, they must have a solution that allow them to continue to improve productivity. Herbicides have been the primary method to control weeds in the last 50 years due to their high efficiency (Nelson 1996). Herbicides have the biggest share (68%) in the pesticide market followed by fungicides (9%) and insecticides (3.2%) [NASS 2006]. Approximately, 113,398 metric tons of herbicide active ingredients (ai) are sold yearly in the United States. Weeds which have growth characteristics similar to the associated crop are often more difficult to selectively control. Chemicals are the most modern and efficient means for controlling unwanted plant species. Selective herbicides date back to the turn of the century, but the greatest advances have occurred in the last six decades. There are many factors that can be exploited for selective weed control, including herbicide placement, differential absorption and translocation, application rate, and application timing, among others. Interest in nonchemical weed control has been increasing with the spread of herbicide-resistant biotypes (Heap 1997) and because of environmental concerns about potential adverse impacts of pesticides (Cox 2004; Sartorato et al. 2006). There are alternatives to the use of herbicides, including fire, steaming, flaming, grazing, mechanical removal and biological control techniques to manage weeds (Gourd 2002; Vitelli and Madigan 2004). Tillage controls weeds but mechanical disturbances to soil often result in germination of new seedlings from the seed bank (Tamado et al. 2002; Vitelli & Madigan 2004). Steam treatment has produced poor results (Gourd 2002) and flaming techniques can be dangerous if the weather is unfavorable or the fuel load is too high, resulting in fires (Vitelli & Madigan 2004). Selective weed control always has been a challenge especially when the mode of action is thermal. The main reason behind this is the huge amount of energy that is delivered in a short period. For example, a flame torch applies heat at approximately 2,000 C.

One potential alternative is the use of microwave radiation, a particular form of indirect thermal weed control. Microwave-radiation based pest control methods work via a systemic increase of temperature due to dielectric heating to eliminate or suppress unwanted pests, such as weeds, weed seed, insects, and soil-borne plant pathogens (Barker and Craker 1991; Davis et al. 1971; Diprose et al. 1984; Fujiwara et al. 1983; Sartorato et al. 2006 Vela´ zquez-Martı´ et al. 2003) and insects (Nelson 1996). Systemic increase of temperature due to dielectric heating depends upon many factors, including the dielectric properties of plant tissues. Wayland et al. (1975) reported the use of microwave radiation for postemergence weed control is less energy consuming than preemergence weed control and could present some favorable characteristics. They also reported grasses were more tolerant of microwave treatments than broadleaf weed species. The effect of a microwave treatment depends not only on the total energy of the microwave flux, but also on plant size and the orientation of the electrical field of the flux in relation to the soil surface and plant morphology. Plant shoots or leaves parallel to the electrical field act like antennas and are more efficiently heated. Ulaby and El-Rayes (1987) studied the dielectric properties of plants at microwave frequencies and reported ones with high moisture content have higher dielectric constants, and therefore are more susceptible to microwave-induced damage. The dielectric properties of most materials are temperature and moisture dependent (Hill & Marchant 1996; Nelson et al. 2001; Vriezinga 1996, 1998, 1999; Vriezinga et al. 2002). A plant's moisture content continuously changes as it matures and its dry mass increases. Several related studies indicate plant developmental stage at the time of treatment is an important factor for weed control (Ascard 1994, 1998; Casini et al. 1993; Daar 1994; Hansson & Ascard 2002; Parish 1989, 1990). Plants with a more upright and rigid structure have more cellulosic material in their cell structure and therefore, have a lower water content than prostrate plants (Salisbury and Ross 1992). Therefore, differences in moisture content may explain the differing susceptibilities of different plant species. The objective of this study was to exploit the potential use of microwave radiation for selective weed control in bermudagrass turf.

Materials and Methods

Preliminary trial. These experiments were conducted at Virginia Tech's Hampton Road Agricultural Research and Extension Center (HRAREC), Virginia Beach, VA. Preliminary studies were conducted using a stationary microwave applicator. The unit was built using one magnetron of 900 watt output (Fig. 1). The magnetron was installed in a 29 cm-long and 10 cm wide square metallic pipe, which served as a waveguide. The top side of the pipe was closed using a metal lid and the bottom was used to insert pots for microwave treatment. A 10 cm wide square piece of clear polycarbonate sheet was fitted in the pipe to avoid steam deposition. Deposited steam on the interior of the waveguide wall can absorb microwave radiation and hinder its delivery to the target weed species. This would adversely affect overall efficiency of the microwave applicator. A simple power supply, including a magnetic-shunt transformer, a high voltage capacitor and rectifier, was connected to the magnetron. Such a power supply allows the operation from a standard 110 volt alternating current; 60 Hz supply (Fig. 2). There was a lag period between energizing the magnetron and actual microwave radiation production. This lag period was variable, depending on the cathode temperature of the magnetron. Thus only an estimate of energy required can be calculated for the in stationary mode system used for microwave application.

To explore the possibility of selective weed control using microwave radiation, a preliminary study was conducted using two plants, pitted morningglory and bermudagrass variety 'Yukon'. 'Yukon' bermudagrass is a seed-propagated turf-type cultivar released by the Oklahoma Agricultural Experiment Station in 1997 (Wu et al. 2009). Pitted morningglory was chosen due to its high sensitivity to microwave radiation based in preliminary trials conducted by the author. Pitted morningglory was grown in 10 cm-wide pots from seed in a peat-based professional growing medium (ProMix, Premier Tech Horticulture, 1 Avenue Premier Rivière-du-Loup, Québec, Canada G5R 6C1) designed for a wide range of greenhouse applications. Bermudagrass is a warm-season perennial grass that spreads by rhizomes and stolons. Bermudagrass has excellent heat, drought, and salt tolerance. Established 'Yukon' bermudagrass was transplanted from a field at HRAREC field into 10 cm wide pots containing a Tetotum loam soil (fine-loamy, mixed, thermic Type Hapludults). Average height of Yukon bermudagrass was 6.4 cm at the time of treatment. Pitted morningglory at the cotyledon stage was plugged into the center of each bermudagrass pot (Fig. 3). The microwave applicator was capable of delivering 9 joules cm^{-2} second^{-1}. Three treatments of microwave radiation were used in this study along with a nontreated check. Three microwave irradiation for 8, 10 and 12 seconds, were used in this study. There was a three second lag (warmup period) between electricity supplied to the magnetron and actual microwave radiation produced. This lag period was calculated by measuring the time lapse between energizing the magnetron and the microwave radiation production detected by a microwave radiation detector (Model No. DT-2G, Shenzhen Everbest Machinery Industry Co., Ltd. 19th Building, 5th Region, Baiwangxin Industry Park, Baimang, Xili, Nanshan, Shenzhen, China P.C. 518108). The applied microwave dose were calculated by the following equation.

Applied microwave dose = [Total irradiation period(s) – lag period (3s)] x microwave radiation delivery rate (joules cm^{-2} $second^{-1}$)

Three microwave doses (45, 63 and 81 joules cm^{-2}) were applied to 'Yukon' bermudagrass and pitted morningglory pots and these plots were compared to nontreated ones.

Selective control of turf weeds. To eliminate the gap between electric power supplied to magnetrons and actual microwave radiation produced, a conveyer was built and used for study. A non-motorized treadmill, (Model No.WLTL23180, Weslo, 1500 South 1000 West Logan, UT 84321) was used as a base. An 115V, geared motor with torque 44 N.mm, (Model No. 2Z797D, Dayton, 5959 W Howard St. Niles, IL 60714), was used to drive the treadmill belt system at a desired speed. A potentiometer, (Model No. 1LS1I1, Levitop, 20497 SW Teton Avenue Tualatin, OR 97062), was used to control the rotations per minute (RPM) of the geared motor. Two magnetrons (Model No. 2M246, LG, 10225 Willow Creek Road, San Diego CA 92131) of output power of 900 watt each were fitted in the middle of the tunnel using suspension wire with the help of support frame made up of PVC pipes. These two magnetrons were properly wired with corresponding capacitors (Model No. CH2100954C8N, LG, 10225 Willow Creek Road, San Diego CA 92131), diodes and a high voltage transformer (Model No. CBJ72, Samsung, 85

Challenger Road, Ridgefield Park, NJ 07660) as per specifications provided by the manufacturer. These parts were also extracted from a microwave oven. Since September 1990, microwave oven manufacturers have adopted a single standard for measuring the power output for microwave ovens. Magnetrons were tested using the International Electrotechnical Commission (IEC) IEC-705 standard (James at al. 2002). This standard uses a1 L water load and the test is made using a cold oven in defined ambient conditions. In this methodology, cold (10 ± 2 C) potable water is heated in a glass container of certain parameters and the time to a 10 ± 2 C elevation of water temperature is measured. The microwave power absorbed in the water during the heating and used for its temperature elevation was calculated using following equation.

$$\Delta T = (P \times t)/(V \times cp \times \rho)$$

where: ΔT – the increase of the mean temperature of the heated water (K),

P - microwave power used for heating (W),

V - volume (m^3),

cp - heat capacity (joules kg^{-1} K^{-1}),

ρ - density (kg m^{-3}),

t - time of heating (s)

The power supply used allowed the operation from a standard 110 volt, 60 Hz supply. One three-phase 220 volt, 60 Hz power supply was used for the conveyer with two magnetrons. The three-phase power supply was actually an advantage, allowing one to turn on the individual magnetrons sequentially. The power supplies of adjacent magnetrons were connected to different phases of the three-phase supply so that the electric load was distributed evenly. In this way, the operation of the magnetrons was unsynchronized. The amperage load of each magnetron was monitored on a regular basis after each treatment to make sure the unit was running properly. The circuit diagram of the magnetron power supply and corresponding operation monitor is shown in Figure 2. There were a total of two power supplies and two monitor circuits with two indicator light bulbs, one for each of the two magnetrons. A microwave-radiation leakage detector (Model No. DT-2G, Shenzhen Everbest Machinery Industry Co., Ltd. 19th Building, 5th Region, Baiwangxin Industry Park, Baimang, Xili, Nanshan, Shenzhen, China P.C. 518108), with sensitivity range 0 to 9.99 mW cm^{-2} and a warning value set at 5.0 mW cm^{-2} was used to find any microwave leakage during operations as well as to determine safe distances for human operators.

Magnetrons were approximately 65% efficient in converting electric energy into microwave energy. The rest of the energy was converted into heat that may damage the magnetrons. Two fans attached to a tripod were used to cool the magnetrons during weed treatment operations. Four aluminum doors, two at inlet and two at exit, were installed in such a way that only one door open at a time as potted plants were passed into chamber. This design increased safety level for operator. Total microwave irradiation period of a weed was controlled by regulating the speed of the geared motor. A rectangular tunnel 120 cm long, 15 cm wide and 25 cm tall was made of cardboard. This cardboard tunnel was insulated inside with aluminum tape to avoid leakage of microwave radiation during operation (Fig. 4). Total microwave irradiation period in stationary mode was controlled by switching on/off the magnetron power supply.

‘Yukon’ bermudagrass was grown from seed for one month in pots with dimension 16.5 cm in length, 12.5 cm in width and 5 cm deep containing a peat-based professional growing medium (ProMix, 1 Avenue Premier Rivière-du-Loup, Québec, Canada G5R 6C1). Yellow woodsorrel and common chickweed were grown from seed for 4 to 6 weeks prior to transplanting into the pots containing bermudagrass. Common chickweed was 10 to 15 cm tall and yellow woodsorrel was 5 to 8 cm tall at treatment. Each bermudagrass pot contained one seedling of both weed species. Pots were fertilized with Osmocote (14-14-14, Scotts, 14111 Scottslawn Road, Marysville, OH 43040) at 5 g per container and irrigated daily. Pots were treated with microwave radiation using the conveyer system at 0, 54, 90, 126, and 162 joules cm^{-2} energy of microwave radiation.

Statistical methods. A randomized complete block design with four treatments and three replications was used and each study was repeated to confirm outcome of the research. Plant injury was determined visually each week for four weeks after treatment on a scale of 0 to 100. Shoot fresh weight was recorded at 4 weeks after treatment (WAT). Collected data were subjected to statistical analysis for mean comparison using statistical software (JMP 10, 100 SAS Campus Drive Building T Cary, NC 27513). Tukey's HSD at the 0.05 level was used for mean separation.

Results and Discussion

Preliminary study. There were no significant differences between experiments so the two trials for each study were combined into one analysis. Using the stationary microwave applicator, 45 and 63 joules cm^{-2} of microwave radiation injured pitted morningglory 92%. Microwave radiation at the rate of 63 and 81 joules cm^{-2} totally controlled pitted morninglgory at 4 WAT (Fig. 5). Since the growing point of pitted morningglory was at the top of the plant, it was directly exposed to the applied microwave radiation (Fig. 4). Therefore, no regrowth was seen as both doses of microwave radiation (63 and 81 joules cm^{-2}) killed pitted morningglory. The lowest dose of microwave radiation (45 joules cm^{-2}) injured Yukon bermudagrass 10%, and 63 joules cm^{-2} of microwave irradiation injured bermudagrass 22% at 1 WAT. Yukon bermudagrass injured by 45 and 63 joules cm^{-2} of microwave radiation completely recovered within 4 WAT. The highest dose of microwave radiation (81 joules cm^{-2}) injured Yukon bermudagrass 27% at 1 WAT, which decreased to 5% injury at 4 WAT. One possible reason for this differential response of pitted morningglory and Yukon bermudagrass to microwave radiation might be because pitted morningglory cotyledons and leaves were above the Yukon bermudagrass, increasing interception of the microwave energy. Narrow leaf blades, along with the presence of rhizomes, and stolons, gave Yukon bermudagrass a relative advantage against microwave treatments. Another possible reason might be the uneven flux of microwave radiation with the stationary microwave system. This question was addressed in the next experiment where a mobile microwave applicator was used to overcome uneven distribution of microwave energy.

Selective control of turf weeds. Using the mobile microwave applicator, injury to bermudagrass was comparatively higher in comparison to the stationary microwave unit. This might be due to a more uniform distribution of microwave energy across the bermudagrass canopy. Since the Yukon bermudagrass was grown from seed in this experiment, plants were less established than in the preliminary trial. Yellow woodsorrel and common chickweed stems became prostrate as their stems and other plant tissues warmed and softened due to microwave irradiation. There was a significant interaction between microwave dose and plant species. The lowest dose of microwave radiation (54 joules cm^{-2}) injured common chickweed the highest (72%), followed by yellow woodsorrel (53% injury) and bermudagrass (16% injury) at 1 WAT (Fig. 6). Bermudagrass recovered completely from injury caused by 54 joules cm^{-2} of microwave radiation by 4 WAT. Injury observed in yellow woodsorrel by 54 joules cm^{-2} of microwave radiation decreased from 53% to 33% by 4 WAT. This might be due to the anatomical structure of yellow woodsorrel, as some growing points can be near the soil surface and thus less exposed to microwave radiation. Injury to common chickweed by 54 joules cm^{-2} of microwave radiation decreased from 72% to 64% by 4 WAT. This slow recovery might be due to the different anatomical structure of common chickweed in comparison to yellow woodsorrel. The growing point of common chickweed is at the shoot tips. Microwave radiation at the rate of 90 joules cm^{-2} or more completely controlled common chickweed. Microwave radiation at the rate of 90 joules cm^{-2} injured yellow woodsorrel 73% at 1 WAT but decreased to 58% by 4 WAT. Microwave radiation at the rate of 90 joules cm^{-2} injured bermudagrass 58% at 1 WAT, which decreased to 39% injury by 4 WAT. Microwave radiation at the rate of 126 joules cm^{-2} injured yellow woodsorrel 90% with little recovery by 4 WAT. Microwave radiation at the rate of 126 joules cm^{-2}injured bermudagrass 88% at 1 WAT, which decreased to 69% injury by 4 WAT. Microwave radiation at 162 joules cm^{-2} completely controlled yellow woodsorrel by 4 WAT as no regrowth was noticed. Microwave radiation at the rate of 162 joules cm^{-2} injured bermudagrass 91%. Observed injury in bermudagrass caused by microwave radiation decreased slightly from 91% at 1 WAT to 86% at 4 WAT.

The two highest level of microwave radiation energy (126 and 162 joules cm^{-2}) severely damaged all three species (Fig. 6). No significant differences were seen between plant species at these two higher rates of microwave radiation. The higher microwave energy levels were apparently sufficient to raise plant tissue temperature regardless of plant anatomy. Bermudagrass, however, was injured less than common chickweed (58% versus 100%, respectively) when microwave energy was applied at 90 joules cm^{-2}. Differences in injury between bermudagrass (58%) and yellow woodsorrel (70%) were statistically non-significant at that dose. Overall, common chickweed was injured the most, followed by yellow woodsorrel, with the least injury seen in bermudagrass at 1 WAT (Table 1).

These results demonstrate a differential response of plant species at lower doses of microwave radiation. Leon and Ferreira (2008) reported a negative correlation between leaf thickness and thermal injury caused by steam. They also reported broadleaf species with wider leaves were injured more than species with narrower leaves. Davis et al. (1971) reported similar result, as snap bean plants (*Phaseolus vulgaris* L.) were several times more susceptible to microwave treatment than honey mesquite (*Prosopis glandulosa* Torr.). Wayland et al. (1975) and Ascard (1995) showed grasses were more tolerant to thermal treatment than broadleaf species in dose response studies of different weed species. The effect of a microwave treatment depends not only on the total energy of the microwave flux, but also on plant size and the orientation of the electrical field of the flux in relation to the soil surface and plant morphology. Plant shoots or leaves parallel to the electrical field vector act like antennas and are more efficiently heated. Selective weed control potentially could be achieved between different plant species by applying a lower dose of microwave radiation. Unfortunately, existing magnetrons do not provide control over the intensity of microwave radiation. The power level is adjusted by controlling the on and off time periods of magnetrons. A redesign of magnetrons for agriculture purposes would be beneficial although challenging. Bermudagrass is a perennial grass with rhizomes and stolons to support regrowth. If lower doses of microwave radiation can be applied postemergence for weed control, these lower doses are not sufficient to raise soil temperature enough to injure underground plant parts. Microwave-irradiated plants that have rhizomes or stolons or have their growing point at or below the soil surface are more likely to recover from any foliar damage, providing the basis for selectivity. This area of research needs to be investigated further using an improved design of a microwave applicator.

Acknowledgement

The authors want to thanks all faculty and staff of Virginia Tech's Hampton Road Agricultural Research Station (HRAREC) for providing necessary resources and help to complete this study.

Literature Cited

Ascard J (1998) Comparison of flaming and infrared radiation techniques for thermal weed control. Weed Res 38:69–76

Ascard J (1995) Effects of flame weeding on weed species at different developmental stages. Weed Res 35:397-411

Ascard J (1994) Dose response models for flame weeding in relation to plant size and density. Weed Res 34:377–385

Barker AV, Craker LE (1991) Inhibition of weed-germination by microwaves. Agron J 83:302–305

Casini P, Calamai P, Vecchio V (1993) Flame weeding research in Italy. *In* Communication 4th International Conference IFOAM, Non-chemical Weed Control, Association Colleque IFOAM, Dijon, France. p. 119–125

Cox C (2004) Glyphosate. J. Pesticide Reform. 24:10–15

Daar S (1994) New technology harnesses hot water to kill weeds. The IPM Practitioner 16:1–5

Davis FJ, Wayland M, Merkle M (1971) Ultrahigh frequency electromagnetic fields for weed control: phytotoxicity and selectivity. Sci 173:535–537

Diprose MF, Benson FA, Willis AJ (1984) The effect of externally applied electrostatic fields, microwave radiation and electric currents on plants and other organisms, with special reference to weed control. Botanical Rev 50:171–223

Fujiwara O, Goto Y, Amemiya Y (1983) Characteristics of microwave power absorption in an insect exposed to standing-wave fields. Electronics and Communications in Japan 66:46–54

Gourd T (2002) Controlling weeds using propane generated flame and steam treatments in crop and non-croplands. Final Report. Organic Farming Research Foundation. Santa Cruz. California. USA. http://ofrf.org/funded/reports/gourd_02s06.pdf. Accessed January 19, 2014

Hansson D, Ascard J (2002) Influence of developmental stage and time of assessment on hot water weed control. Weed Res 42:307–316

Heap IM (1997) The occurrence of herbicide-resistant weeds worldwide. Pesticide Sci 51:235–243

Hill JM, Marchant TR (1996) Modelling microwave heating. Appl Math Modelling. 20:3–15

Leon RG Ferreira DT (2008) Interspecific differences in weed susceptibility to steam injury. Weed Technol. 22:719–723

NASS (2006) National Agricultural use database. http://www.pestmanagement.info/nass/act_dsp_usage_multiple.cfm. Accessed January 17, 2013

Nelson SO (1996) A review and assessment of microwave energy for soil treatment to control pest. Trans. Amer Soc Agric Eng 39:281–289

Nelson MI, Wake GC, Chen XD, Balakrishnan E (2001) The multiplicity of steady state solutions arising from microwave heating. I. Infinite biot number and small penetration depth. The Australia and New Zealand Industrial and Appl Math J. 43:87–103

Parish S (1990) A Review of Non-Chemical Weed Control Techniques. Biological Agric and Horti 7:117–137

Parish S (1989) Investigations into thermal techniques for weed control. P. 2151–2156 *in* Proceedings of the 11th International Congress on Agricultural Engineering

Salisbury FB, Ross CW (1992) Plant Physiology (4th edition). Wadsworth Publishing Co., California, USA. Sartorato I, Zanin G, Baldoin C, De Zanche C (2006) Observations on the potential of microwaves for weed control. Weed Res 46:1–9

Tamado T, Schutz W, Milberg P (2002) Germination ecology of the weed Parthenium hysterophorus in eastern Ethiopia. Annals of Appl Biolo 140: 263–270

Ulaby FT, El-Rayes MA (1987) Microwave dielectric spectrum of vegetation part II: dual-dispersion model. IEEE Trans Geosci and Remote Sensing. 25:550–557

Vela´ zquez-Martı´ B, Osca JM, Jorda´ C, Marza A (2003) Estudio de la viabilidad de la eliminacio´n de semillas de malas hierbas en el suelo por radiacio´n de microondas. Boletı´n de Sanidad Vegetal 129:49–55

Vitelli JS, Madigan BA (2004) Evaluation of a hand-held burner for the control of woody weeds by flaming. Australian J Exp Agric 44:75–81

Vriezinga CA, S´anchez-Pedreno S, Grasman J (2002) Thermal runaway in microwave heating: a mathematical analysis. Appl Math Modelling. 26:1029–1038

Vriezinga CA (1999) Thermal profiles and thermal runaway in microwave heated slabs. J Appl Phys 85:3774–3779

Vriezinga CA (1998) Thermal runaway in microwave heated isothermal slabs, cylinders, and spheres. J Appl Phys 83:438–442

Vriezinga CA (1996) Thermal runaway and bistability in microwave heated isothermal slabs. J Appl Phys 79:1779–1783

Wayland J, Merkle M, Davis F, Menges RM, Robinson R (1975) Control of weeds with UHF electromagnetic fields. Weed Res 15:1–5

Wu Y, Martin DL, Anderson JA, Bell GE, Anderson MP, Walker NR, Moss JQ (2009) Recent Progress in Turf Bermudagrass Breeding Research at Oklahoma State University. United States Golf Association (USGA) Turfgrass and Environmental Research 8:1-11. http://usgatero.msu.edu/v08/n16.pdf. Accessed January 17, 2015

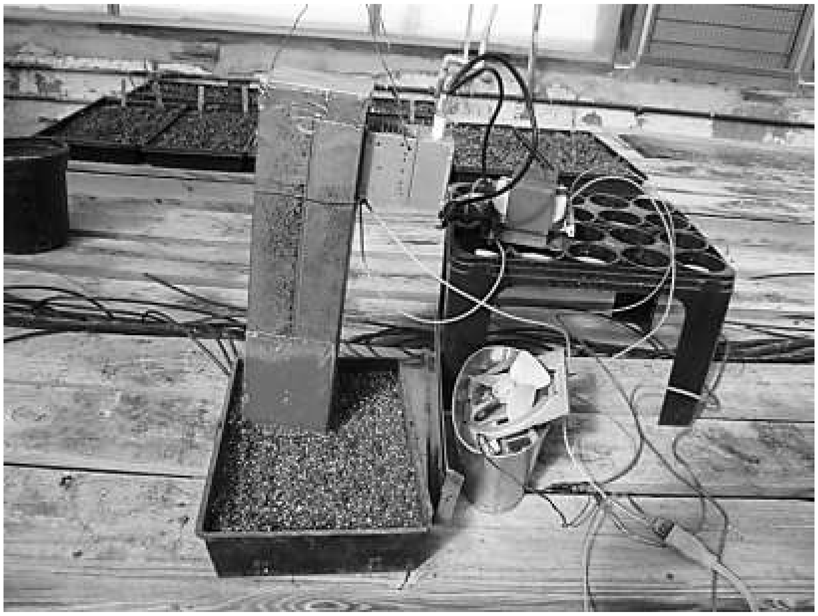

Figure 1. Stationary microwave applicator used for preliminary weed control trials in greenhouse experiments.

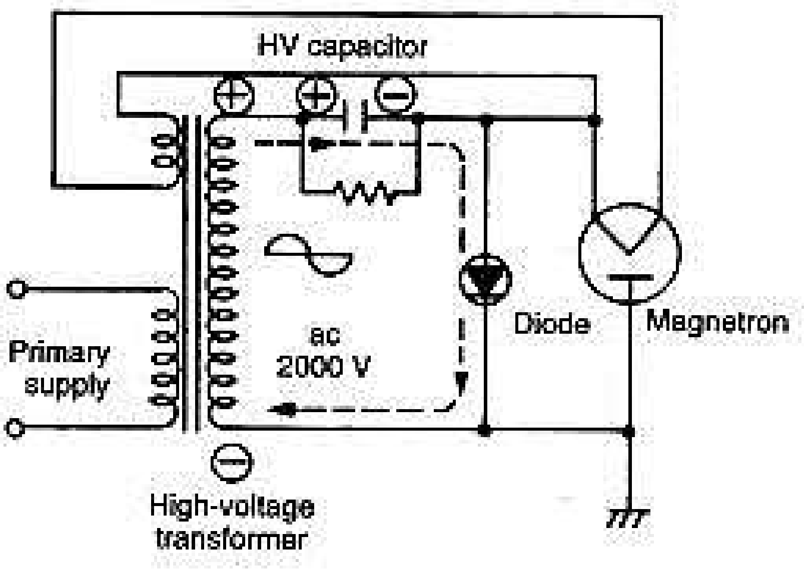

Figure 2. Electric circuit diagram for power supply to magnetron used for weed control trials.

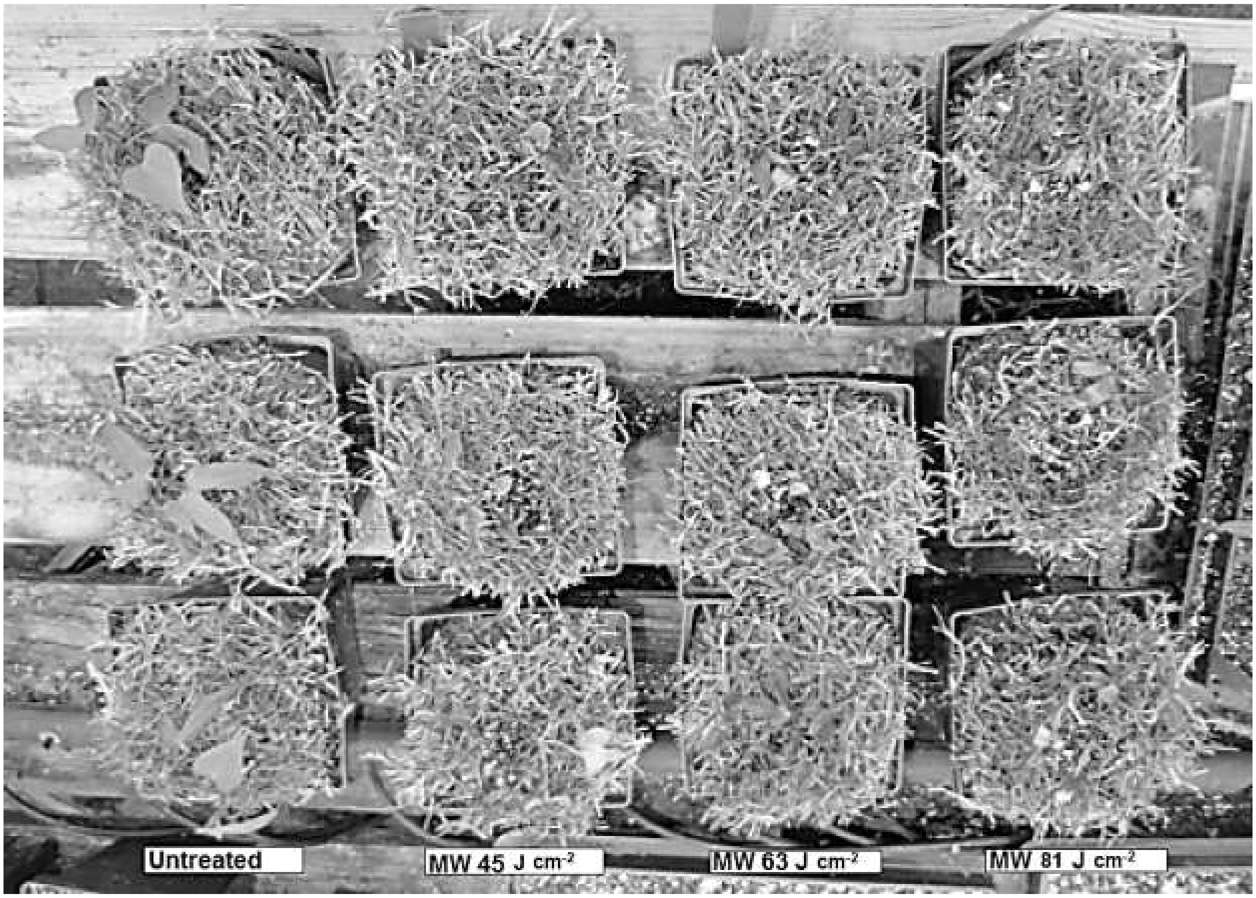

Figure 3. Injuries caused to pitted morningglory and bermudagrass by 45, 63 and 81 joules cm^{-2} of microwave treatments in a preliminary greenhouse trial.

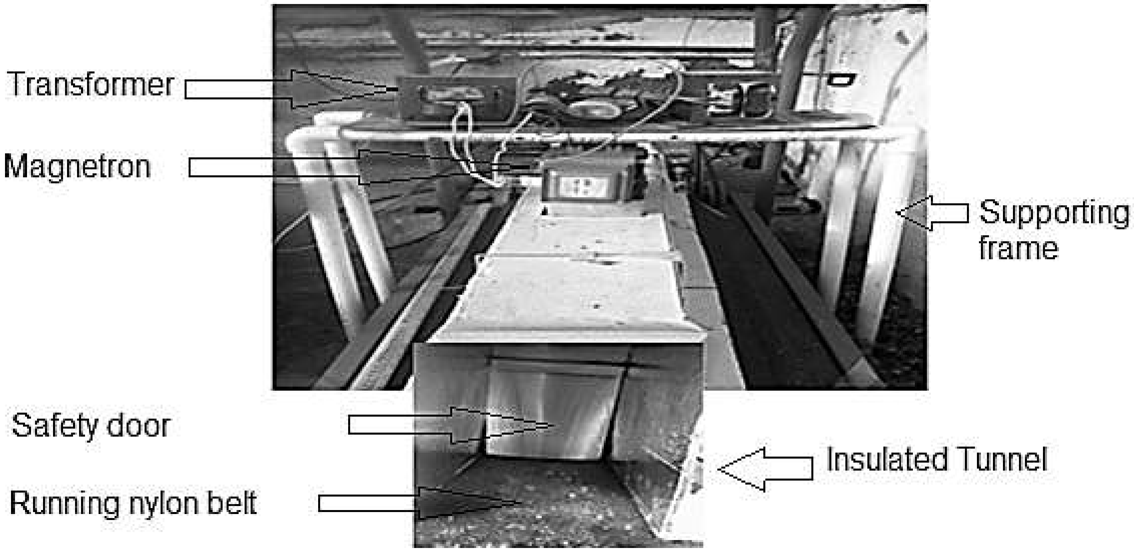

Figure 4. A photograph of the custom built conveyer used for the second weed control trial in the greenhouse.

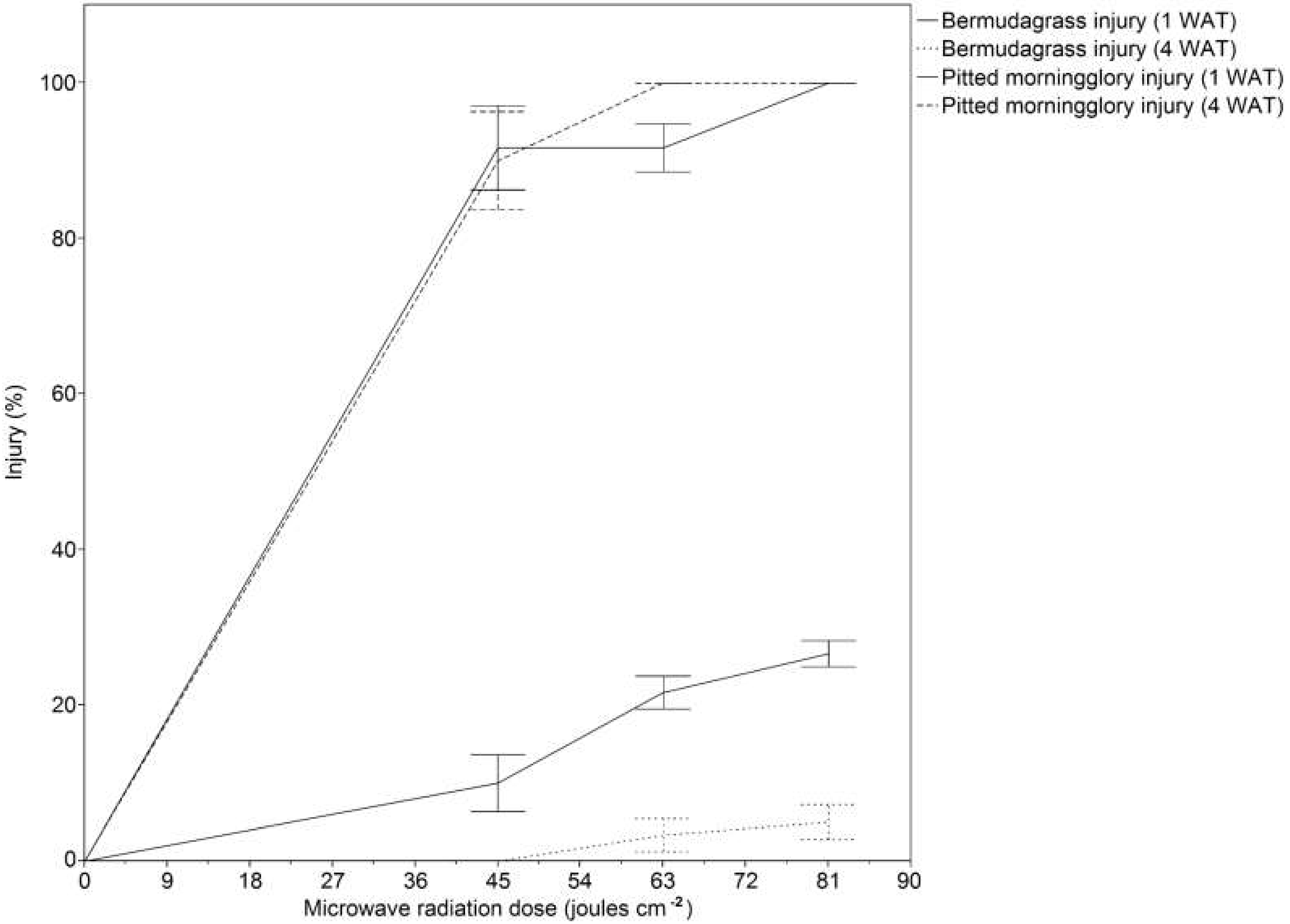
Bermudagrass injury (1 WAT)
Bermudagrass injury (4 WAT)
Pitted morningglory injury (1 WAT)
Pitted morningglory injury (4 WAT)
Injury (%)
0
20
40
60
80
100
0
9
18
27
36
45
54
63
72
81
90
Microwave radiation dose (joules cm -2)

Figure 5. Thermal injury in pitted morningglory and bermudagrass by 45, 63 and 81 joules cm^{-2} of microwave radiation using a stationary microwave applicator at 1 and 4 WAT in greenhouse studies. Error bars indicate standard errors.

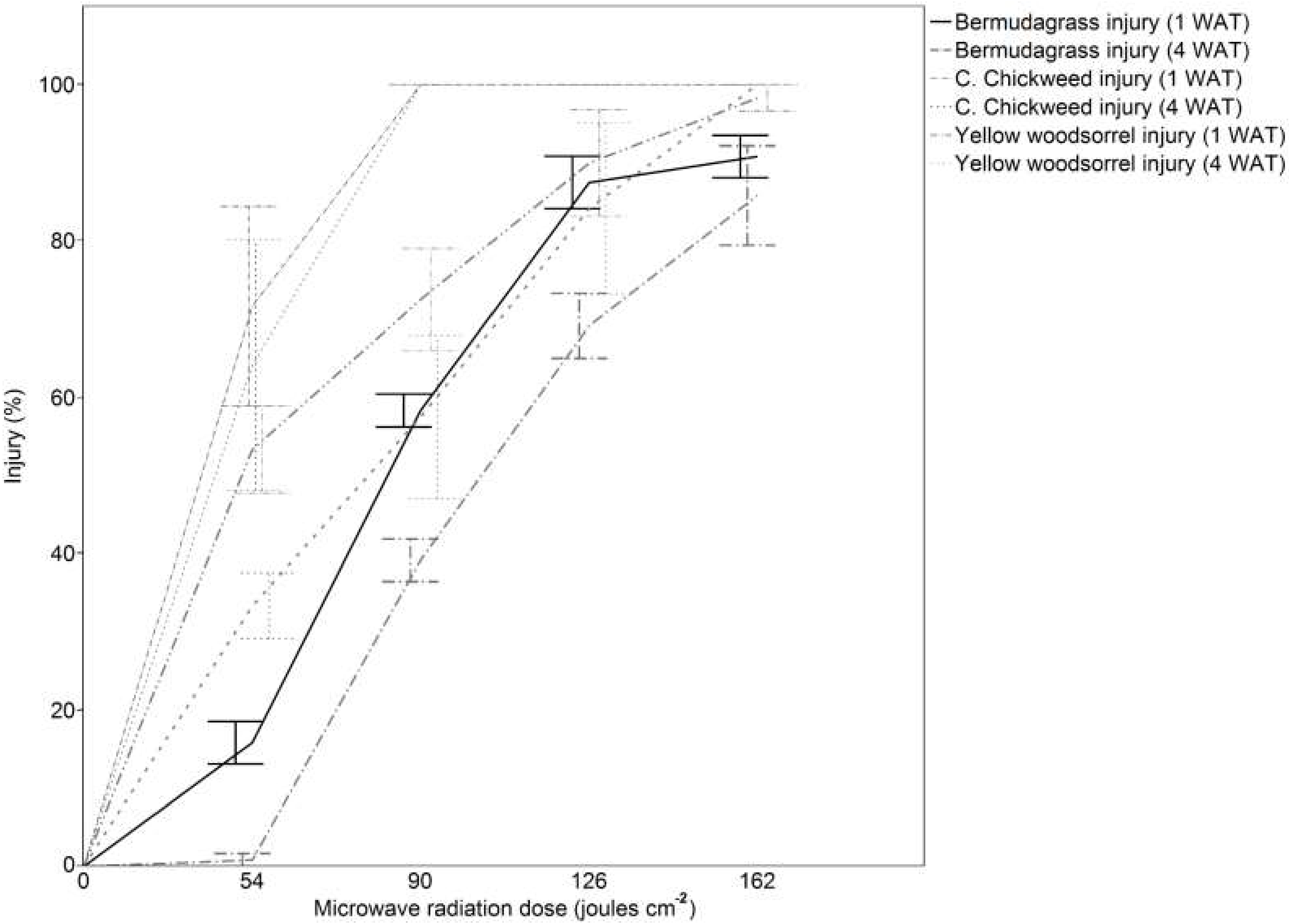
Injury (%)
0
20
40
60
80
100
0
54
90
126
162
Microwave radiation dose (joules cm^{-2})
Bermudagrass injury (1 WAT)
Bermudagrass injury (4 WAT)
C. Chickweed injury (1 WAT)
C. Chickweed injury (4 WAT)
Yellow woodsorrel injury (1 WAT)
Yellow woodsorrel injury (4 WAT)

Figure 6. Injury caused by four different doses of microwave radiation to bermudagrass, yellow woodsorrel and common chickweed at 1 and 4 WAT in greenhouse trials. Error bars indicate standard errors.

Table 1. Comparison of injury between bermudagrass, common chickweed, and yellow woodsorrel, averaged across microwave dose at 1 WAT in greenhouse trials.

Plant species	**LS Means**
Common chickweed	74
Yellow woodsorrel	63
Bermudagrass	51
HSD ($\alpha = 0.05$)	2.39

Chapter 5

Development of a Prototype Microwave applicator and its Use for Weed Management in the Field

Aman Rana and Jeffrey F. Derr*

Abstract

Microwave radiation control existing weeds by generating heat inside plant tissues, which is called dielectric heating. A prototype was built to apply microwave radiation for postemergence weed control in the field. Two different designs of a microwave applicator were built and tested. The first one, containing twelve magnetrons, had too much electromagnetic interference, resulting in damage to the unit. The second prototype contained four magnetrons, each capable of producing an output power of 900 watt. All four magnetrons were air cooled using a closed duct system. Power was supplied with two portable electric generators available at the Hampton Road Agricultural and Research and Extension Center. An experiment compared the effectiveness of microwave radiation to contact herbicides, including acetic acid at 49 kg ai ha^{-1} and diquat at 0.6 kg ai ha^{-1}. Microwave radiation at 135 joules cm^{-2} effectively controlled emerged weeds without any residual effect. Microwave radiation applied at the rate of 72 joules cm^{-2} controlled weeds more effectively than acetic acid. Microwave radiation applied at the rate of 135 joules cm^{-2} controlled weeds comparable to diquat, with both treatments providing 90% control. Weed control was unacceptable with 45 joules cm^{-2} of microwave treatment. Common chickweed had the highest injury (89%), followed by henbit (76%), and buckhorn plantain (71%), with the lowest injury in common bermudagrass (48%) when irradiated with 45 joules cm^{-2} of microwaves.

Nomenclature: bermudagrass, *Cynodon dactylon* (L.) Pers.; buckhorn plantain, *Plantago lanceolata* L.; common chickweed, *Stellaria media* L.; henbit, *Lamium amplexicaule* L.

Key words: postemergence weed control, thermal weed control, nonchemical weed control, nonselective herbicides.

* Graduate Student and Professor, Hampton Road Agricultural Research & Extension Center (HRAREC), 1444 Diamond Springs Road, Virginia Beach, VA 23455. Corresponding author's E-mail: jderr@vt.edu.

Introduction

Weeds must be controlled because they can cause direct or indirect reductions in crop growth or quality. Weed control continues to be a challenge for both conventional and organic crop producers. Weeds can be controlled by using various physical, cultural, chemical or biological methods. The increase in herbicide-resistant weeds has created a need for alternative weed control strategies, including the use of nonchemical options. For farmers to meet the increasing global food demands in an environmentally and economically sustainable manner, they must have a solution for pest management that allow them to continue to improve productivity. Chemical control has been the primary method to control weeds in the last 50 years due to its high efficiency (Nelson 1996). Herbicides have the biggest share (68%) in the pesticide market followed by fungicides (9%) and insecticides (3.2%) [NASS 2006]. Approximately, 113,398 metric tons of herbicide active ingredients (ai) are sold yearly in the United States. There are concerns about possible adverse impacts on the environment and human health from pesticide applications (Morozov et al. 1999). There is also a demand for alternatives to chemical control, especially among those interested in organic approaches. The use of thermal methods appears to be a good alternative because they do not produce chemical residues in the environment (Nelson 1985; Olsen and Hammer 1982).

Weed control using microwave radiation is a thermal method. Thermal control methods can be divided into two groups according to their mode of action: (a) direct heating methods using flame, infrared, hot water, steaming, or hot air and (b) indirect heating methods, which includes electrocution, microwaves, laser radiation and ultraviolet radiation. Flame-based direct thermal weed control involves the use of equipment to create direct contact between the flame and the plant. This technique kills weeds by rupturing plant cells when the sap rapidly expands in the cells, along with burning of the weed foliage. However, flaming may damage the crop (Hesammi and Moghaddam 2013). Flaming for weed control may prove to be less expensive than hand weeding (Vantine et al. 2003). Use of infrared systems are a further development of flame weeding in which the burners heat ceramic or metal surfaces to generate infrared radiation, which is directed at target weeds. Electrocution involves passing of very high voltage through weeds and lasers deliver a high level of radiant energy directly to weeds. Hot water treatment or steam applicators use water as a carrier to transfer heat energy to unwanted vegetation. Direct thermal methods of weed control have disadvantages that have prevented their general application in field conditions. Some have not been developed further because of their low efficiency, higher operating costs, or low work capacity (Melander 2006). It is difficult to compare the effect of different thermal methods because of the wide range of equipment used in experiments with varying doses and weed densities. Important information on equipment required, needed doses, and other application parameters is lacking in many cases (Ascard 1998).

One potential alternative is the use of microwave radiation, a particular form of indirect thermal weed control. The ability of microwave radiation to penetrate and couple with polar molecules such as water provides an excellent means of obtaining controlled and precise heating of undesired plants. Absorption of microwave radiation causes water molecules within the tissue to oscillate, thereby converting electromagnetic energy into heat. This technique is rapid, versatile and effective. Interest in preemergence weed control with microwave energy started in the early 1970s and hope of commercialization stimulated many experiments in the laboratory and in the field on the lethality of such exposures for various kinds of weed seed. Microwave radiation stimulates water molecules into resonance and the friction between adjacent molecules produces heat internally due to dielectric heating (Barker and Craker 1991; Davis et al. 1971; Diprose et al. 1984; Fujiwara et al. 1983; Mullin 1995 and Sartorato et al. 2006). Since this heating depends upon the dielectric properties of targeted material, there is a possibility of advantageous selective heating in mixtures of different plant species based on anatomy and age, for example. Factors such as size of seed and plants, shape, and moisture content are important. Microwave technology has been well adapted to kitchen uses but not to the agriculture sector due to limited research, safety concerns, and the lack of acceptable prototypes. For several years, scientists have been working to develop microwave applicators designed to eliminate pathogens and vegetation present in the ground (Vela´zquez-Martı´ 2003; Vela´zquez-Martı´ and Gracia-Lo´ pez 2004a, b). At least two prototype field microwave power applicators were built in the 1970s and tested for field uses (Anonymous 1973; Cundiff et al. 1974; Davis 1975; Wayland et al. 1973, 1978). An early prototype was equipped with four 1.5 kW, 2.45-GHz magnetrons, with speed set at 0.003 mile h^{-1} (0.005 km h^{-1}) provided by a cable winch, and with electric power supplied by a 20-kW gasoline-engine-driven generator (Cundiff et al. 1974). A later prototype had two 30 kW klystron magnetrons and was powered by a 155 kW diesel-powered generator (Anonymous 1973). Most recently, Graham Brodie of Melbourne University has adapted microwave technology, mounted on the back of a tractor-pulled trailer, to kill weeds and weed seed in grain crops as chemical spraying becomes increasingly ineffective due to herbicide resistance (RIRDC 2013). Four microwave panels, each capable of emitting two kilowatts of microwave radiation were mounted in a row on the back of his microwave radiation prototype. Apparently, the application was not deemed practical, because the anticipated marketing of the method and the equipment did not materialize. The objective of this research was to develop a prototype machine to deliver microwave radiation to emerged weeds, and to compare the effectiveness of the prototype to application of contact herbicides.

Materials and Methods

Initial Prototype. The first prototype was a modified version of the design built by the Department of Electrical Engineering at the University of Ljubljana, Slovenia, later shipped to the Department of Agriculture at the University of Padova, Italy, where it was tested by Professor Cesare De Zanche (Vidmar 2005). A prototype with 12 magnetrons (2.45 GHz, Model No. 2M246, LG, 10225 Willow Creek Road, San Diego CA 92131) each having an output power of 900 watt, was constructed at the Hampton Road Agricultural Research and Extension Center (HRAREC), Virginia Beach, Virginia. These magnetrons were used in series with tilted waveguides of dimensions 9.4 by 4.3 cm so that the total microwave irradiation period of individual weeds could be increased to deliver sufficient energy to cause plant death without sacrificing operational speed of the prototype (Fig. 1). Individual custom-made transmission waveguides were used to deliver the electromagnetic radiation produced by each magnetron with minimal transmission loss factors like interferences or heat losses. An individual power supply was used for each magnetron using a proper high voltage transformer, capacitor and diode. The power supply of each magnetron was a standard circuit (fig. 2). All these components were installed in a wooden case containing the twelve transmission waveguides fitted with magnetrons. This wooden box was insulated with aluminum adhesive tape to control any leaking microwave radiation, making it safe for field operation. Four height-adjustable wheels were installed on the wooden case to facilitate the mobilization of the prototype. A magnetron with frequency 2.45 GHz is approximately 65% efficient in microwave radiation production. The remaining energy (35%) was converted into heat that may damage magnetrons. Three cooling fans were installed on the wooden case to dissipate the heat generated during operation. Both side walls of the prototype were kept open during operation for better air circulation. Despite sufficient air circulation, 9 out of 12 magnetrons were damaged during field testing of the unit. This may be due to the close proximity of the magnetrons to each other, causing electromagnetic interference that damaged the magnetrons of the prototype microwave applicator. No data was therefore collected using this prototype.

Second Prototype. The second prototype was 60 cm in length, 47 cm wide and 60 cm in height. The prototype used in this investigation consisted of four magnetrons (Model No. 2M246, LG, 10225 Willow Creek Road, San Diego CA 92131), each capable of producing 900 watt of microwave radiation. Magnetrons and other electric parts used were extracted from working microwave ovens. Magnetrons were tested using the International Electrotechnical Commission standard (IEC-705) (James at al. 2002). Since September 1990, microwave oven manufacturers have adopted a single standard for measuring the power output for microwave ovens. This 1988 standard uses a1 L water load and the test is made using a cold oven in defined ambient conditions. In this methodology, cold (10 ± 2 C) potable water is heated in a glass container of certain parameters and the time to a 10 ± 2 C elevation of water temperature is measured. The microwave power absorbed in the water during the heating and used for its temperature elevation is calculated using the following equation.

$\Delta T = (P \times t)/(V \times cp \times \rho)$

where: ΔT – the increase of the mean temperature of the heated water (K),

P - microwave power used for heating (W),

V - volume (m^3),

cp - heat capacity (joules $kg^{-1}K^{-1}$),

ρ - density ($kg\ m^{-3}$),

t - time of heating (s)

One major reason to reduce the number of magnetrons was to reduce electromagnetic interference, which may have damaged the first prototype. Custom- made waveguides were made of stainless steel. Each wave guide was 40 cm in length and 10 cm wide. Four compartments were made using aluminum sheets, each 10 cm wide and 10 cm in length. A hole was drilled in each compartment, alternating from one side to the other for each magnetron (fig. 3a, b, c). The reason to use an alternate magnetron attachment pattern was to minimize electromagnetic interference due to the close proximity of magnetrons to each other. This design was expected to minimize electromagnetic interference as a portion of the microwave energy which reflected from the ceiling of the waveguide was diverted to a point forward of the location where direct microwave radiation hits the surface. Two magnetrons were bolted with screws on each side of the waveguides. These four magnetrons were properly wired with corresponding capacitors (Model No. CH2100954C8N, LG, 10225 Willow Creek Road, San Diego, CA 92131), diodes and high voltage transformers (Model No. CBJ72, Samsung, 85 Challenger Road, Ridgefield Park, NJ 07660) as per specifications provided by the manufacturer. Two 12 volt, inline fans, (Model No. Turbo-3000, Attwood, 1016 N. Monroe Street Lowell, MI 49331) capable of exhausting 90-120 CFM air, were attached to magnetrons on both sides of the waveguide. Each inline fan cooled two magnetrons during weed treatment. Each magnetron power supply was attached to a light indicator to ensure their proper operation. Four ten-amperage fuses were also used to protect magnetrons from electric surges. Two portable generators (Cummins Onan Pro 6000E, 6 kW, 60 Hz 1400 73rd Avenue N.E., Minneapolis, MN 55432), were used to supply electric power to this microwave applicator unit. A 115 volt geared motor capable of producing 44 N.mm torque, (Model No. 2Z797D, Dayton, 5959 W Howard St. Niles, IL 60714) was used to drive this prototype in the field. A potentiometer (Model No. 1LS1I1, Levitop, 20497 SW Teton Avenue Tualatin, OR 97062) was used to control the revolutions per minute of the geared motor. Total microwave irradiation period of a weed was controlled by regulating the speed of the geared motor.

Field testing of the second prototype. The total energy applied to weeds was calculated based on the speed of the microwave applicator unit. The microwave applicator delivered 45 joules cm^{-2} at a speed of 0.072 kilometer per hour (KPH), 72 joules cm^{-2} at 0.045 KPH, and 135 joules cm^{-2} at 0.024 KPH. The primary weed species at the field site were common bermudagrass, buckhorn plantain, common chickweed and henbit. The field sites were mowed to a height of 6.3 cm to maintain uniformity of biomass across treatments. The experimental design was a randomized complete block design with four replications and the study was repeated. Each plot was 2.4 m long and 1.2 m wide. Six treatments including a nontreated control were used in this study. Treatments were three doses of microwave radiation (45, 72 and 135 joules cm^{-2}), acetic acid (20% by weight), (Pharm Solutions, Inc. Terra Naturale LLC. Clearwater, Florida) applied at 49 kg ai ha^{-1} and diquat (Reward, Syngenta Crop Protection, LLC. P.O. Box 18300 Greensboro, NC

27409) at 0.6 kg ai ha^{-1}. Nonionic surfactant (X-77, Loveland Products Inc. PO Box 1286, Greeley, CO 80632) at the rate of 2.5 ml per liter was added to diquat treatments. A CO_2 pressurized backpack sprayer with flat fan nozzles (8002, Teejet, 200 W. North Ave Glendale Heights, IL 60139) was used for acetic acid and diquat treatment. Both acetic acid and diquat are contact herbicides in nature. The microwave applicator was pulled over each plot once with overlapping edges, using the high torque geared motor. A microwave-radiation leakage detector, (Model No. DT-2G, Shenzhen Everbest Machinery Industry Co., Ltd. 19th Building, 5th Region, Baiwangxin Industry Park,Baimang, Xili, Nanshan, Shenzhen, China P.C. 518108), with sensitivity range 0 to 9.99 mW cm^{-2} and a warning value set at 5.0 mW cm^{-2} was used to locate any microwave leakage during operations as well as to determine safe distances for human operator. Air temperature during treatment was 20 to 22 C and winds were 10 to 15 KPH from the northeast at the time of treatment. Plant injury determined visually at the scale of 0 to 100 was recorded at 1 and 2 weeks after treatment (WAT). Images of microwave irradiated plots were taken from at a height of one meter from the ground at 1 WAT. Collected images were analyzed for green color using image processing software (SigmaScan Pro 5, Systat software, Inc., 501 Canal Blvd Suite E, Point Richmond, CA 94804). Shoot fresh weight was recorded from a 929 cm^2 area of each plot at 2 WAT to avoid collecting data from newly-germinated weeds. Collected data were analyzed using statistical software (JMP 10, 100 SAS Campus Drive Building T Cary, NC 27513). A randomized complete block design with four replications for each treatment was used for this study. Tukey's HSD at the 0.05 level was used for mean separation. There were no significant differences between the first and second experiment so data was combined into one analysis. There was a significant interaction between treatments and weed species.

Results and Discussion

Second prototype. Among all four weed species, common chickweed had the highest injury (89%), followed by henbit (76%), and buckhorn plantain (71%), with the lowest injury in common bermudagrass (48%) when irradiated with 45 joules cm^{-2} of microwaves (Fig. 4). Common bermudagrass injury increased to 86% when irradiated with 72 joules cm^{-2} of microwaves. Injury to henbit (87%) and buckhorn plantain (91%) also increased when the microwave dose was increased to 72 joules cm^{-2}. Excellent control (>93%) was seen in all four weed species at 135 joules cm^{-2} of microwave radiation.

Diquat at the rate of 0.6 kg ai ha^{-1} controlled all treated weed species 89% or more, which was comparative to the 135 joules cm^{-2} of microwave treatment (Fig 4). Lowest injury was observed in common bermudagrass (68%) followed by henbit (73%), buckhorn plantain (83%) and the highest injury seen in common chickweed (86%) when treated with acetic acid at the rate of 49 kg ai ha^{-1} (Fig. 4). Acetic acid provided similar weed control as microwave radiation applied at 45 joules cm^{-2}. Microwave radiation applied at 72 and 135 joules cm^{-2} provided similar weed control as diquat. Microwave radiation at 45 joules cm^{-2} injured broadleaf weeds higher than common bermudagrass (Fig. 4). These differential responses of some weed species to microwave treatmentss suggest the possibility of selective weed control. Davis et al. (1971) reported similar results, as snap bean plants (*Phaseolus vulgaris* L.) were several times more susceptible to microwave treatment than honey mesquite (*Prosopis glandulosa* Torr.). Ascard (1995) and Wayland et al. (1975) reported grasses were more tolerant of microwave treatment than broadleaf weed species. The effect of a microwave treatment depends not only on the total energy of the microwave flux, but also on plant size and the orientation of the electrical field of the flux in relation to the soil surface and plant morphology.

There appeared to be more newly-emerging weed seedlings in plots treated with microwave radiation at 72 joules cm^{-2} in comparison to plots treated with 135 joules cm^{-2} (Fig. 5, 6). This might be due to most of the microwave energy at the lower dose being intercepted by the upper weed canopy, preventing microwave radiation from reaching weed foliage close to the soil surface. Another possible reason might be the cross sectional area of these newly-emerged weeds was too small at the time of treatments to interact with microwave radiation. Image analysis using SigmaScan Pro 5.0 showed only 0.1% green pixels in plot irradiated with 135 joules cm^{-2} in comparison to 1.8% green pixels in plot irradiated with 72 joules cm^{-2} at 1 WAT (Fig. 5, 6).

Modes of action of all the treatments including microwave radiation were contact in nature. Overall injury caused by microwave radiation at 45 joules cm^{-2}were not sufficient to provide satisfactory weed control (Fig. 4). Regrowth in all partially damaged weed species treated with microwave radiation at 45 joules cm^{-2} was observed. It seems that there is a certain threshold level of microwave energy needed to raise plant canopy temperature beyond biological limits. No regrowth was observed in weed species treated with microwave radiation at 135 joules cm^{-2} at 1 WAT (Fig. 6). Among all treatments, the lowest fresh shoot fresh weight (70 g) was recovered from weeds treated with the highest dose of microwave radiation (135 joules cm^{-2}), followed by plots treated with diquat (87 g) at 0.6 kg ai ha^{-1} (Table 1). Shoot weight of weeds treated with microwave radiation at 72 joules cm^{-2} was 93 g, a reduction similar to that seen with acetic acid (114 g) at 49 kg ai ha^{-1}. Weed shoot fresh weight (123 g) in plots treated with the lowest dose of microwave radiation (45 joules cm^{-2}) was not different from that in nontreated plots. As the microwave dose increased, shoot fresh weight decreased in a linear fashion (Y =

152.65477 – 0.6590042*X, $R^{2} =$ 0.531019). The low R^2 may be due to variation in weed density among treated plots.

Microwave efficiency could be increased by a flux configuration that minimizes soil penetration and interferences and maximizes absorption by plants, which, in turn, depends on plant anatomy (Sartorato et al. 2006). This second design minimized the electromagnetic interferences between the in microwave waveguides. This design minimized the microwave interference as a portion of the microwave radiation which reflected from the ceiling of the waveguide was diverted to a point forward of the location where direct microwave radiation hits the surface (Figure 3a). Direct microwave radiation come from the magnetron antenna and reflected microwave radiation from the ceiling/closed end of waveguide strike different parts of targeted weeds. Vela´zquez-Martı´ and Gracia-Lo´ pez (2004a) also worked on a microwave applicator design and found a prototype based on overlapping magnetrons appears to be more efficient than a single waveguide prototype, because it allows lethal temperatures to be reached in a shorter time. Existing magnetrons are designed for specific heating requirements in home appliances. Design of the microwave waveguide needs to be further investigated by engineers to meet the needs for weed management. This may lead to a totally redesigned magnetron and waveguide, specifically designed to meet the needs of the agriculture sector.

Acknowledgement

The authors want to thanks Adam Nicole, staff of Hampton Road Agricultural Research Station (HRAREC), for providing image analysis support to complete this study.

Literature Cited

Anonymous (1973) Electronic weed "zapper". Farm Industry News 6:27

Ascard J (1998) Comparison of flaming and infrared radiation techniques for thermal weed control. Weed Res 38:69-76

Ascard J (1995) Effects of flame weeding on weed species at different developmental stages. Weed Res 35:397-411

Barker AV, Craker LE (1991) Inhibition of weed-germination by microwaves. Agron J 83:302-305

Cundiff JS, Johnson AW, Flowers RA, Glaze NC (1974) Evaluation of microwave treatment of field soil for control of nematodes, soil fungi and weeds. St. Joseph, Mich.: Amer. Soc. Agrl. Eng. 74-1562

Davis F (1975) "Zapper " blasts weed seeds. NZ J Agric 131:53-54

Davis F, Wayland J, Merkle M (1971) Ultrahigh-frequency electromagnetic fields for weed control: phytotoxicity and selectivity. Sci 173:535–537

Diprose MF, Benson FA, Willis AJ (1984) The effect of externally applied electrostatic fields, microwave radiation and electric currents on plants and other organisms, with special reference to weed control. Botanical Rev 50:171–223

Fujiwara O, Goto Y, Amemiya Y (1983) Characteristics of microwave power absorption in an insect exposed to standing wave fields. Electronics and Communications in Japan 66:46–54

Hesammi E, Moghaddam PR (2013) Library research, some strategies for weed management in organic farming. Intl J Farming and Allied Sci. 96-101

International Electrotechnical Commission (1988) Methods for Measuring the Performance of Microwave Ovens for Household and Similar Purposes. IEC Publication 705-1988, 2nd ed. Geneva

James C, Swain MV, James SJ, Swain MJ (2002) Development of methodology for assessing the heating performance of domestic microwave ovens. International Journal Food Sci Technol 37:879–892

Melander B (2006) Current achievements and future directions of physical weed

Control in Europe. Third international conference on non-chemical crop protection methods. Lille, France. http://orgprints.org/9998/1/9998.pdf Accessed February 08, 2014

Morozov GA, Yu Sedelnikov E, Stakhova NE (1999) Microwave seeds treatment. Pages 193-196 *in* Proceedings of International Conference on Microwave and High Frequency Heating. Valencia, Spain. Mullin J (1995) Microwave processing. In: Gould, G.W. (Ed.), New Methods of Food Preservation. Blackie Academic and Professional. Bishopbriggs, Glasgow. p. 112-134

NASS (2006) National Agricultural use database. http://www.pestmanagement.info/nass/act_dsp_usage_multiple.cfm. Accessed February 11, 2014

Nelson SO (1996) A review and assessment of microwave energy for soil treatment to control pests. Trans ASAE 39:281-289

Nelson SO (1985) RF and microwave energy for potential agricultural applications. J Microwave Power 20:65–70

Olsen RG, Hammer WC (1982) Thermo graphic analysis of waveguide-irradiated insect pupae. Radio Sci. 17:95–104

Rural Industries Research and Development Corporation (RIRDC) (2013) http://www.rirdc.gov.au/news/2013/01/07/microwaves-to-deliver-chemical-free-weed-control. Accessed February 03, 2014

Sartorato I, Zanin G, Baldoin C, Zanche CD (2006) Observations on the potential of microwaves for weed control. Weed Res 46:1-9

VanTine M, Verlinden S, McConnell T (2003) Organic weed management. Extension service. West Virginia University. http://www.wvu.edu/~agexten/farmman/organic/weedmang.pdf. Accessed February 05, 2014

Vela´ zquez-Martı´ B, Gracia-Lo´ pez C (2004a) Evaluation of two microwave superficial distribution systems designed for substratum and agricultural soil disinfection. Spanish J Agric Res 2:323-331

Vela´ zquez-Martı´ B, Gracia-Lo´ pez C (2004b) Thermal Effects of Microwave Energy in Agricultural Soil Radiation. Intl J Infrared and millimeter Waves 25:1109-1122

Vela´ zquez-Martı´ B, Osca JM, Jorda´ C, Marzal A (2003) Estudio de la viabilidad de la eliminacio´n de semillas de malas hierbas en el suelo por radiacio´n de microondas. Ministerio de Agricultura Pesca y Alimentacio´n. Boletı´n de Sanidad Vegetal. 129:49–55

Vidmar M (2005) An improved microwave weed killer. Microwave Journal October 1, 2005. http://typnet.net/Articles/WeedKiller.pdf Accessed February 05, 2014

Wayland, JR, Davis FS, Merkle MG (1978) Vegetation control. U. S. Patent No. 4,092,800. http://www.google.com/patents/US4092800 Accessed February 06, 2014

Wayland JR, Merkle MG, Davis FS, Menges RM, Robinson R (1975) Control of weeds with UHF electromagnetic fields. Weed Res 15:1-5.

Wayland JR, Davis FS, Merkle MG (1973) Toxicity of an UHF device to plant seeds in soil. Weed Sci 21:161-162

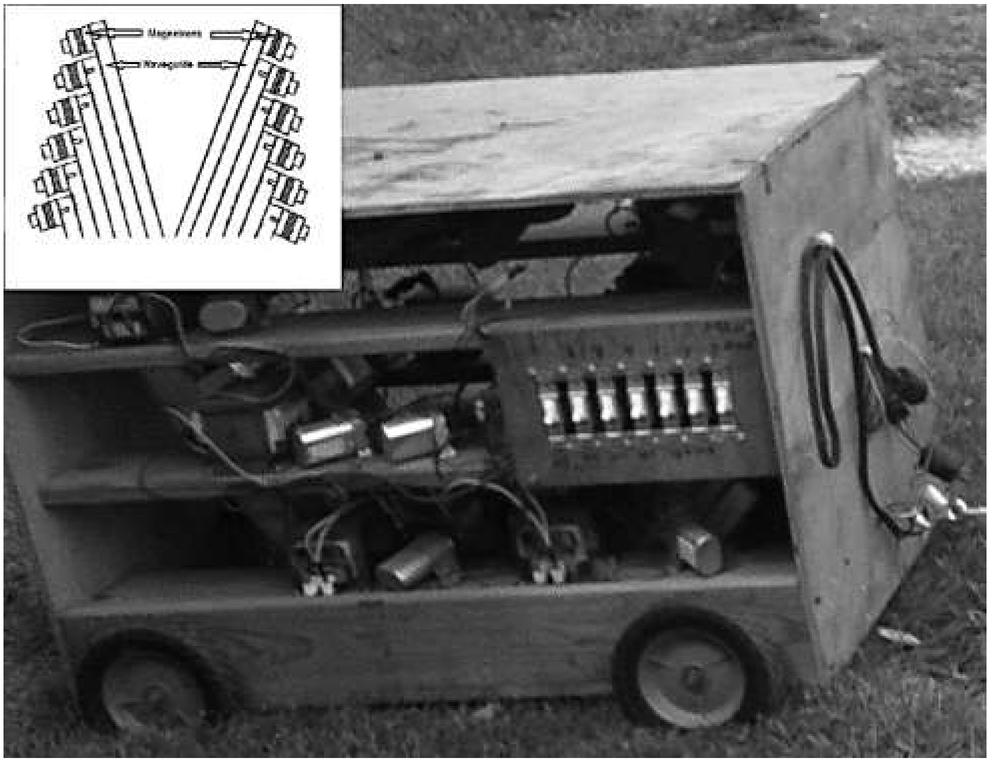

Figure 1. A picture of the original prototype of a microwave applicator consisting of twelve magnetrons.

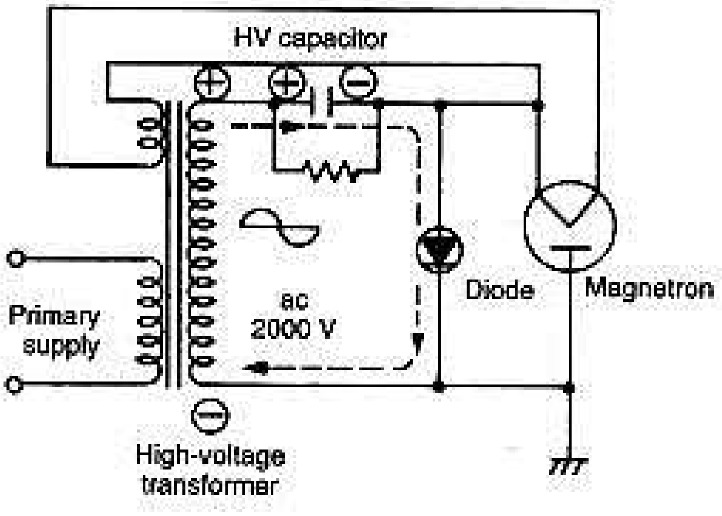

Figure 2. Electric circuit diagram for microwave applicator used for the field weed control trials.

Figure 3a (Side view)

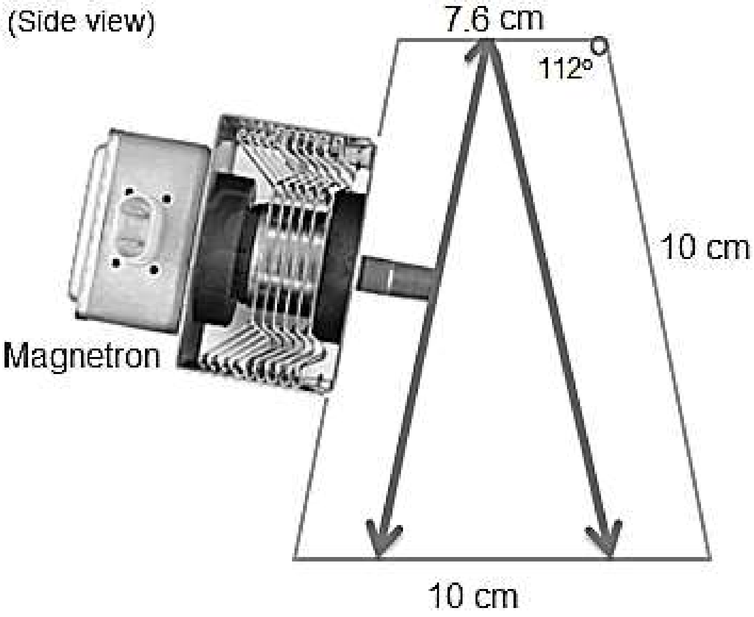

Figure 3b (Top view)

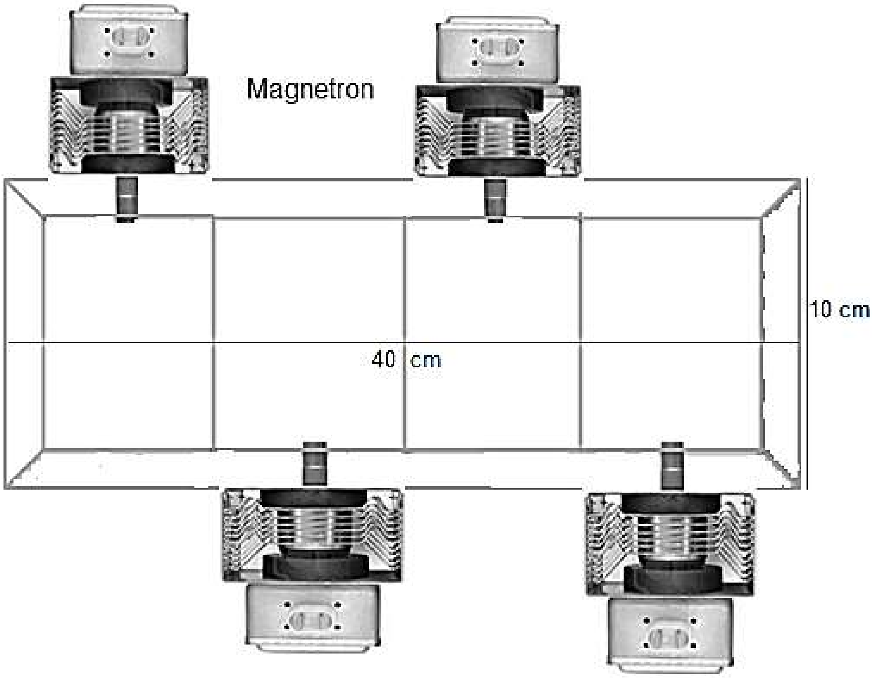

Figure 3c (Photograph)

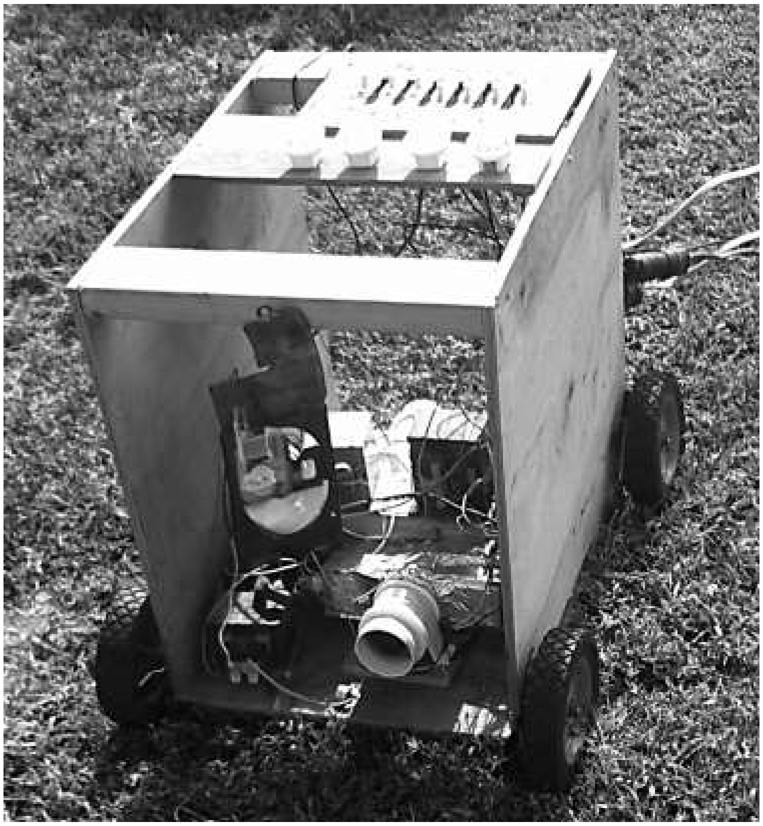

Figure 3a, b, c. Design and photograph of the second prototype microwave applicator used for the field weed control trials.

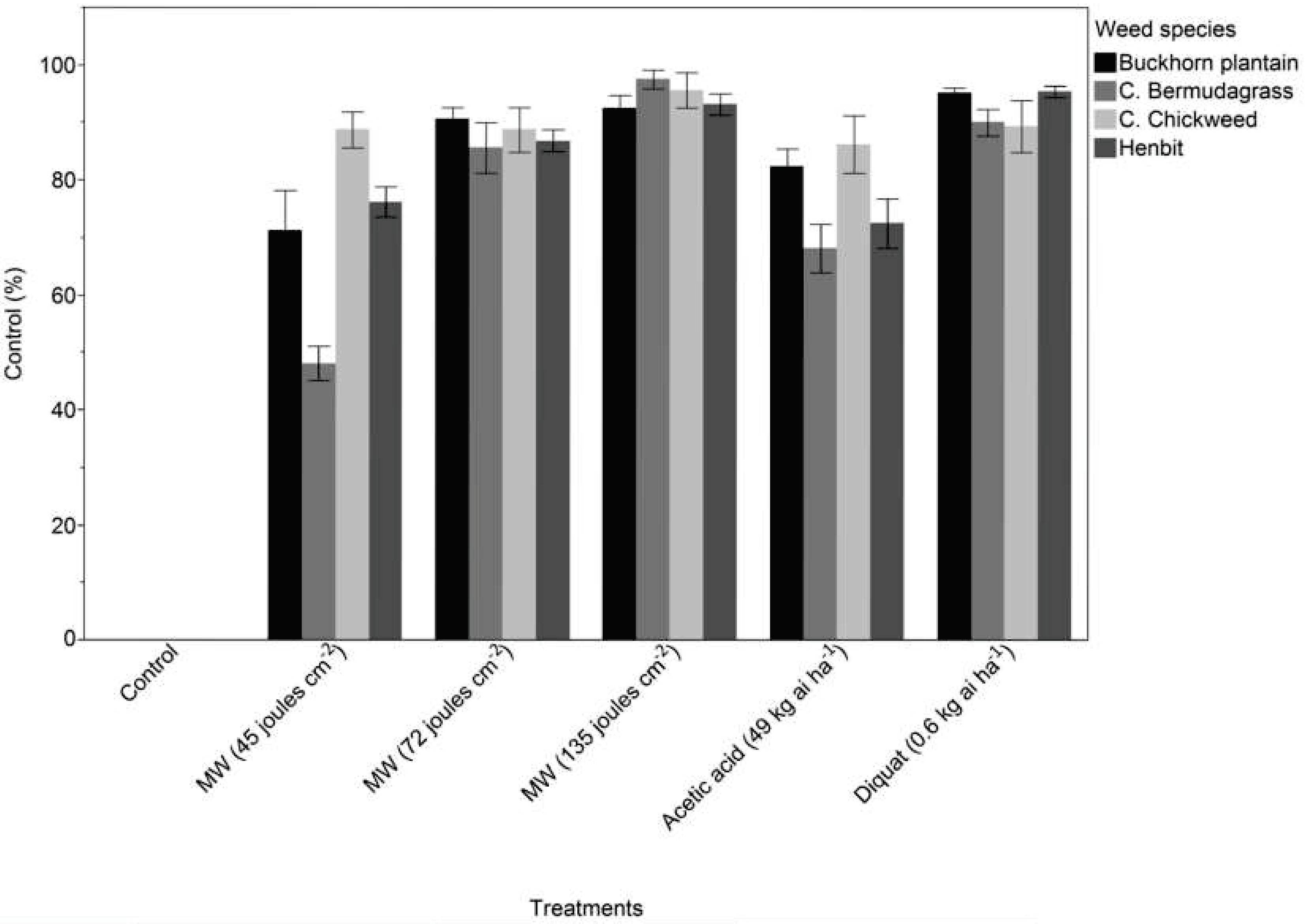
Control (%)
0
20
40
60
80
100
Treatments
Control
MW (45 joules cm^{-2})
MW (72 joules cm^{-2})
MW (135 joules cm^{-2})
Acetic acid (49 kg ai ha^{-1})
Diquat (0.6 kg ai ha^{-1})
Weed species
Buckhorn plantain
C. Bermudagrass
C. Chickweed
Henbit

Figure 4. Control of buckhorn plantain, common bermudagrass, common chickweed and henbit using microwave radiation (45, 72 and 135 joules cm^{-2}), acetic acid (49 kg ai ha^{-1}) and diquat (0.6 kg ai ha^{-1}) at 1 WAT in field trials. Error bars indicate standard errors.

Table 1. Shoot fresh weight recorded from a 929 cm^2 area of each field plot treated with microwave radiation (45, 72, 135 joules cm^{-2}), acetic acid (49 kg ai ha^{-1}) and diquat (0.6 kg ai ha^{-1}) at 2 WAT.

Treatments	**Dose**	**Units**	**Shoot fresh weight (g)**	
Nontreated			159	A*
Microwave radiation	45	joules cm^{-2}	123	AB
Microwave radiation	72	joules cm^{-2}	93	BC
Microwave radiation	135	joules cm^{-2}	70	C
Acetic acid	49	kg ai ha^{-1}	114	B
Diquat	0.6	kg ai ha^{-1}	87	BC

* Means with the same letter are not significantly different according to Tukey's HSD ($\alpha = 0.05$).

Figure 5. A photograph at 1 WAT of a weed-infested plot treated with 72 joules cm^{-2} of microwave energy.

Figure 6. A photograph at 1 WAT of a weed-infested plot treated with 135 joules cm^{-2} of microwave energy.

Conclusions

Use of microwave radiation is a potential alternative method of weed control to herbicide application as well as other conventional thermal methods such as flaming or use of steam. However, little research has been published on the factors impacting use of microwaves for postemergence weed control. The technology has not been adapted to the agriculture sector due to limited research, safety concerns, and the lack of acceptable prototypes. There is a lag or warm period between energizing the magnetron and actual microwave radiation production of up to 3 seconds. This lag time depends upon many factors, including temperature of the magnetron, and can cause errors in calculation of actual energy needed for weed management. Most researchers used custom-built stationary units of a microwave applicator in their trials. Most researchers either didn't take into consideration this gap in microwave energy production when using a stationary unit for their respective experiments or chose not to include it in their calculations. To eliminate the gap between energizing the magnetron and actual microwave radiation produced, a conveyer was used to move potted plants through a continuous microwave radiation field. There was a significant improvement in precision for calculations of total energy required for weed control using the conveyer system. Microwave-irradiated weeds showed more uniform thermal injury and greater control using the conveyer system than a stationary microwave application mode. Distribution of microwave energy was therefore comparatively more uniform with the conveyer system. Use of the conveyer resulted in a more realistic simulation of a field microwave applied compared to microwaves applied via a stationary mode. Microwave radiation was able to control a range of weed species, although larger weeds were more likely to regrow after treatment. Greater microwave energy is therefore needed when treating larger plants. To optimize weed control, microwave radiation should be applied to weeds shorter than 10 cm.

Ambient temperature had a significant effect on injury caused by microwave radiation to target weed, with control increasing as the air temperature increased from 13 C to 35 C. Use of microwave radiation for weed control would be more useful in warmer parts of the country, or during the summer compared to winter. Microwave radiation injured broadleaf weeds comparatively more than grasses. Overall, grasses recovered more frequently from microwave injury than broadleaf weeds, probably due to their anatomy. The growing point of grasses is near the soil surface, harder to be reached by microwave radiation compared to broadleaf plants, where the growing point is more exposed. Since this heating depends upon the dielectric properties of the targeted material, there is a possibility of advantageous selective heating in mixtures of different plant species based on anatomy and age. In preliminary studies, all three applied doses of microwave radiation (45, 63 and 81 joules cm^{-2}) using a stationary microwave applicator, damaged pitted morningglory significantly more than bermudagrass. In another experiment, bermudagrass infested with yellow woodsorrel and common chickweed was irradiated with 54, 90, 126 and 162 joules cm^{-2} of microwave radiation using a mobile microwave applicator. At the lowest dose of 54 joules cm^{-2} of microwave radiation, common chickweed and yellow woodsorrel were injured more than bermudagrass, suggesting the potential for selective weed control in certain situations. Microwave-irradiated plants with rhizomes or stolons, like bermudagrass, are more likely to recover from any foliar damage, providing the basis for selectivity. A custom built microwave applicator provided similar control of emerged weeds as the contact herbicides diquat and acetic acid. Microwave radiation applied at the rate of 72 joules cm^{-2} controlled weeds more effectively than acetic acid at the rate of 49 kg ai ha^{-1}. Microwave radiation applied at the rate of 135 joules cm^{-2} controlled weeds comparable to diquat at the rate of 0.6 kg ai ha^{-1}, with both treatments providing 90% control. Weed control was unacceptable with 45 joules cm^{-2} of microwave treatment. If the proper dose of microwave radiation can be applied with a reasonable amount of energy generation required, then there is potential for microwave radiation to be a practical method of wed control.

Energy Requirement

The effect of a microwave treatment depends not only on the total energy of the microwave flux, but also on plant size and the orientation of the electrical field of the flux in relation to the soil surface and plant morphology. Microwave efficiency could be increased by a flux configuration that minimizes soil penetration and interferences and maximizes absorption by plants. The authors estimated microwave energy densities of 72 to 135 joules cm^{-2} were required for acceptable weed control in postemergence trials, which is equivalent to 72×10^8 to 135×10^8 joules ha^{-1}. Hypothetically, a 60 horsepower diesel tractor is capable of delivering 53.1 to 56.8 horsepower (39,600 to 42,400 W) at the PTO outlet while consuming 14 liters hr^{-1} of fuel (Tractor Museum 1995). Thus, a tractor of that size would be capable of running approximately 28 magnetrons simultaneously, covering a 2.8 meters wide strip. That microwave applicator would have to cover a linear distance of 3,571.4 meters/ha. It would take 79.4 and 148.8 hours ha^{-1} for the tractor to apply 72 and 135 joules cm^{-2} of microwave energy, respectively. Total fuel consumption would be 1111.1 liters of diesel to irradiate 72 joules cm^{-2} and 2,083.2 liters of diesel to irradiate 135 joules cm^{-2} of microwave energy. Diesel fuel cost would be \$ 802.8 to irradiate at the rate of 72 joules cm^{-2} and \$ 1,499.9 to irradiate at the rate of 135 joules cm^{-2}, using a diesel fuel cost of \$ 0.72/liter.

This appears to be a very high energy requirement. But it is comparable in cost to hand weeding or even solarization. Winter and Wiese in 1982 estimated hand-weeding cost in sugar beets to be \$1,077 ha^{-1}. One can assume that the cost today would be much higher. Karen Klonsky (2015) estimated hand weeding costs to be \$614 ha^{-1} for organic tomato production and \$4,554 ha^{-1} for strawberry production. Even soil solarization costs on an average of \$150 to \$300 convert to be ha dollars per row of crop application in a warm climate (Stapleton et al. 2005). Solarization is useful in controlling annual weeds, but it is not effective against perennials (Jacobsohn, et al. 1980).

Future Research

Energy cost evaluations indicated that increased efficiency is required for this technique to compete with other thermal methods and with contact postemergence herbicide use. Microwave efficiency could be increased by a flux configuration that minimizes soil penetration and maximizes absorption by plants. Postemergence weed control could be achieved using an appropriate design of a microwave applicator. Selective weed control potentially could be achieved between different plant species by applying a lower dose of microwave radiation. Existing magnetrons are designed for specific heating requirements of home appliances or other non-agricultural uses. Unfortunately, existing magnetrons do not provide control over the intensity of microwave radiation. The power level is adjusted by controlling the on and off time periods of magnetrons. Penetration depth of microwave radiation is frequency dependent. Therefore, redesigning magnetrons to be capable of producing variable frequencies could solve the higher energy requirement for microwave applicators for weed management. A redesign of magnetrons and microwave waveguide would be beneficial although challenging, but needs to be further investigated by engineers to meet the needs of the agriculture sector for weed management. This is a potential area where future research efforts need to be directed, as an investment of resources with a multidisciplinary approach will be needed to develop this kind of microwave applicator for weed management. Until then, application of microwave radiation for preemergence and postemergence weed management will remain in an experimental stage.

Literature Cited

- Jacobsohn R, Greenberger A, Katan J, Levi M, Alon H (1980) Control of Egyptian Broomrape (*Orobanche aegyptiaca*) and Other Weeds by Means of Solar Heating of the Soil by Polyethylene Mulching. Weed Sci. 28:312-316
- Klonsky K (2015) Comparison of Production Costs and Resource Use for Organic and Conventional.Production Systems. http://aic.ucdavis.edu/publications/NRCSKlonskypaper.pdf, Accessed July 20, 2015.
- Museum, Tractor (1995) Test 1703: Ford 4630 16x8 Diesel 16-Speed (Chassis S/N BD81699 and Higher). Nebraska Tractor Tests. http://digitalcommons.unl.edu/tractormuseumlit/2012. Accessed July 20, 2015
- Stapleton J, Elmore CL, DeVay JE (2005) Solarization and Biofumigation Help Disinfect Soil. CalAg. 54:5
- Winter SR, Wiese AF (1982) Economical Control of Weeds in Sugar beets. Weed Sci. 30:620-623